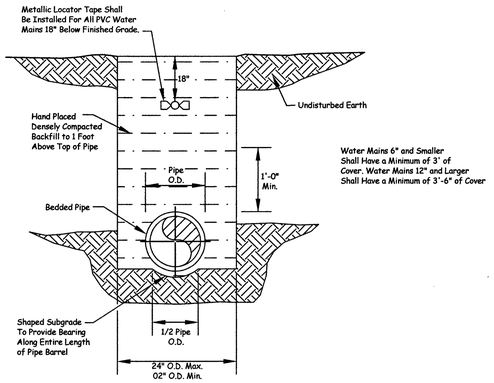

Water Mains 6" and Smaller Shall Have a Minimum of 3' of Cover. Water Mains 12" and Larger Shall Have a Minimum of 3'-6" of Cover

Water Main Embedment Section

Not to scale

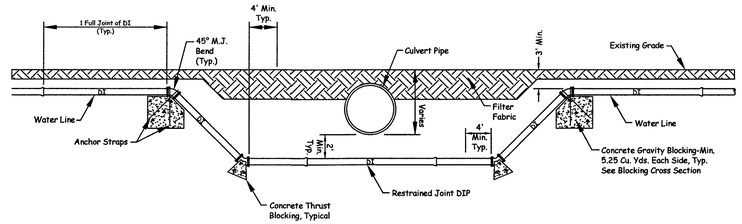

Notes:
1. Only Full 18' or 20' Joints of Ductile Iron Pipe Shall Be Used on Each Side of Upper Bends, Unless Otherwise Approved.
2. If Approved For Use Restraining Rods Shall Be Stainless Steel or Galvanized Rods With Field-Applied Bituminous Coating.
3. Pipe Upstream and Downstream of Upper Bends, Under Creek and Between Upper Bends To Be D.I.P.

Water Main With Culvert Crossing Detail

Not to Scale

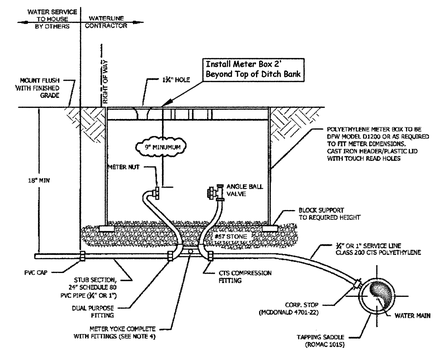

NOTE:
1. CONTRACTOR SHALL PLACE METER BOX IN NON-TRAFFIC AREA ONLY.
2. ALL TAPS TO BE MADE ON THE TOP QUARTER OF THE WATER MAIN.
3. CONTRACTOR SHALL CENTER METER YOKE IN METER BOX.
4. MCDONALD 35-702WX20 33 (¾")
   MCDONALD 35-410WX20 44 (1")
5. BOX TO BE ADJUSTED VERTICALLY TO ACCEPT COUNTY'S STANDARD SERVICE METER. (NEPTUNE T-10, PRO HEAD REGISTER, R900 MIU)
6. METER TO BE SET BY COUNTY UPON RECEIPT OF WATER SERVICE FEES, AND SATISFACTORY INSPECTION OF WATER SERVICE TO HOUSE.
7. TAPS ON WATER MAINS LARGER THAN 18" SHALL BE MADE WITH DUAL WIDE BAND, STAINLESS STEEL TAPPING SADDLES (ROMAC 202S).

Standard Water Service Detail
Pender County Utilities (Version #2 - Feb. 2013)

Not to Scale

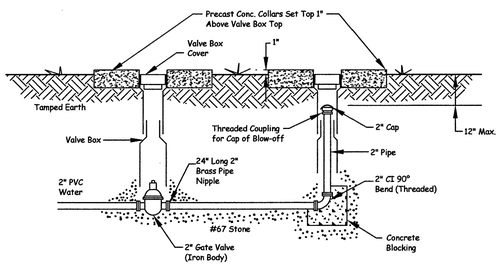

Note:
No Plastic or Galvanized Screw Fittings Before Valve.

2" Blow-off Assembly Detail

Not to scale

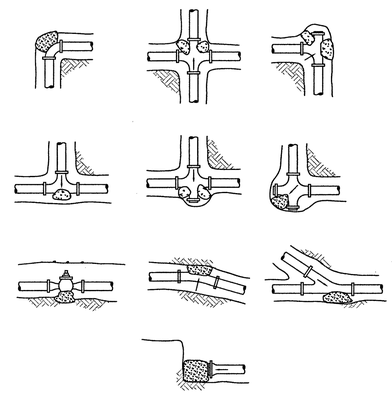

Note: All Blocking to be 2500 Lb. Concrete

Typical Blocking Details

Not to Scale

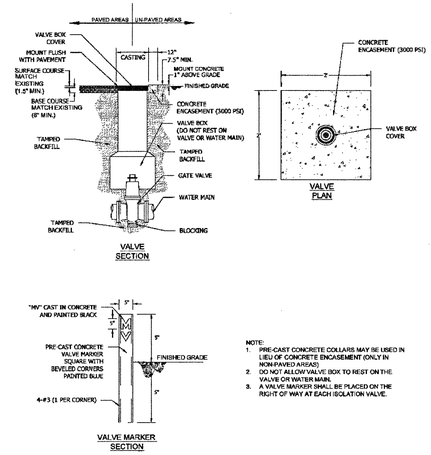

NOTE:
1. PRE-CAST CONCRETE COLLARS MAY BE USED IN LIEU OF CONCRETE ENCASEMENT (ONLY IN NON-PAVED AREAS).
2. DO NOT ALLOW VALVE BOX TO REST ON THE VALVE OR WATER MAIN.
3. A VALVE MARKER SHALL BE PLACED ON THE RIGHT OF WAY AT EACH ISOLATION VALVE.

Valve Installation Detail
Pender County Utilities (Version #1 - August 2010)

Not to Scale

Concrete Thrust Blocking Schedule									Concrete Schedule Vertical Bends		
Fitting Size	Blocking Area (Sq. Ft.)				Min. Cu. Yds. Concrete				Min. Cu. Yds. Concrete		
	TEE	90°	45°	22 1/2°	TEE	90°	45°	22 1/2°	90°	45°	22 1/2°
4"	0.8	1.2	0.7	0.3	0.13	0.13	0.13	0.13	0.7	0.4	0.3
6"	1.9	2.7	1.5	0.8	0.13	0.13	0.13	0.13	1.3	0.9	0.5
8"	3.3	4.8	2.5	1.3	0.13	0.13	0.13	0.13	2.5	1.7	0.9
10"	5.2	7.3	4.0	2.0	0.13	0.3	0.13	0.13	2.5	2.8	1.5
12"	7.6	10.6	5.9	2.9	0.3	0.4	0.3	0.13	5.6	4.0	2.1
16"	13.3	18.9	10.2	5.2	0.5	0.9	0.4	0.13	9.8	7.1	3.7
18"	22.5	32.8	17.3	8.9							

Note:
Areas of blocking and approximate yards of concrete in the above table are based on the following data: 2000# soil pressure and test pressure at 150 p.s.i. (blocking area subject to change based on varied soil conditions and shall be done so at the direction of the Engineer).

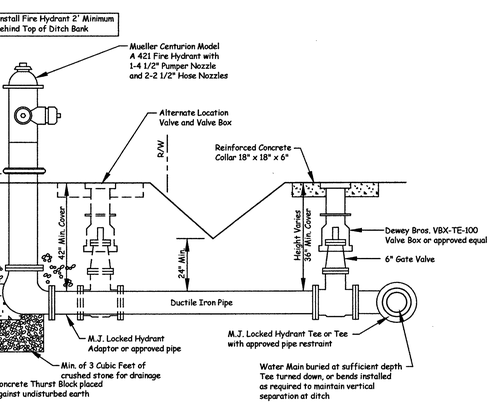

Typical Fire Hydrant with Ditch Crossing

Not to Scale

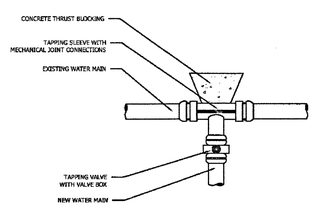

Tapping Sleeve and Valve Assembly Detail
Pender County Utilities (Version #1 - June 2011)

Not to Scale

Field Book: Island Creek, Pg. 1-13. Island Creek 2 Pg. 1-7
Data Collector: ISLAND CREEK, ISLAND CREEK 2, ISLAND CREEK 3, ISLAND CREEK 4, ISLAND CREEK 5, ISLAND CREEK 6, ISLAND CREEK 7, ISLAND CREEK 8
Disk Name: Acad #2501
Filename: IC-Preliminary Gen.dwg BLD
Job No.:S140217-5746

NORTH CAROLINA PROFESSIONAL SEAL 34978 ENGINEER JASON N. HOUSTON
12/10/14

Water Detail Sheet

THE RESERVE
ON ISLAND CREEK

Topsail Twp., Pender Co., North Carolina

Owner/Developer:
IC3 Partners, LLC
PO Box 7122
Jacksonville, NC 28541
(910) 455-6956

DATE: 10/17/14

SCALE: As Noted

Parker & Associates, Inc.
Consulting Engineers - Land Surveyors - Land Planners
P.O. Box 976 - 28541-0976
306 New Bridge Street - 28540
Jacksonville, North Carolina
Phone (910) 455-2414 - Fax (910) 455-3441
Firm License Number: F-0108

Rev. 12/09/14 BLD - Remove Bore Detail and Revise Owner

Z:\Land Projects 3\Island Creek\dwg\IC-Gen.dwg, 12/9/2014 4:44:44 PM, BLD