S:\6525\0004\80-Drawings\SF1 2016 Phase 1B, 2, 3 Cons DWGS\CU503_065250004.dwg,
5/17/2016 12:22:20 PM, mbrown1, 1:1

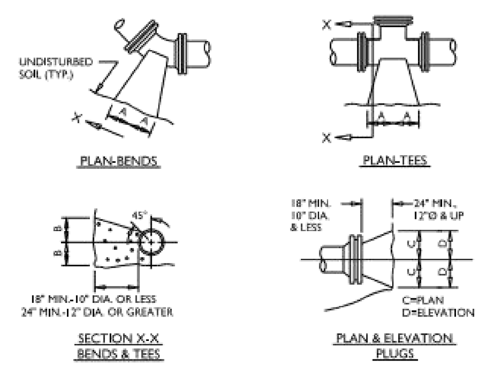

PIPE SIZE	90° BEND A	90° BEND B	45° BEND A	45° BEND B	22-1/2° BEND A	22-1/2° BEND B	11-1/4° BEND A	11-1/4° BEND B	TEE A	TEE B	PLUG C	PLUG D
4"	18"	12"	10"	13"	7"	10"	7"	10"	12"	14"	13"	6"
6"	18"	12"	10"	13"	7"	10"	7"	10"	12"	14"	19"	9"
8"	24"	18"	13"	18"	10"	12"	10"	12"	16"	18"	25"	11"
10"	28"	22"	15"	22"	12"	15"	12"	15"	20"	22"	31"	14"
12"	32"	28"	19"	28"	14"	18"	14"	18"	22"	28"	37"	17"
16"	54"	38"	30"	36"	18"	36"	18"	36"	36"	42"	54"	24"

ASSUME 2000 PSF SOIL (SAND & GRAVEL WITH CLAY)

NOTES:

1. BASED ON 200 PSI STATIC PRESSURE PLUS AWWA WATER HAMMER ALLOWANCE.
2. ALL BEARING SURFACES TO BE CARRIED TO UNDISTURBED GROUND.
3. THRUST BLOCKS TO BE USED AT ALL LINES OPERATING UNDER PRESSURE.
4. CONCRETE SHALL NOT CONTACT BOLTS OR MECHANICAL FITTINGS.
5. CONCRETE SHALL BE 3000 PSI.
6. TRENCHES SHALL CONFORM WITH STANDARD EMBEDMENT DETAIL.
7. ALL BENDS AND INTERSECTIONS SHALL HAVE CONCRETE THRUST BLOCKING.
8. SEE STD. THRUST BLOCK SHEET 2 OF 4 FOR OTHER SOILS.

PSD NO. 1 - THRUST BLOCKING DETAIL

NOT TO SCALE

REACTION BEARING AREAS FOR HORIZONTAL WATER/SEWER PIPE BENDS

BASED ON TEST PRESSURE OF 200 P.S.I.

ALL AREAS GIVEN IN SQUARE FEET.

SIZE AND DEGREE OF BEND	STATIC THRUST IN POUNDS	MODERATELY DRY CLAY 4000 LBS/FT²	SOFT CLAY 2000 LBS/FT²	GRAVEL / COARSE SAND 1600 LBS/FT²	DRY CLAY- ALWAYS DRY 8000 LBS/FT²	SAND- COMPACT FIRM 8000 LBS/FT²	SAND- CLEAN DRY 4000 LBS/FT²	QUICKSAND- VERY POOR SOIL 1000 LBS/FT²	ROCK - POOR 10,000 LBS/FT²
6"									
11 1/4°	1,108	1	1	1	1	1	1	2	1
22 1/2°	2,207	1	2	2	1	1	1	3	1
45°	4,328	2	3	3	1	1	2	5	1
90°	7,996	2	4	5	1	1	2	8	1
PLUG	5,655	2	3	4	1	1	2	6	1
8"									
11 1/4°	1,970	1	1	2	1	1	1	2	1
22 1/2°	3,922	1	2	3	1	1	1	4	1
45°	7,694	2	4	5	1	1	2	8	1
90°	14,215	4	8	9	2	2	4	15	2
PLUG	10,053	3	5	6	2	2	3	10	1
12"									
11 1/4°	4,433	2	3	3	1	1	2	5	1
22 1/2°	8,826	3	5	6	2	2	3	9	1
45°	17,312	5	9	11	3	3	5	18	2
90°	31,983	8	16	19	4	4	8	32	4
PLUG	22,619	6	12	14	3	3	6	23	3
16"									
11 1/4°	7,881	2	4	5	1	1	2	8	1
22 1/2°	15,691	4	8	10	2	2	4	16	2
45°	30,779	8	16	19	4	4	8	31	4
90°	56,861	15	29	35	8	8	15	57	6
PLUG	40,213	10	21	25	5	5	10	41	5

REACTION BEARING AREAS ARE IN SQUARE FEET MEASURED IN A VERTICAL PLANE IN THE TRENCH SIDE AT AN ANGLE OF 90° TO THE THRUST VECTOR.

USE 6" - 90° BEND VALUE FOR HYDRANTS FOR ADDITIONAL SAFETY FACTOR.

PSD NO.2 - THRUST BLOCKING DESIGN QUANTITY TABLE

NOT TO SCALE

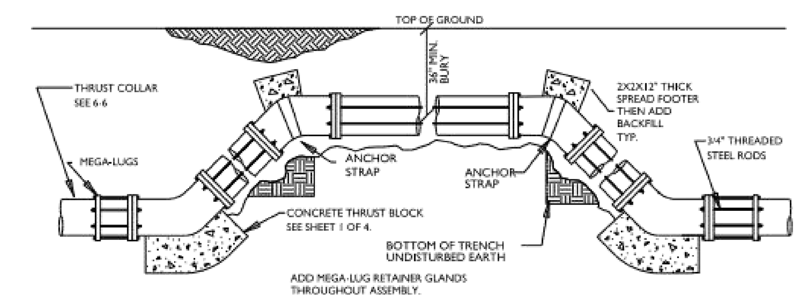

ROD REQUIREMENTS

SIZE OF 45 BEND	STATIC THRUST IN POUNDS	NO. OF RODS REQUIRED
6"	4,328	4
8"	7,694	4
12"	17,312	4
16"	30,779	8
24"	69,252	8

GENERAL NOTES:

1. STEEL RODS AND BOLTS SHALL BE 3/4" HOT OR COLD DIPPED GALVANIZED.
2. CONCRETE SHALL NOT CONTACT BOLTS OR ENDS OF MECHANICAL JOINT BENDS.
3. MEGA-LUGS TO BE USED AT ALL FITTINGS.
4. MUST USE DUCTILE IRON EYE BOLTS WHERE NECESSARY.

PSD NO. 3 - VERTICAL BEND DETAIL

NOT TO SCALE

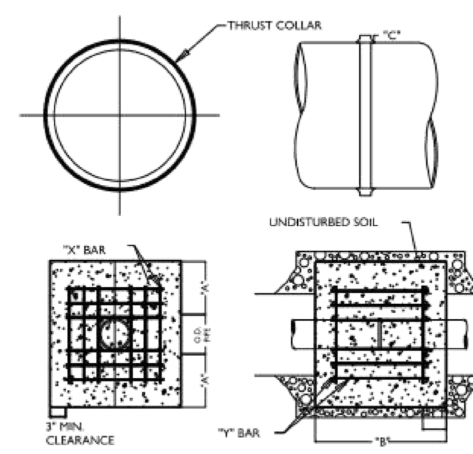

REINFORCING REQUIREMENTS

I.D. PIPE	REBAR SIZE	"X" BAR LENGTH	"X" BAR WEIGHT	"Y" BAR LENGTH	"Y" BAR WEIGHT	NO. REQUIRED
6" - 36"	#5	2'-2"+ O.D. PIPE	1.043 LBS/FT	1'-1"	1.1 LBS. EACH	X-24, Y-12
48" & greater	#6	3'-0"+ O.D. PIPE	1.502 LBS/FT	1'-3"	1.9 LBS. EACH	X-24, Y-12

THRUST COLLAR, AND THRUST SCHEDULE

I.D. PIPE	"A"	"B"	"C-6"-16", 20"-24", 30"-36", 48"
6" - 36"	1'-4"	1'-7"	2" 3" 4"
48" & greater	1'-8"	1'-9"	6"

NOTES:
1. CONCRETE SHALL BE 3000 PSI AND TRANSIT MIXED.
2. REINFORCING BARS SHALL BE DEFORMED AND TIED TOGETHER.
3. TRENCH BOTTOM WIDTH IN VICINITY OF THRUST BLOCK INSTALLATION SHALL BE THE MINIMUM WIDTH AS SHOWN ON STANDARD EMBEDMENT DETAIL.
4. BACKFILL TAMPED IN 6" LIFTS PER STANDARD EMBEDMENT DETAIL.
5. THRUST COLLAR MUST BE FACTORY WELDED ON BOTH SIDES ALONG BOTH EDGES OF COLLAR AROUND CIRCUMFERENCE.

PSD NO. 4 - THRUST COLLAR DETAIL

NOT TO SCALE

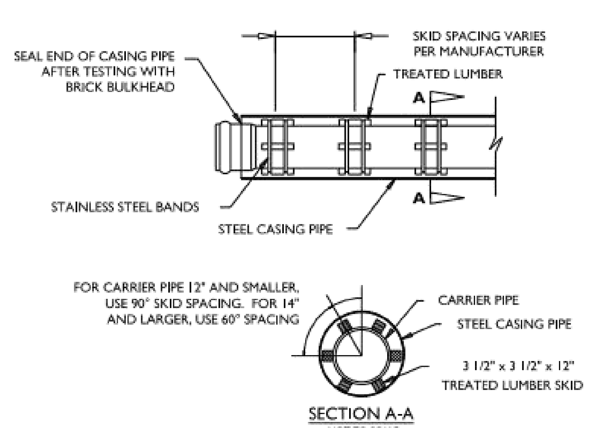

NOTES:
1. SKID TO BE PLACED TO PROVIDE PROPER SUPPORT, ALIGNMENT, AND GRADE AS SPECIFIED. CONTINUOUS SKIDS MAY BE USED AS ALTERNATIVE. 2. OIL, GREASE, OR PETROLEUM PRODUCT MAY NOT BE USED AS LUBRICANT.
3. CASING PIPE TO BE OF FERROUS METAL AND HAVE A MINIMUM DIAMETER TWICE THATOF THE CARRIER PIPE.
4. CASING PIPE TO HAVE A MINIMUM THICKNESS OF .25".
5. FOR ALL BORES UNDER NCDOT RIGHT OF WAYS FOLLOW ALL NCDOT GUIDELINES FOR PIPE SIZE AND THICKNESS.

PSD NO. 5 - PIPE CASING DETAIL

NOT TO SCALE

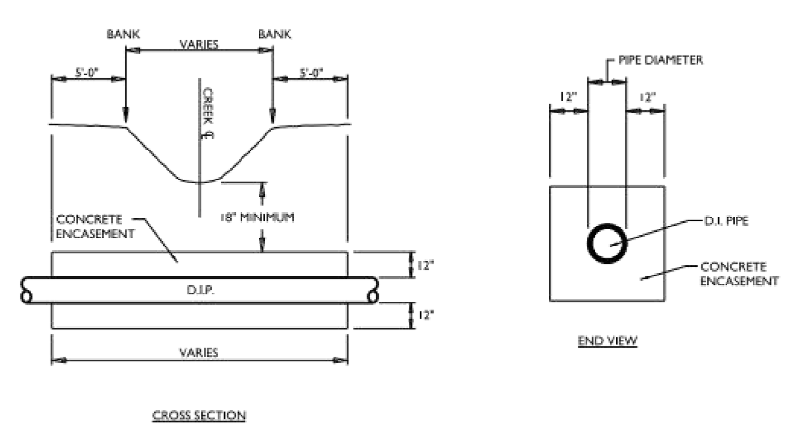

NOTES:

1. CONCRETE SHALL BE 3,000 P.S.I.
2. CONCRETE ENCASEMENT NOT REQUIRED WHEN PIPE IS AT LEAST THREE (3) FEET UNDER CENTERLINE OF CREEK BOTTOM.
3. ALL STREAM CROSSINGS TO BE PERMITTED BY NCDENR.
4. ALL WETLAND CROSSINGS AND COASTAL WETLAND CROSSINGS TO BE PERMITTED BY ALL APPROPRIATE AGENCIES.

PSD NO. 6 - STREAM/WETLAND CROSSING DETAIL DETAIL

NOT TO SCALE

CASING PIPE SIZE (O.D.)	WALL THICKNESS
4" - 12 3/4"	0.250"
16"	0.250"
18"	0.250"
20"	0.250"
24"	0.250"
30"	0.312"
36"	0.375"
48"	0.500"

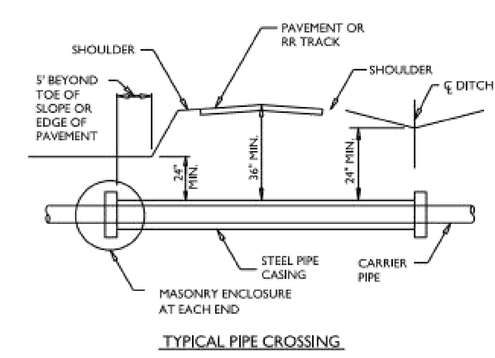

TYPICAL PIPE CROSSING

ENCASEMENTS SHALL EXTEND FROM DITCH LINE TO DITCH LINE IN CUT SECTIONS, FIVE (5) FEET BEYOND THE TOE OF SLOPES IN FILL SECTIONS, AND TEN (10) FEET BEYOND EDGE OF PAVEMENT IN SECTIONS WITH NO DITCH OR FILL AREA.

NOTES:
1. STEEL ENCASEMENT PIPE SHALL CONFORM TO ASTM A-139 WITH WALL THICKNESS AND GRADE AS DEFINED IN THE SPECIFICATIONS. MINIMUM ALLOWABLE YIELD STRENGTH IS 35,000 PSI.
2. CARRIER PIPE SHALL BE ADEQUATELY SUPPORTED THE ENTIRE LENGTH WITHIN THE CASING BY USING "SPIDER" STEEL SUPPORTS AT A MAXIMUM OF 9 FOOT CENTERS (ONE AT EACH JOINT AND ONE INTERMEDIATE). OTHER METHODS MUST MEET APPROVAL OF THE ENGINEER.
3. NO EXCAVATED MATERIAL SHALL BE PLACED IN ANY STREAM, DITCH OR DRAINAGE WAY.
4. THE CONTRACTOR IS RESPONSIBLE FOR LOCATING ALL UNDERGROUND UTILITIES PRIOR TO THE START OF CONSTRUCTION.
5. THE CONTRACTOR IS RESPONSIBLE FOR ANY SEDIMENT AND EROSION CONTROL PRACTICES REQUIRED DURING CONSTRUCTION AND THE SUBSEQUENT STABILIZATION OF ALL DISTURBED AREAS AFTER CONSTRUCTION.
6. THE CONTRACTOR IS RESPONSIBLE FOR ALL LAY DOWN AND STOCKPILE AREAS.
7. FOR BORES ON THE NCDOT RIGHT OF WAY, NO WORK WILL BEGIN UNTIL THE CONTRACTOR HAS A COPY OF THE NCDOT ENCROACHMENT PERMIT FOR THE PROJECT.

PSD NO. 7 - BORE DETAIL DETAIL

NOT TO SCALE

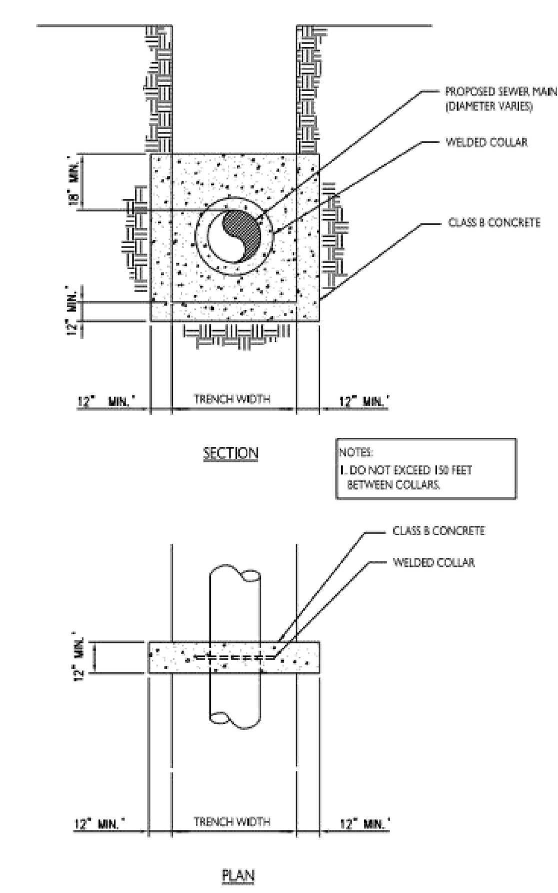

PSD NO. 8 - ANTI SEEP COLLAR DETAIL

NOT TO SCALE

STANDARD DETAILS SHEET A

PLURIS, LLC

REV.NO.	DESCRIPTIONS	DATE
A	BLAKE FARM SF1 - PHASE 1B, 2, and 3 (LOTS 59-255) SUBMITTAL TO PENDER TRC AND PERMITTING AGENCIES	05/13/21016

REVISIONS

SEAL

FINAL PLANS- DO NOT USE FOR CONSTRUCTION

SEAL 022574
05/13/2016

MCKIM&CREED
243 North Front Street
Wilmington, North Carolina 28401
Phone: (910)343-1048, Fax: (910)251-8282
NC LIC. No. F-1222
www.mckimcreed.com

Trask Land CO INC
1202 Eastwood Road
Wilmington, NC 28403
(910) 799-8755

BLAKE FARM
EST 1946

BLAKE FARM SF-1 SUBDIVISION
TOPSAIL TOWNSHIP
PENDER COUNTY NORTH CAROLINA

UTILITY DETAILS

DATE:	13 MAY 2016
MCE PROJ. #	06525-0004
DRAWN	RMC, MAB, CDN
DESIGNED	RMC, MAB, CDN
CHECKED	RMC, RAM, NJL
PROJ. MGR.	RMC

SCALE
HORIZONTAL: N/A
VERTICAL: N/A

M&C FILE NUMBER CU503
DRAWING NUMBER 59

STATUS: FINAL PLANS NOT FOR CONSTRUCTION
REVISION A