BLAKE FARM

A TRASK LAND COMPANY COMMUNITY

SF-1 SUBDIVISION

JANUARY 21, 2015

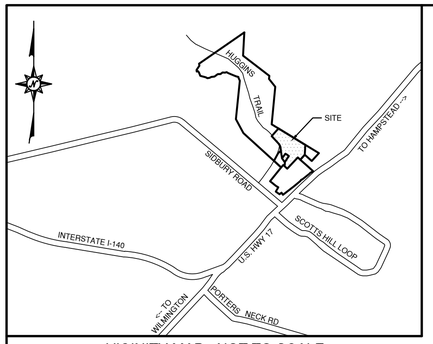

VICINITY MAP - NOT TO SCALE

SHEET INDEX

SHEET NO.	FILE NO.	DESCRIPTION	SCALE
1	G001	COVER	N/A
2	G002	TYPICAL ROADWAY AND PAVEMENT SECTIONS	N/A
3	CS101	OVERALL SITE PLAN	1"=200'
3A	CS101A	OPEN SPACE MAP	1"=200'
3B	CS101B	PHASING MAP	1"=200'
3C	CS101C	IMPACT MAP	1"=200'
4	CS102	ENLARGED SITE PLAN	1"=50'
5	CS103	ENLARGED SITE PLAN	1"=50'
6	CS104	ENLARGED SITE PLAN	1"=50'
7	CS105	ENLARGED SITE PLAN	1"=50'
8	CS106	ENLARGED SITE PLAN	1"=50'
9	CS107	ENLARGED SITE PLAN	1"=50'
10	CS108	PARCEL INFORMATION TABLES	N/A
11	CS109	PARCEL INFORMATION TABLES	N/A
12	CS110	US HWY 17 ROADWAY IMPROVEMENTS	1"=50'
13	CG101	ENLARGED GRADING PLAN	1'=60'
14	CG102	ENLARGED GRADING PLAN	1'=60'
15	CG103	ENLARGED GRADING PLAN	1'=60'
16	CU101	OVERALL UTILITY PLAN	1"=200'
17	CU102	ENLARGED UTILITY PLAN	1"=50'
18	CU103	ENLARGED UTILITY PLAN	1"=50'
19	CU104	ENLARGED UTILITY PLAN	1"=50'
20	CU105	ENLARGED UTILITY PLAN	1"=50'
21	CU106	ENLARGED UTILITY PLAN	1"=50'
22	CU107	ENLARGED UTILITY PLAN	1"=50'
23	CU701	BLAKE FARM BLVD. PLAN AND PROFILE STA 10+00 TO 22+00	1"=40'
24	CU702	BLAKE FARM BLVD. PLAN AND PROFILE STA 22+00 TO 34+00	1"=40'
25	CU703	BLAKE FARM BLVD. PLAN AND PROFILE STA 34+00 TO 46+00	1"=40'
26	CU704	BLAKE FARM BLVD. PLAN AND PROFILE STA 46+00 TO 58+00	1"=40'
27	CU705	BLAKE FARM BLVD. PLAN AND PROFILE STA 58+00 TO 70+00	1"=40'
28	CU706	BLAKE FARM BLVD. PLAN AND PROFILE STA 70+00 TO 74+00	1"=40'
29	CU707	N/S COLLECTOR PLAN AND PROFILE STA 10+00 TO 22+00	1"=40'
30	CU708	N/S COLLECTOR PLAN AND PROFILE STA 22+00 TO 31+25	1"=40'
31	CU709	N/S COLLECTOR PLAN AND PROFILE STA 30+00 TO 35+45.04	1"=40'
32	CU710	RESIDENTIAL COLLECTOR 1 PLAN AND PROFILE STA 10+00 TO 21+00	1"=40'
33	CU711	RESIDENTIAL COLLECTOR 1 & LOCAL 12 PLAN AND PROFILE STA 21+00 TO 33+00	1"=40'
34	CU712	RESIDENTIAL COLLECTOR 1 PLAN AND PROFILE STA 33+00 TO 45+00	1"=40'
35	CU713	RES. COLLECTOR 1 & RES. LOCAL 4 PLAN AND PROFILE	1"=40'
36	CU714	RESIDENTIAL LOCAL 1 PLAN AND PROFILE STA 10+00 TO 15+29.86	1"=40'

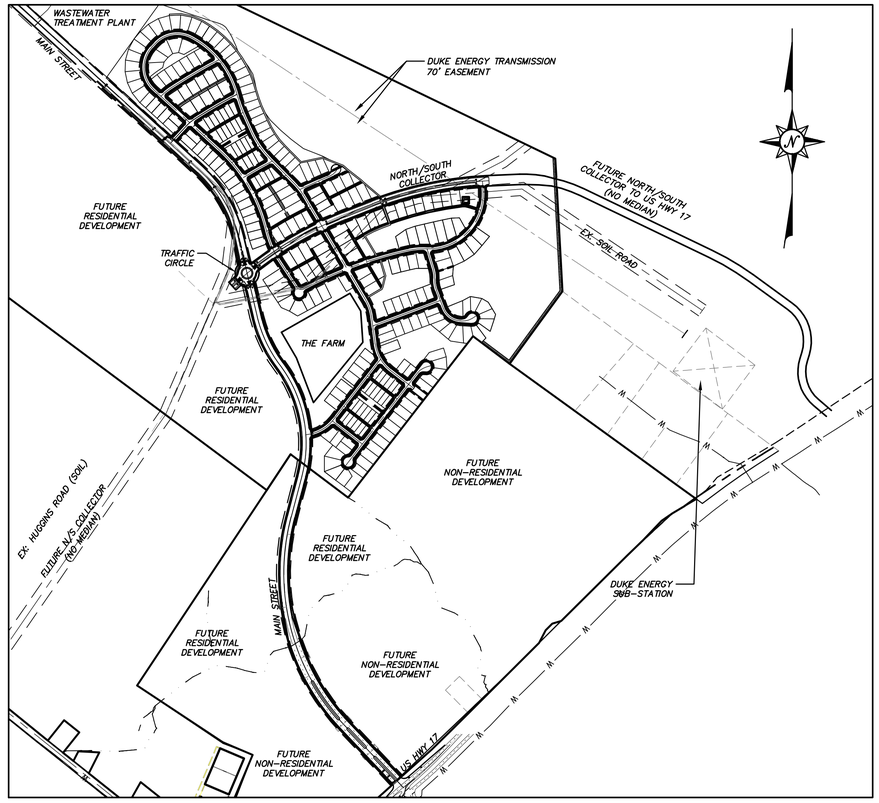

NOT TO SCALE

Trask Land CO INC

1202 Eastwood Road
Wilmington, NC 28403
(910) 799-8755

McKIM&CREED

243 North Front Street
Wilmington, NC 28401
Phone: (910) 343-1048
Fax: (910) 251-8282
NC FIRM LICENSE F-1222
www.mckimcreed.com

811 Know what's below. Call before you dig.

FINAL PLAN NOT FOR CONSTRUCTION

NORTH CAROLINA PROFESSIONAL SEAL 038577 ENGINEER RICHARD A. HAUSER
01-21-15

BLAKE FARM

— EST 1946 —

SHEET INDEX

SHEET NO.	FILE NO.	DESCRIPTION	SCALE
37	CU715	RES. COLL. 3, RES. LOCALS 2 & 3 PLAN AND PROFILE STA 10+00 TO 16+43.91 AND 10+00 TO 12+57.17	1"=40'
38	CU716	ALLEYS 1, 2, & 3 PLAN AND PROFILE	1"=40'
39	CU717	ALLEYS 4, 5, & 6 PLAN AND PROFILE	1"=40'
40	CU718	RESIDENTIAL COLLECTOR 2 PLAN AND PROFILE STA 10+00 TO 18+00	1"=40'
41	CU719	RESIDENTIAL COLLECTOR 2 PLAN AND PROFILE STA 18+00 TO 25+93	1"=40'
42	CU720	RESIDENTIAL LOCAL 10 PLAN AND PROFILE STA 10+00 TO 22+00	1"=40'
43	CU721	RESIDENTIAL LOCAL 10 PLAN AND PROFILE STA 22+00 TO 31+52.39	1"=40'
44	CU722	ALLEYS 7, 8, & 9 PLAN AND PROFILE	1"=40'
45	CU723	ALLEY 10 PLAN AND PROFILE STA 10+00 TO 20+24.31	1"=40'
46	CU724	RESIDENTIAL LOCAL 5 PLAN AND PROFILE STA 10+00 TO 17+93.86	1"=40'
47	CU725	RESIDENTIAL LOCAL 6 & ALLEY 11 PLAN AND PROFILE	1"=40'
48	CU726	RESIDENTIAL LOCAL 11 PLAN AND PROFILE STA 10+00 TO 18+38.13	1"=40'
49	CU727	RESIDENTIAL 7 & 9 PLAN AND PROFILE STA 10+00 TO 20+00.14	1"=40'
50	CU728	RES. LOCAL 8 & ALLEYS 13 & 14 PLAN AND PROFILE	1"–40'
51	CU301	PUMP STATION DETAILS	1"–10'
52	CS501	SITE DETAILS	N/A
53	CU501	UTILITY DETAILS	N/A
54	CU502	UTILITY DETAILS	N/A
55	CN501	CONSTRUCTED WETLAND DETAILS	N/A
56	CN502	WET DETENTION POND #1 DETAILS	N/A
57	CN503	WET DETENTION POND #2 DETAILS	N/A
58	CN504	WET DETENTION POND#3 DETAILS	N/A
59	CP501	PAVEMENT MARKING & TRAFFIC SIGN DETAILS	N/A
60	CP502	PAVEMENT MARKING & TRAFFIC SIGN DETAILS	N/A
61	CT501	ROUNDABOUT DETAILS	N/A
62	CT502	ROUNDABOUT SECTION	N/A
63	CT503	ROADWAY DETAILS	N/A
64	CT504	ROADWAY DETAILS	N/A
65	CT505	ROADWAY DETAILS	N/A
66	CT506	ROADWAY DETAILS	N/A

BLAKE FARM SF-1 SUBDIVISION

MC FILE: 06525-0001

STATUS: FINAL PLAN - NOT FOR CONSTRUCTION

S:\6525\001\98-Drawings\G001_06525001.dwg, 1/27/2015 4:02:52 PM, cruesey

BLAKE FARM BOULEVARD - A

100' R/W (PUBLIC)

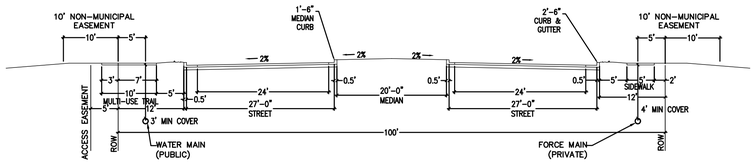

BLAKE FARM BOULEVARD - B

80' R/W (PUBLIC)

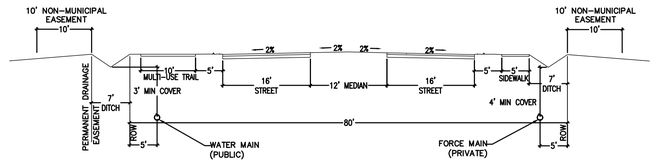

BLAKE FARM BOULEVARD - C

80' R/W (PUBLIC)

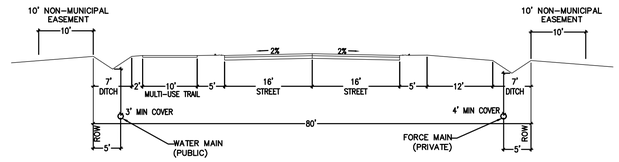

NORTH/SOUTH COLLECTOR

80' R/W (PUBLIC)

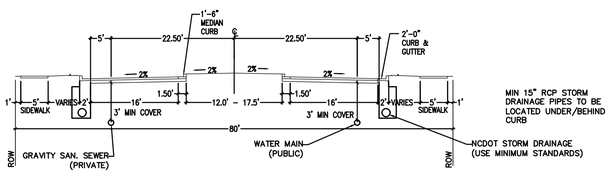

NORTH/SOUTH COLLECTOR (NO MEDIAN)

60' R/W (PUBLIC)

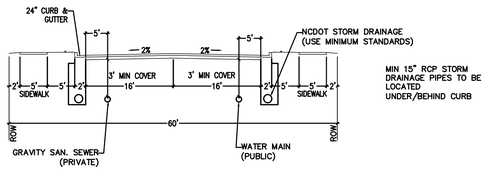

RESIDENTIAL COLLECTOR

50' R/W (PUBLIC)

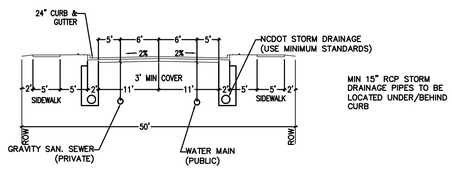

RESIDENTIAL LOCAL

50' R/W (PUBLIC)

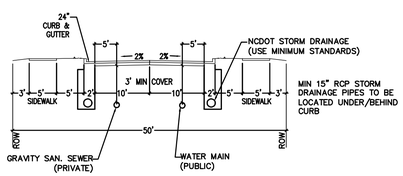

ALLEY

14' EASEMENT (PRIVATE)

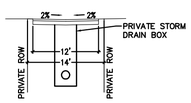

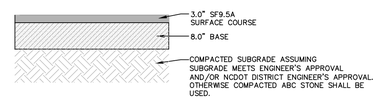

ASPHALT PAVEMENT SECTION
(MAIN STREET)

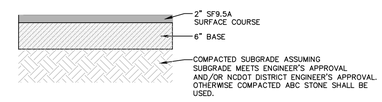

ASPHALT PAVEMENT SECTION
(COLLECTORS AND LOCAL STREETS)

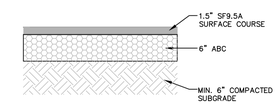

ASPHALT PAVEMENT SECTION
(ALLEY)

NOTE:
1) PAVEMENT SECTIONS ARE BASED UPON A SOILS REPORT PREPARED BY ECS CAROLINAS DATED JULY 24, 2014.
2) NCDOT SUBDIVISION GUIDELINES FOR GROUP II, FAIR TO POOR SOILS ARE LESS CONSERVATIVE. SO THE ECS GUIDELINES WERE USED FOR BLAKE FARM.

REV.NO.	DESCRIPTIONS	DATE
C	ISSUED FOR PERMITTING	01/21/15
B	PRELIMINARY PLAT PENDER CO. REVIEW	10/10/14
A	75% CONSTRUCTION DOCUMENTS TO TLC FOR REVIEW	08/11/14

REVISIONS

SEAL

PRELIMINARY - DO NOT USE FOR CONSTRUCTION

SEAL

NORTH CAROLINA PROFESSIONAL SEAL 038577 ENGINEER RICHARD A. MCKIMMON

01-21-15

McKIM&CREED
243 North Front Street
Wilmington, North Carolina 28401
Phone: (910)343-1048, Fax: (910)251-8282

NC LIC. No. F-1222
www.mckimcreed.com

Trask Land CO INC
1202 Eastwood Road
Wilmington, NC 28403
(910) 799-8755

BLAKE FARM
EST. 1946

BLAKE FARM
TOPSAIL TOWNSHIP
PENDER COUNTY NORTH CAROLINA

TYPICAL ROADWAY AND PAVEMENT SECTIONS

DATE:	9 JANUARY 2015
MCE PROJ. #	6525-0001
DRAWN	CDN
DESIGNED	RAC
CHECKED	RAM
PROJ. MGR.	RAM

SCALE
HORIZONTAL: N/A
VERTICAL: N/A

M&C FILE NUMBER G002
DRAWING NUMBER 2

STATUS: FINAL PLAN NOT FOR CONSTRUCTION
REVISION C

S:\6525\0001\8D-Drawings\G002_06525001.dwg, 1/27/2015 4:03:33 PM, cnursey

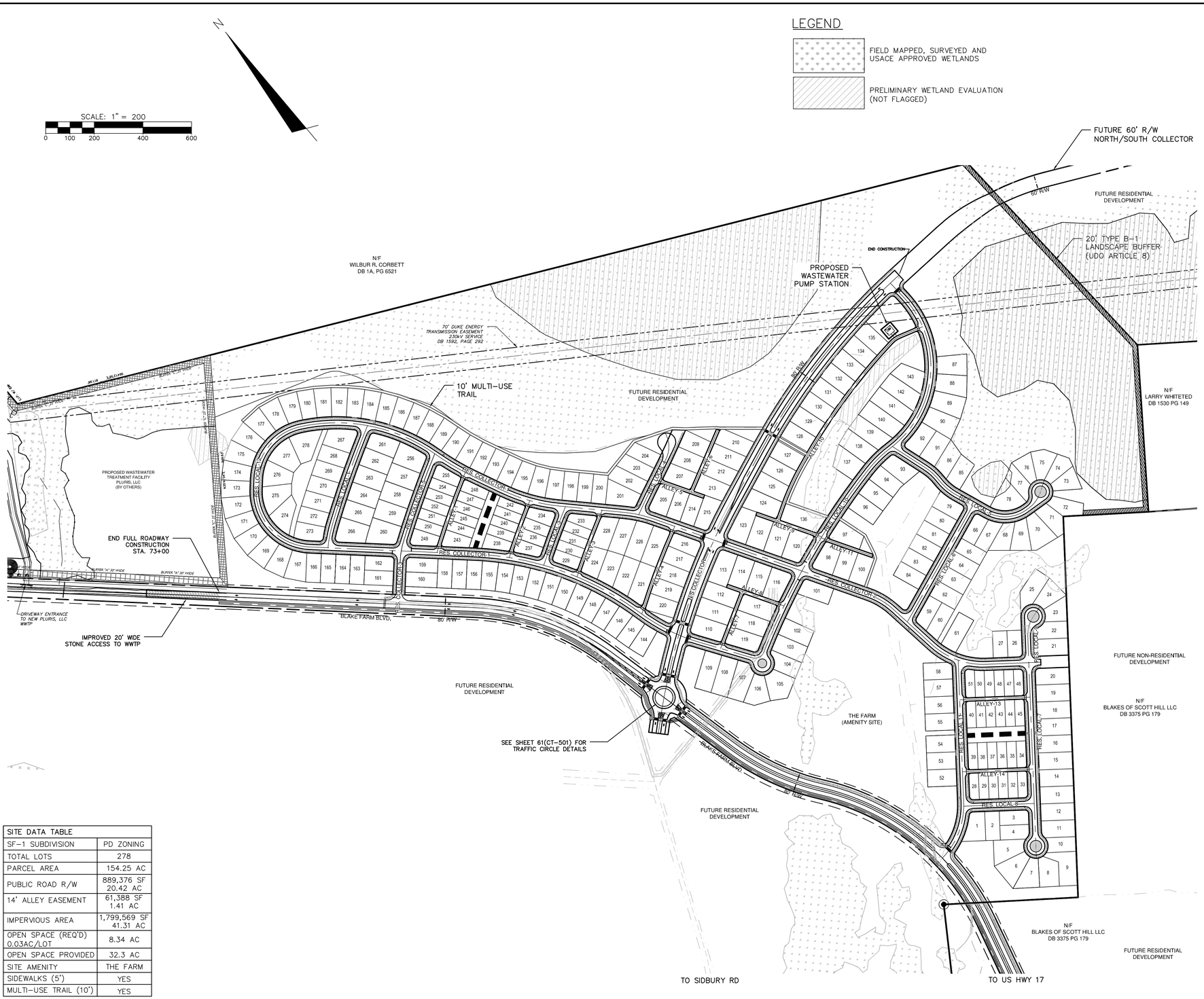

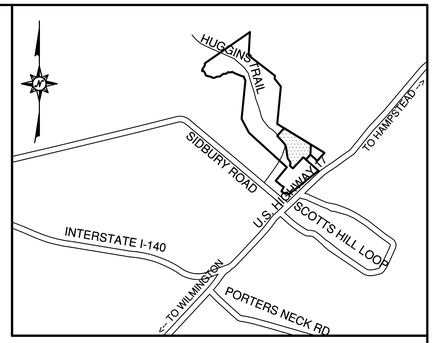

VICINITY MAP - NOT TO SCALE

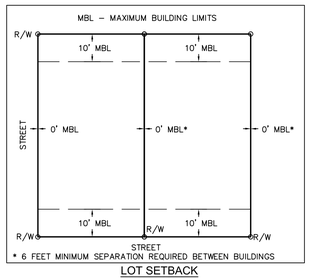

LOT SETBACK
NOT TO SCALE

SITE DATA TABLE	
SF-1 SUBDIVISION	PD ZONING
TOTAL LOTS	278
PARCEL AREA	154.25 AC
PUBLIC ROAD R/W	889,376 SF 20.42 AC
14' ALLEY EASEMENT	61,388 SF 1.41 AC
IMPERVIOUS AREA	1,799,569 SF 41.31 AC
OPEN SPACE (REQ'D) 0.03AC/LOT	8.34 AC
OPEN SPACE PROVIDED	32.3 AC
SITE AMENITY	THE FARM
SIDEWALKS (5')	YES
MULTI-USE TRAIL (10')	YES

SITE NOTES:

1. THE MINIMUM LOT SIZE IN BLAKE FARM PER THE APPROVED MDP SHALL BE NO LESS THAN 3,000 SF.

   CONVENTIONAL LOTS WILL RANGE IN SIZE FROM 5,000 SF TO 1-ACRE.

2. OPEN SPACE REQ'D: 0.03 AC/LOT
   278 LOTS X 0.03 AC./LOT = 8.34 AC.
   OPEN SPACE PROVIDED: 32.3 ACRES

3. THERE IS NO EVIDENCE OF ENDANGERED SPECIES OR HABITAT ISSUES ON THE PROPERTY. THERE ARE NO STATE CULTURAL RESOURCES FOUND ON THE PROPERTY.

4. THE TRACT IS NOT WITHIN SPECIAL FLOOD HAZARD AREA DESIGNATED BY NC FLOODPLAIN MAPPING.

5. PUBLIC STREETS ARE DESIGNED TO MEET NCDOT STANDARDS AND SPECIFICATIONS FOR COMPLETE STREETS AND NCDOT SUBDIVISION MANUAL.

6. PUBLIC SANITARY SEWER TO BE PROVIDED BY PLURIS HAMPSTEAD, LLC.

7. PUBLIC WATER TO BE PROVIDED BY PENDER COUNTY UTILITIES.

8. A BUFFER CONSISTING OF AT LEAST 1 CANOPY TREE, 2 UNDERSTORY TREES AND EITHER A GRASS OR OTHER APPROVED VEGETATIVE GROUND COVER OF AT LEAST 98% COVERAGE (EXCEPT WITHIN 4 FEET OF THE BASE OF ANY TREE OR SHRUB) OR 32 SHRUBS PER 100 LINEAR FEET WILL BE APPLIED ALONG MAIN STREET.

9. SITE IS LOCATED WITHIN FEMA FLOOD ZONE X – MINIMAL FLOOD RISK.

10. SEE SHEET G002 FOR ROADWAY SECTIONS AND PAVEMENT DESIGN.

11. SEE SHEETS CS108 & CS109 FOR PARCEL AREAS AND BOUNDARY BEARINGS & DISTANCES.

TND LOTS IN SF-1 SUBDIVISION:

1. LOTS 28 – 51 ARE TND LOTS WITH MINIMUM LOT SIZE OF 3,000 SF. SEE SITE NOTE # 1 ABOVE.
2. LOTS 229 – 255 ARE TND LOTS WITH MINIMUM LOT SIZE OF 3,000 SF. SEE SITE NOTE # 1 ABOVE.

REV.NO.	DESCRIPTIONS	DATE
C	ISSUED FOR PERMITTING	01-21-15
B	PRELIMINARY PLAT PENDER CO. REVIEW	10-10-14
A	75% CONSTRUCTION DOCUMENTS TO TLC FOR REVIEW	08-11-14

REVISIONS

SEAL
PRELIMINARY - DO NOT USE FOR CONSTRUCTION

SEAL
NORTH CAROLINA PROFESSIONAL SEAL 038577 ENGINEER RICHARD A. MCKEEN
01-21-15

McKIM&CREED
243 North Front Street
Wilmington, North Carolina 28401
Phone: (910)343-1048, Fax: (910)251-8282
NC LIC. No. F-1222
www.mckimcreed.com

Trask Land CO INC
1202 Eastwood Road
Wilmington, NC 28403
(910) 799-8755

BLAKE FARM
TOPSAIL TOWNSHIP
PENDER COUNTY NORTH CAROLINA

OVERALL SITE PLAN

DATE:	9 JANUARY 2015
MCE PROJ. #	6525-0001
DRAWN	CDN
DESIGNED	RAC
CHECKED	RAM
PROJ. MGR.	RAM

SCALE
HORIZONTAL: 1"=200'
VERTICAL: N/A

M&C FILE NUMBER CS101
DRAWING NUMBER 3

STATUS: FINAL PLAN NOT FOR CONSTRUCTION
REVISION C

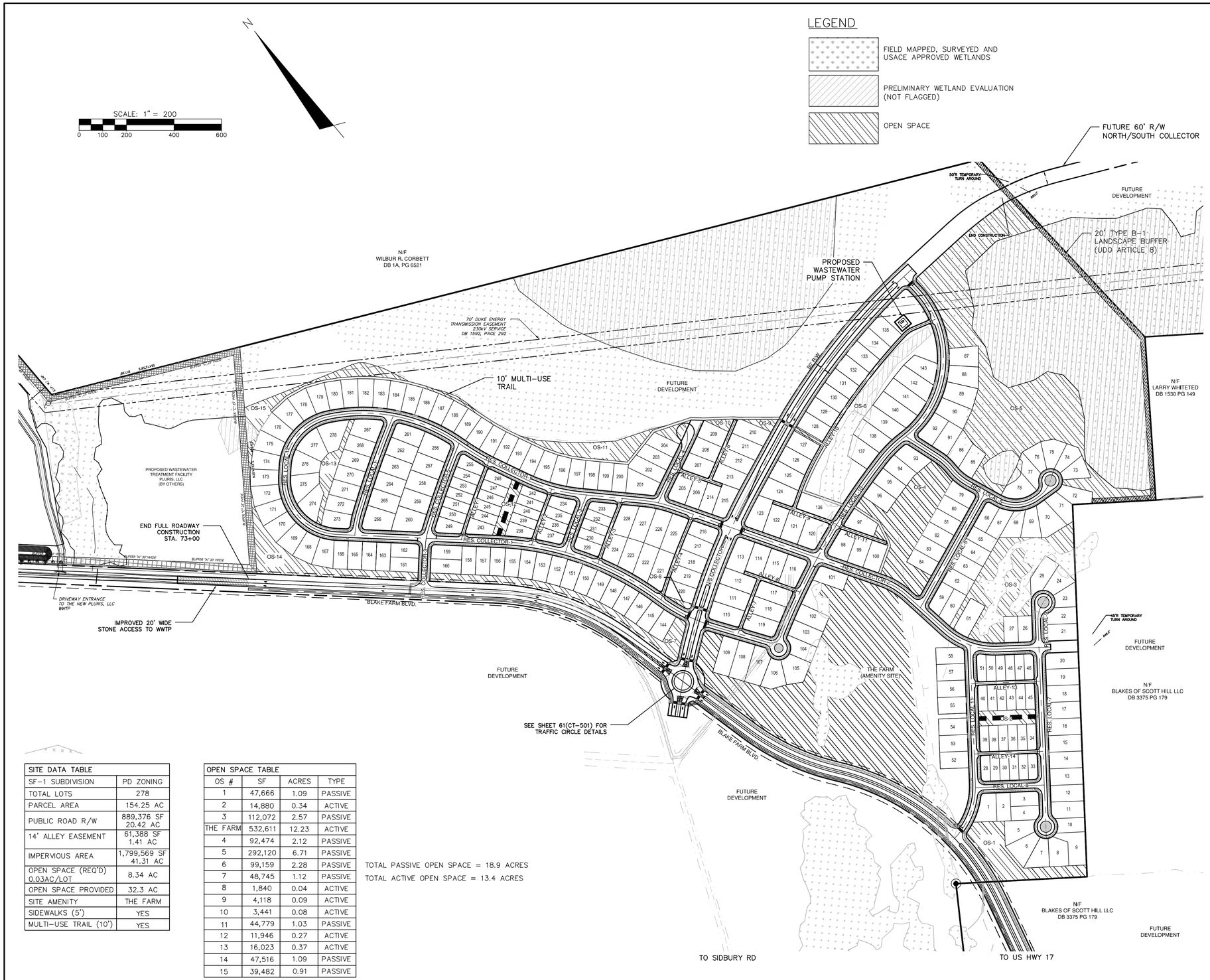

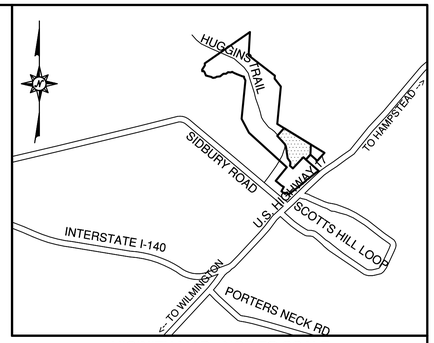

VICINITY MAP - NOT TO SCALE

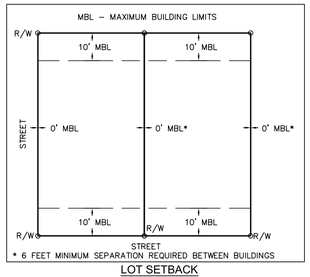

LOT SETBACK
NOT TO SCALE

SITE DATA TABLE	
SF-1 SUBDIVISION	PD ZONING
TOTAL LOTS	278
PARCEL AREA	154.25 AC
PUBLIC ROAD R/W	889,376 SF 20.42 AC
14' ALLEY EASEMENT	61,388 SF 1.41 AC
IMPERVIOUS AREA	1,799,569 SF 41.31 AC
OPEN SPACE (REQ'D) 0.03AC/LOT	8.34 AC
OPEN SPACE PROVIDED	32.3 AC
SITE AMENITY	THE FARM
SIDEWALKS (5')	YES
MULTI-USE TRAIL (10')	YES

OPEN SPACE TABLE			
OS #	SF	ACRES	TYPE
1	47,666	1.09	PASSIVE
2	14,880	0.34	ACTIVE
3	112,072	2.57	PASSIVE
THE FARM	532,611	12.23	ACTIVE
4	92,474	2.12	PASSIVE
5	292,120	6.71	PASSIVE
6	99,159	2.28	PASSIVE
7	48,745	1.12	PASSIVE
8	1,840	0.04	ACTIVE
9	4,118	0.09	ACTIVE
10	3,441	0.08	ACTIVE
11	44,779	1.03	PASSIVE
12	11,946	0.27	ACTIVE
13	16,023	0.37	ACTIVE
14	47,516	1.09	PASSIVE
15	39,482	0.91	PASSIVE

TOTAL PASSIVE OPEN SPACE = 18.9 ACRES
TOTAL ACTIVE OPEN SPACE = 13.4 ACRES

SITE NOTES:

1. THE MINIMUM LOT SIZE IN BLAKE FARM PER THE APPROVED MDP SHALL BE NO LESS THAN 3,000 SF.

   CONVENTIONAL LOTS WILL RANGE IN SIZE FROM 5,000 SF TO 1-ACRE.

2. OPEN SPACE REQ'D: 0.03 AC/LOT
   278 LOTS X 0.03 AC./LOT = 8.34 AC.
   OPEN SPACE PROVIDED: 32.3 ACRES

3. THERE IS NO EVIDENCE OF ENDANGERED SPECIES OR HABITAT ISSUES ON THE PROPERTY. THERE ARE NO STATE CULTURAL RESOURCES FOUND ON THE PROPERTY.

4. THE TRACT IS NOT WITHIN SPECIAL FLOOD HAZARD AREA DESIGNATED BY NC FLOODPLAIN MAPPING.

5. PUBLIC STREETS ARE DESIGNED TO MEET NCDOT STANDARDS AND SPECIFICATIONS FOR COMPLETE STREETS AND NCDOT SUBDIVISION MANUAL.

6. PUBLIC SANITARY SEWER TO BE PROVIDED BY PLURIS HAMPSTEAD, LLC.

7. PUBLIC WATER TO BE PROVIDED BY PENDER COUNTY UTILITIES.

8. A BUFFER CONSISTING OF AT LEAST 1 CANOPY TREE, 2 UNDERSTORY TREES AND EITHER A GRASS OR OTHER APPROVED VEGETATIVE GROUND COVER OF AT LEAST 98% COVERAGE (EXCEPT WITHIN 4 FEET OF THE BASE OF ANY TREE OR SHRUB) OR 32 SHRUBS PER 100 LINEAR FEET WILL BE APPLIED ALONG MAIN STREET.

9. SITE IS LOCATED WITHIN FEMA FLOOD ZONE X – MINIMAL FLOOD RISK.

10. SEE SHEET G002 FOR ROADWAY SECTIONS AND PAVEMENT DESIGN.

11. SEE SHEETS CS108 & CS109 FOR PARCEL AREAS AND BOUNDARY BEARINGS & DISTANCES.

TND LOTS IN SF-1 SUBDIVISION:

1. LOTS 28 – 51 ARE TND LOTS WITH MINIMUM LOT SIZE OF 3,000 SF. SEE SITE NOTE # 1 ABOVE.
2. LOTS 229 – 255 ARE TND LOTS WITH MINIMUM LOT SIZE OF 3,000 SF. SEE SITE NOTE # 1 ABOVE.

REV.NO.	DESCRIPTIONS	DATE
C	ISSUED FOR PERMITTING	01-21-15
B	PRELIMINARY PLAT PENDER CO. REVIEW	10-10-14
A	75% CONSTRUCTION DOCUMENTS TO TLC FOR REVIEW	08-11-14

REVISIONS

SEAL
PRELIMINARY - DO NOT USE FOR CONSTRUCTION

SEAL
NORTH CAROLINA PROFESSIONAL SEAL 038577 ENGINEER RICHARD A. MCKEEN
01-21-15

McKIM&CREED
243 North Front Street
Wilmington, North Carolina 28401
Phone: (910)343-1048, Fax: (910)251-8282
NC LIC. No. F-1222
www.mckimcreed.com

Trask Land CO INC
1202 Eastwood Road
Wilmington, NC 28403
(910) 799-8755

BLAKE FARM – EST. 1546 –

BLAKE FARM
TOPSAIL TOWNSHIP
PENDER COUNTY NORTH CAROLINA

OPEN SPACE MAP

DATE:	9 JANUARY 2015
MCE PROJ. #	6525-0001
DRAWN	CDN
DESIGNED	RAC
CHECKED	RAM
PROJ. MGR.	RAM

SCALE
HORIZONTAL: 1"=200'
VERTICAL: N/A

M&C FILE NUMBER CS101A
DRAWING NUMBER 3A

STATUS: FINAL PLAN NOT FOR CONSTRUCTION
REVISION C

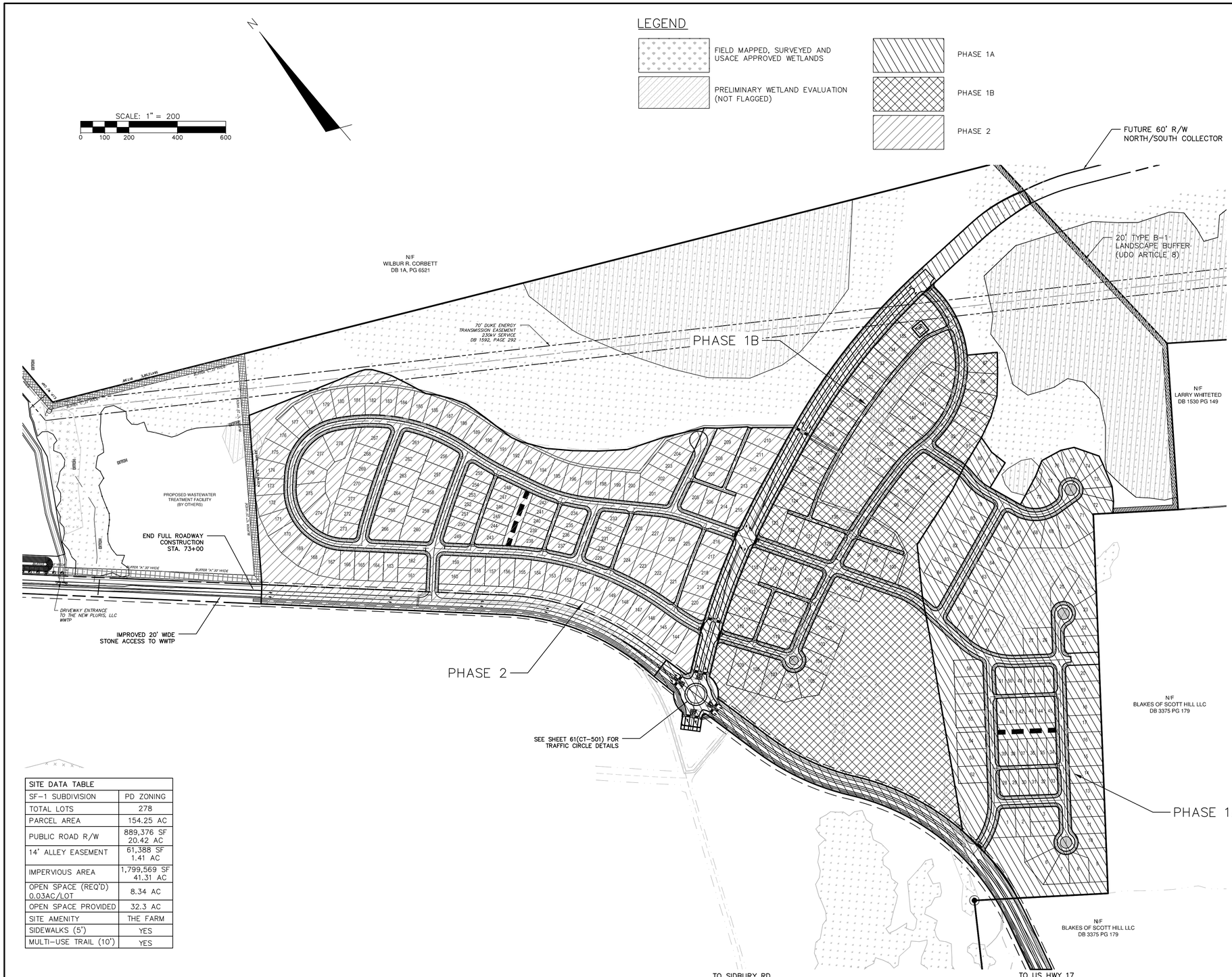

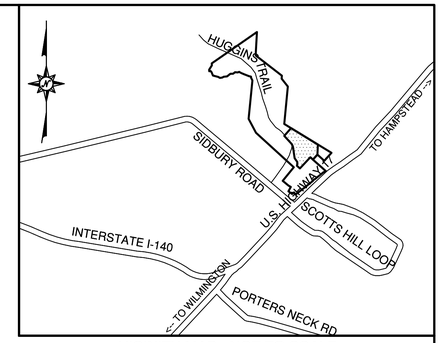

VICINITY MAP - NOT TO SCALE

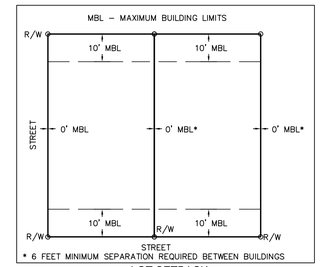

LOT SETBACK
NOT TO SCALE

SITE DATA TABLE	
SF-1 SUBDIVISION	PD ZONING
TOTAL LOTS	278
PARCEL AREA	154.25 AC
PUBLIC ROAD R/W	889,376 SF 20.42 AC
14' ALLEY EASEMENT	61,388 SF 1.41 AC
IMPERVIOUS AREA	1,799,569 SF 41.31 AC
OPEN SPACE (REQ'D) 0.03AC/LOT	8.34 AC
OPEN SPACE PROVIDED	32.3 AC
SITE AMENITY	THE FARM
SIDEWALKS (5')	YES
MULTI-USE TRAIL (10')	YES

SITE NOTES:

1. THE MINIMUM LOT SIZE IN BLAKE FARM PER THE APPROVED MDP SHALL BE NO LESS THAN 3,000 SF.

   CONVENTIONAL LOTS WILL RANGE IN SIZE FROM 5,000 SF TO 1-ACRE.

2. OPEN SPACE REQ'D: 0.03 AC/LOT
   278 LOTS X 0.03 AC./LOT = 8.34 AC.
   OPEN SPACE PROVIDED: 32.3 ACRES

3. THERE IS NO EVIDENCE OF ENDANGERED SPECIES OR HABITAT ISSUES ON THE PROPERTY. THERE ARE NO STATE CULTURAL RESOURCES FOUND ON THE PROPERTY.

4. THE TRACT IS NOT WITHIN SPECIAL FLOOD HAZARD AREA DESIGNATED BY NC FLOODPLAIN MAPPING.

5. PUBLIC STREETS ARE DESIGNED TO MEET NCDOT STANDARDS AND SPECIFICATIONS FOR COMPLETE STREETS AND NCDOT SUBDIVISION MANUAL.

6. PUBLIC SANITARY SEWER TO BE PROVIDED BY PLURIS HAMPSTEAD, LLC.

7. PUBLIC WATER TO BE PROVIDED BY PENDER COUNTY UTILITIES.

8. A BUFFER CONSISTING OF AT LEAST 1 CANOPY TREE, 2 UNDERSTORY TREES AND EITHER A GRASS OR OTHER APPROVED VEGETATIVE GROUND COVER OF AT LEAST 98% COVERAGE (EXCEPT WITHIN 4 FEET OF THE BASE OF ANY TREE OR SHRUB) OR 32 SHRUBS PER 100 LINEAR FEET WILL BE APPLIED ALONG MAIN STREET.

9. SITE IS LOCATED WITHIN FEMA FLOOD ZONE X – MINIMAL FLOOD RISK.

10. SEE SHEET G002 FOR ROADWAY SECTIONS AND PAVEMENT DESIGN.

11. SEE SHEETS CS108 & CS109 FOR PARCEL AREAS AND BOUNDARY BEARINGS & DISTANCES.

TND LOTS IN SF-1 SUBDIVISION:

1. LOTS 28 – 51 ARE TND LOTS WITH MINIMUM LOT SIZE OF 3,000 SF. SEE SITE NOTE # 1 ABOVE.
2. LOTS 229 – 255 ARE TND LOTS WITH MINIMUM LOT SIZE OF 3,000 SF. SEE SITE NOTE # 1 ABOVE.

REV.NO.	DESCRIPTIONS	DATE
C	ISSUED FOR PERMITTING	01/21/15
B	PRELIMINARY PLAT PENDER CO. REVIEW	10/10/14
A	75% CONSTRUCTION DOCUMENTS TO TLC FOR REVIEW	08/11/14

REVISIONS

PRELIMINARY- DO NOT USE FOR CONSTRUCTION

SEAL 038577 ENGINEER RICHARD A. MCKIMMON

McKIM&CREED
243 North Front Street
Wilmington, North Carolina 28401
Phone: (910)343-1048, Fax: (910)251-8282
NC LIC. No. F-1222
www.mckimcreed.com

Trask Land CO INC
1202 Eastwood Road
Wilmington, NC 28403
(910) 799-8755

BLAKE FARM
TOPSAIL TOWNSHIP
PENDER COUNTY NORTH CAROLINA

PHASING MAP

DATE:	9 JANUARY 2015
MCE PROJ. #	6525-0001
DRAWN	CDN
DESIGNED	RAC
CHECKED	RAM
PROJ. MGR.	RAM

SCALE
HORIZONTAL: 1"=200'
VERTICAL: N/A

M&C FILE NUMBER CS101B
DRAWING NUMBER 3B

STATUS: FINAL PLAN NOT FOR CONSTRUCTION
REVISION C

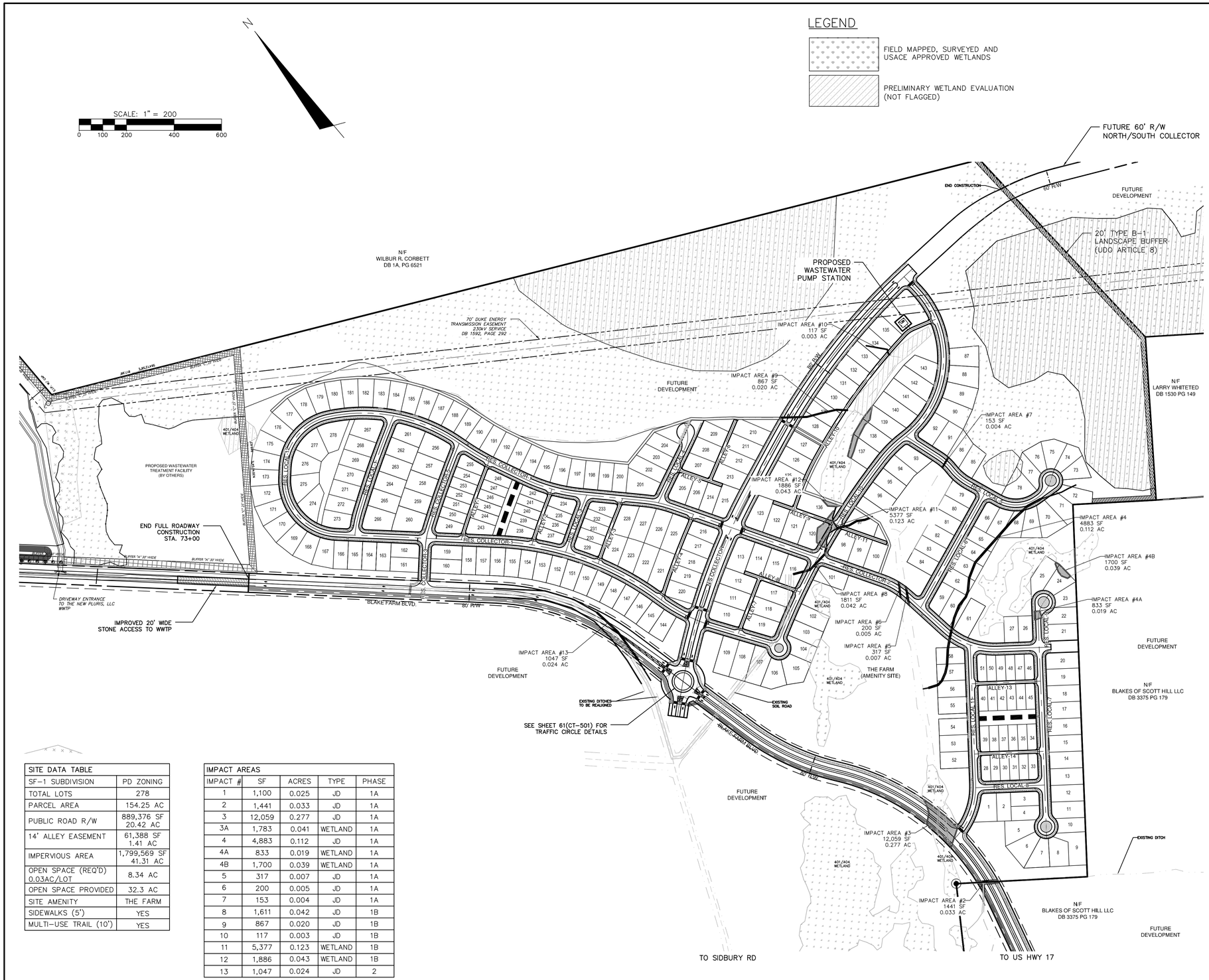

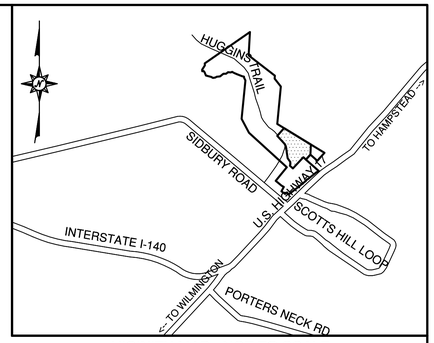

VICINITY MAP - NOT TO SCALE

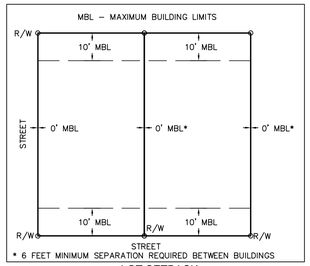

LOT SETBACK
NOT TO SCALE

SITE DATA TABLE	
SF-1 SUBDIVISION	PD ZONING
TOTAL LOTS	278
PARCEL AREA	154.25 AC
PUBLIC ROAD R/W	889,376 SF 20.42 AC
14' ALLEY EASEMENT	61,388 SF 1.41 AC
IMPERVIOUS AREA	1,799,569 SF 41.31 AC
OPEN SPACE (REQ'D) 0.03AC/LOT	8.34 AC
OPEN SPACE PROVIDED	32.3 AC
SITE AMENITY	THE FARM
SIDEWALKS (5')	YES
MULTI-USE TRAIL (10')	YES

IMPACT AREAS				
IMPACT #	SF	ACRES	TYPE	PHASE
1	1,100	0.025	JD	1A
2	1,441	0.033	JD	1A
3	12,059	0.277	JD	1A
3A	1,783	0.041	WETLAND	1A
4	4,883	0.112	JD	1A
4A	833	0.019	WETLAND	1A
4B	1,700	0.039	WETLAND	1A
5	317	0.007	JD	1A
6	200	0.005	JD	1A
7	153	0.004	JD	1A
8	1,611	0.042	JD	1B
9	867	0.020	JD	1B
10	117	0.003	JD	1B
11	5,377	0.123	WETLAND	1B
12	1,886	0.043	WETLAND	1B
13	1,047	0.024	JD	2

*JD=JURSIDICTIONAL DITCH

SITE NOTES:

1. THE MINIMUM LOT SIZE IN BLAKE FARM PER THE APPROVED MDP SHALL BE NO LESS THAN 3,000 SF..

   CONVENTIONAL LOTS WILL RANGE IN SIZE FROM 5,000 SF TO 1-ACRE.

2. OPEN SPACE REQ'D: 0.03 AC/LOT
   278 LOTS X 0.03 AC./LOT = 8.34 AC.
   OPEN SPACE PROVIDED: 32.3 ACRES

3. THERE IS NO EVIDENCE OF ENDANGERED SPECIES OR HABITAT ISSUES ON THE PROPERTY. THERE ARE NO STATE CULTURAL RESOURCES FOUND ON THE PROPERTY.

4. THE TRACT IS NOT WITHIN SPECIAL FLOOD HAZARD AREA DESIGNATED BY NC FLOODPLAIN MAPPING.

5. PUBLIC STREETS ARE DESIGNED TO MEET NCDOT STANDARDS AND SPECIFICATIONS FOR COMPLETE STREETS AND NCDOT SUBDIVISION MANUAL.

6. PUBLIC SANITARY SEWER TO BE PROVIDED BY PLURIS HAMPSTEAD, LLC.

7. PUBLIC WATER TO BE PROVIDED BY PENDER COUNTY UTILITIES.

8. A BUFFER CONSISTING OF AT LEAST 1 CANOPY TREE, 2 UNDERSTORY TREES AND EITHER A GRASS OR OTHER APPROVED VEGETATIVE GROUND COVER OF AT LEAST 98% COVERAGE (EXCEPT WITHIN 4 FEET OF THE BASE OF ANY TREE OR SHRUB) OR 32 SHRUBS PER 100 LINEAR FEET WILL BE APPLIED ALONG MAIN STREET.

9. SITE IS LOCATED WITHIN FEMA FLOOD ZONE X – MINIMAL FLOOD RISK.

10. SEE SHEET G002 FOR ROADWAY SECTIONS AND PAVEMENT DESIGN.

11. SEE SHEETS CS108 & CS109 FOR PARCEL AREAS AND BOUNDARY BEARINGS & DISTANCES.

TND LOTS IN SF-1 SUBDIVISION:

1. LOTS 28 – 51 ARE TND LOTS WITH MINIMUM LOT SIZE OF 3,000 SF. SEE SITE NOTE # 1 ABOVE.
2. LOTS 229 – 255 ARE TND LOTS WITH MINIMUM LOT SIZE OF 3,000 SF. SEE SITE NOTE # 1 ABOVE.

REV.NO.	DESCRIPTIONS	DATE
C	ISSUED FOR PERMITTING	01-21-15
B	PRELIMINARY PLAT PENDER CO. REVIEW	10-10-14
A	75% CONSTRUCTION DOCUMENTS TO TLC FOR REVIEW	08-11-14

REVISIONS

SEAL
PRELIMINARY- DO NOT USE FOR CONSTRUCTION

SEAL
NORTH CAROLINA PROFESSIONAL SEAL 038577 ENGINEER RICHARD A. MCKEEN
01-21-15

McKIM&CREED
243 North Front Street
Wilmington, North Carolina 28401
Phone: (910)343-1048, Fax: (910)251-8282
NC LIC. No. F-1222
www.mckimcreed.com

Trask Land CO INC
1202 Eastwood Road
Wilmington, NC 28403
(910) 799-8755

BLAKE FARM – EST. 1946 –

BLAKE FARM
TOPSAIL TOWNSHIP
PENDER COUNTY NORTH CAROLINA

IMPACT MAP

DATE:	9 JANUARY 2015
MCE PROJ. #	6525-0001
DRAWN	CDN
DESIGNED	RAC
CHECKED	RAM
PROJ. MGR.	RAM

SCALE
HORIZONTAL: 1"=200'
VERTICAL: N/A

M&C FILE NUMBER CS101C
DRAWING NUMBER 3C

STATUS: FINAL PLAN NOT FOR CONSTRUCTION
REVISION C

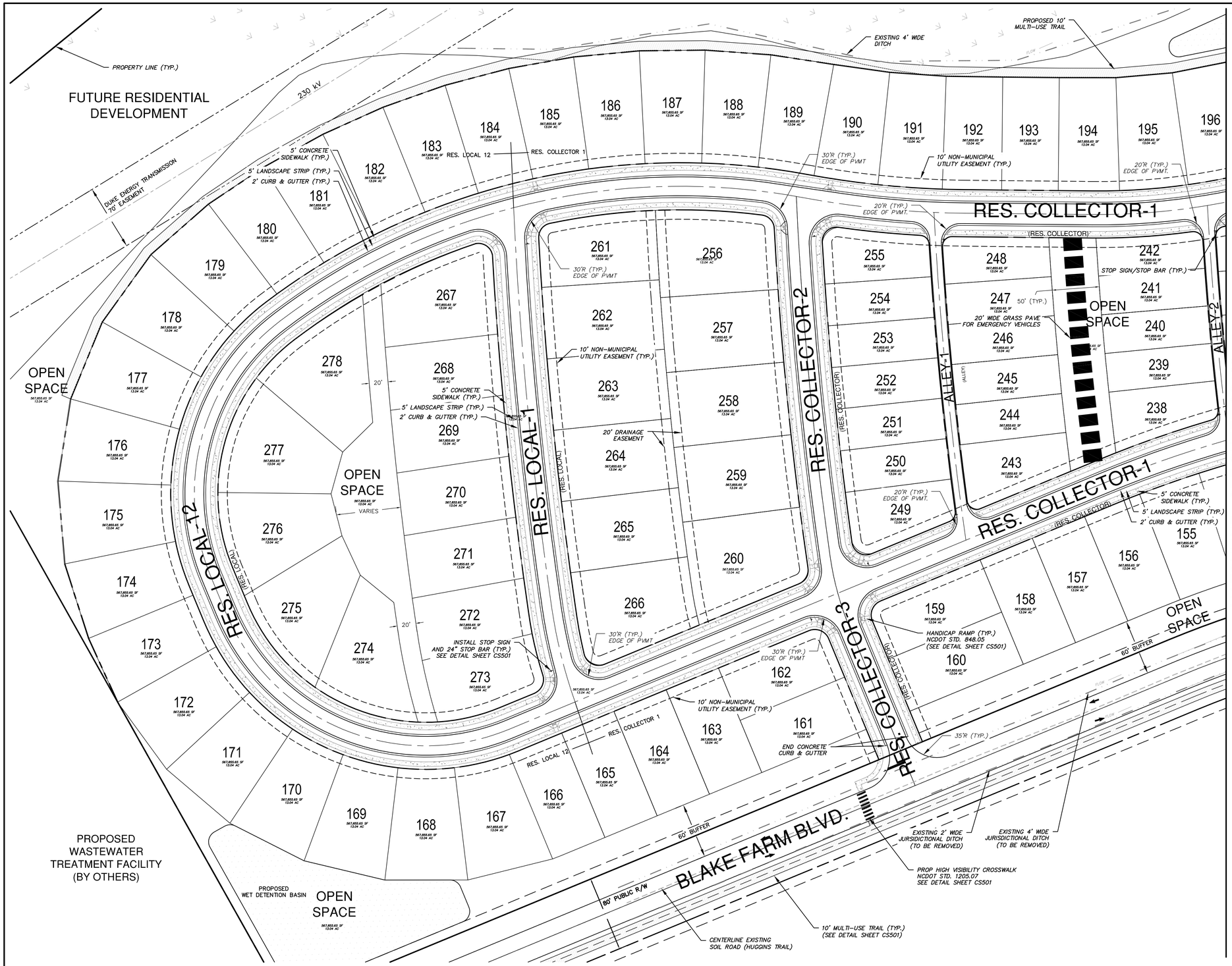

LEGEND

FIELD MAPPED, SURVEYED AND USACE APPROVED WETLANDS

PRELIMINARY WETLAND EVALUATION (NOT FLAGGED)

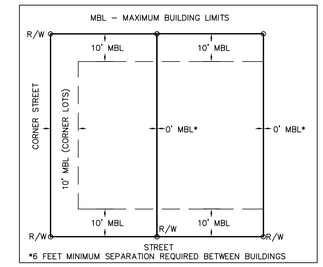

LOT SETBACK (TND LOTS 28-51 & 229-255)
NOT TO SCALE

SITE NOTES:

1. THE MINIMUM LOT SIZE IN BLAKE FARM PER THE APPROVED MDP SHALL BE NO LESS THAN 3,000 SF.

   CONVENTIONAL LOTS WILL RANGE IN SIZE FROM 5,000 SF TO 1–ACRE.

2. OPEN SPACE REQ'D: 0.03 AC/LOT
   278 LOTS X 0.03 AC./LOT = 8.34 AC.
   OPEN SPACE PROVIDED: 32.3 ACRES

3. THERE IS NO EVIDENCE OF ENDANGERED SPECIES OR HABITAT ISSUES ON THE PROPERTY. THERE ARE NO STATE CULTURAL RESOURCES FOUND ON THE PROPERTY.

4. THE TRACT IS NOT WITHIN SPECIAL FLOOD HAZARD AREA DESIGNATED BY NC FLOODPLAIN MAPPING.

5. PUBLIC STREETS ARE DESIGNED TO MEET NCDOT STANDARDS AND SPECIFICATIONS FOR COMPLETE STREETS AND NCDOT SUBDIVISION MANUAL.

6. PUBLIC SANITARY SEWER TO BE PROVIDED BY PLURIS HAMPSTEAD, LLC.

7. PUBLIC WATER TO BE PROVIDED BY PENDER COUNTY UTILITIES.

8. A BUFFER CONSISTING OF AT LEAST 1 CANOPY TREE, 2 UNDERSTORY TREES AND EITHER A GRASS OR OTHER APPROVED VEGETATIVE GROUND COVER OF AT LEAST 98% COVERAGE (EXCEPT WITHIN 4 FEET OF THE BASE OF ANY TREE OR SHRUB) OR 32 SHRUBS PER 100 LINEAR FEET WILL BE APPLIED ALONG MAIN STREET.

9. SITE IS LOCATED WITHIN FEMA FLOOD ZONE X – MINIMAL FLOOD RISK.

10. SEE SHEET G002 FOR ROADWAY SECTIONS AND PAVEMENT DESIGN. SEE SHEET CS–501 FOR SITE DETAILS.

11. SEE SHEETS CS108 & CS109 FOR PARCEL AREAS AND BOUNDARY BEARINGS & DISTANCES.

TND LOTS IN SF-1 SUBDIVISION:

1. LOTS 28 – 51 ARE TND LOTS WITH MINIMUM LOT SIZE OF 3,000 SF. SEE SITE NOTE # 1 ABOVE.
2. LOTS 229 – 255 ARE TND LOTS WITH MINIMUM LOT SIZE OF 3,000 SF. SEE SITE NOTE # 1 ABOVE.

N

SCALE: 1" = 50
0 25 50 100 150

REV.NO.	DESCRIPTIONS	DATE
C	ISSUED FOR PERMITTING	01/21/15
B	PRELIMINARY PLAT PENDER CO. REVIEW	10/10/14
A	75% CONSTRUCTION DOCUMENTS TO TLC FOR REVIEW	08/11/14

REVISIONS

SEAL
PRELIMINARY - DO NOT USE FOR CONSTRUCTION

SEAL
NORTH CAROLINA PROFESSIONAL SEAL 038577 ENGINEER RICHARD A. MCGEEN
01-21-15

McKIM&CREED
243 North Front Street
Wilmington, North Carolina 28401
Phone: (910)343-1048, Fax: (910)251-8282
NC LIC. No. F-1222
www.mckimcreed.com

Trask Land CO INC
1202 Eastwood Road
Wilmington, NC 28403
(910) 799-8755

BLAKE FARM
EST. 1946

BLAKE FARM
TOPSAIL TOWNSHIP
PENDER COUNTY NORTH CAROLINA

ENLARGED SITE PLAN

DATE:	9 JANUARY 2015
MCE PROJ. #	6525-0001
DRAWN	CDN
DESIGNED	RAC
CHECKED	RAM
PROJ. MGR.	RAM

SCALE
HORIZONTAL:
VERTICAL:

M&C FILE NUMBER
CS102
DRAWING NUMBER
4

STATUS: FINAL PLAN NOT FOR CONSTRUCTION
REVISION C

LEGEND

- FIELD MAPPED, SURVEYED AND USACE APPROVED WETLANDS
- PRELIMINARY WETLAND EVALUATION (NOT FLAGGED)
- STAMPED CONCRETE FLUSH WITH ASPHALT
- WETLAND AND JURSIDICTIONAL DITCH IMPACTS

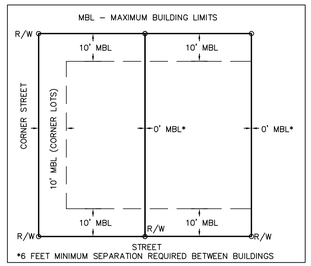

LOT SETBACK (TND LOTS 28-51 & 229-255)
NOT TO SCALE

SITE NOTES:

1. THE MINIMUM LOT SIZE IN BLAKE FARM PER THE APPROVED MDP SHALL BE NO LESS THAN 3,000 SF.

   CONVENTIONAL LOTS WILL RANGE IN SIZE FROM 5,000 SF TO 1–ACRE.

2. OPEN SPACE REQ'D: 0.03 AC/LOT
   278 LOTS X 0.03 AC./LOT = 8.34 AC.
   OPEN SPACE PROVIDED: 32.3 ACRES

3. THERE IS NO EVIDENCE OF ENDANGERED SPECIES OR HABITAT ISSUES ON THE PROPERTY. THERE ARE NO STATE CULTURAL RESOURCES FOUND ON THE PROPERTY.

4. THE TRACT IS NOT WITHIN SPECIAL FLOOD HAZARD AREA DESIGNATED BY NC FLOODPLAIN MAPPING.

5. PUBLIC STREETS ARE DESIGNED TO MEET NCDOT STANDARDS AND SPECIFICATIONS FOR COMPLETE STREETS AND NCDOT SUBDIVISION MANUAL.

6. PUBLIC SANITARY SEWER TO BE PROVIDED BY PLURIS HAMPSTEAD, LLC.

7. PUBLIC WATER TO BE PROVIDED BY PENDER COUNTY UTILITIES.

8. A BUFFER CONSISTING OF AT LEAST 1 CANOPY TREE, 2 UNDERSTORY TREES AND EITHER A GRASS OR OTHER APPROVED VEGETATIVE GROUND COVER OF AT LEAST 98% COVERAGE (EXCEPT WITHIN 4 FEET OF THE BASE OF ANY TREE OR SHRUB) OR 32 SHRUBS PER 100 LINEAR FEET WILL BE APPLIED ALONG MAIN STREET.

9. SITE IS LOCATED WITHIN FEMA FLOOD ZONE X – MINIMAL FLOOD RISK.

10. SEE SHEET G002 FOR ROADWAY SECTIONS AND PAVEMENT DESIGN. SEE SHEET CS–501 FOR SITE DETAILS.

11. SEE SHEETS CS108 & CS109 FOR PARCEL AREAS AND BOUNDARY BEARINGS & DISTANCES.

TND LOTS IN SF-1 SUBDIVISION:

1. LOTS 28 – 51 ARE TND LOTS WITH MINIMUM LOT SIZE OF 3,000 SF. SEE SITE NOTE # 1 ABOVE.
2. LOTS 229 – 255 ARE TND LOTS WITH MINIMUM LOT SIZE OF 3,000 SF. SEE SITE NOTE # 1 ABOVE.

N

SCALE: 1" = 50
0 25 50 100 150

REV.NO.	DESCRIPTIONS	DATE
C	ISSUED FOR PERMITTING	01/21/15
B	PRELIMINARY PLAT PENDER CO. REVIEW	10/10/14
A	75% CONSTRUCTION DOCUMENTS TO TLC FOR REVIEW	08/11/14

REVISIONS

PRELIMINARY- DO NOT USE FOR CONSTRUCTION

SEAL 038577 ENGINEER RICHARD A. MCCLAMMY JENSEN

McKIM&CREED
243 North Front Street
Wilmington, North Carolina 28401
Phone: (910)343-1048, Fax: (910)251-8282
NC LIC. No. F-1222
www.mckimcreed.com

Trask Land CO INC
1202 Eastwood Road
Wilmington, NC 28403
(910) 799-8755

BLAKE FARM – EST. 1949

BLAKE FARM
TOPSAIL TOWNSHIP
PENDER COUNTY NORTH CAROLINA

ENLARGED SITE PLAN

DATE:	9 JANUARY 2015
MCE PROJ. #	6525-0001
DRAWN	CDN
DESIGNED	RAC
CHECKED	RAM
PROJ. MGR.	RAM

SCALE
HORIZONTAL:
VERTICAL:

M&C FILE NUMBER: CS103
DRAWING NUMBER: 5

STATUS: FINAL PLAN NOT FOR CONSTRUCTION
REVISION: C

MATCHLINE - SEE SHEETS CS105 & CS106

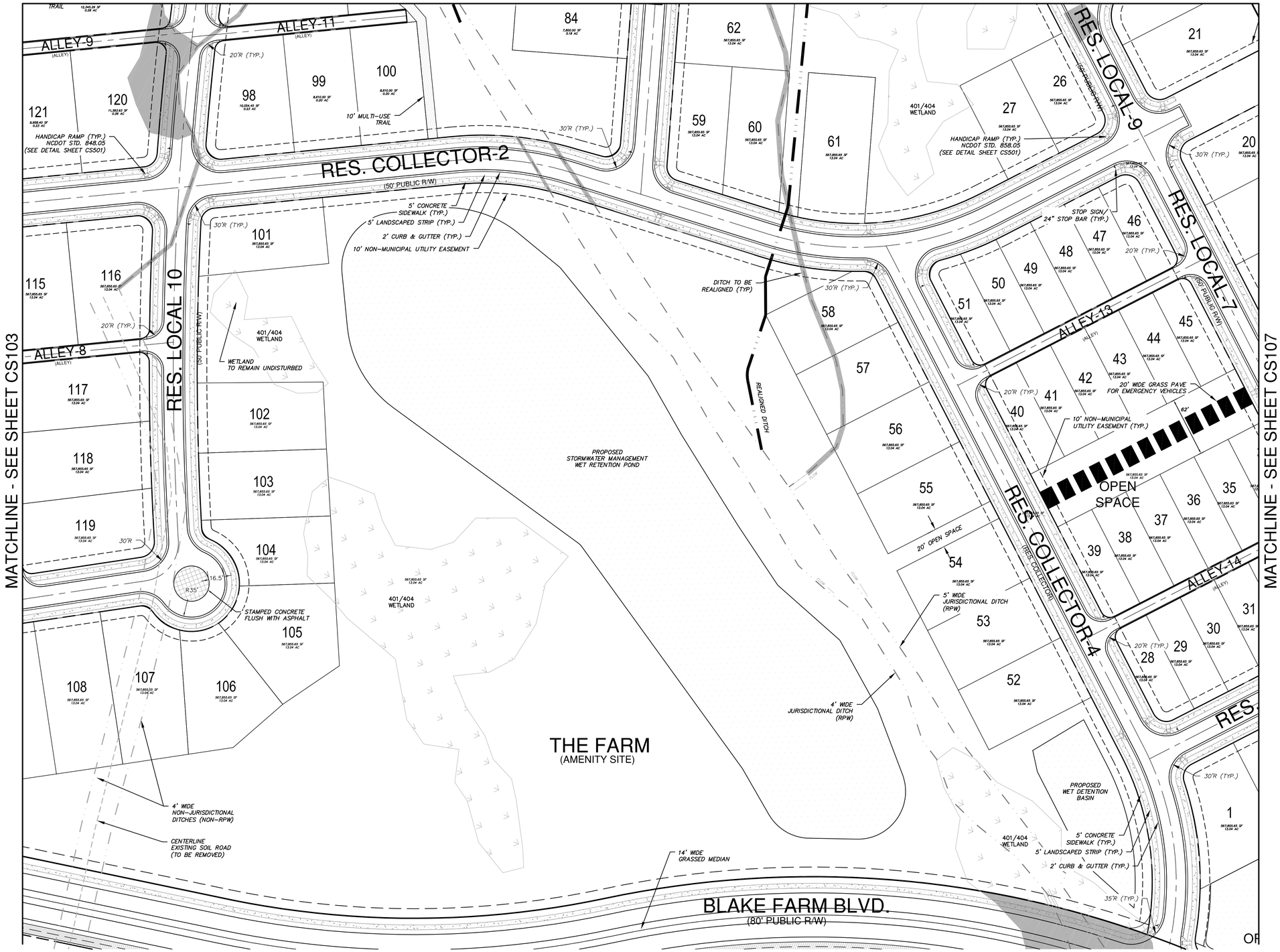

LEGEND

- FIELD MAPPED, SURVEYED AND USACE APPROVED WETLANDS
- PRELIMINARY WETLAND EVALUATION (NOT FLAGGED)
- STAMPED CONCRETE FLUSH WITH ASPHALT
- WETLAND AND JURSIDICTIONAL DITCH IMPACTS

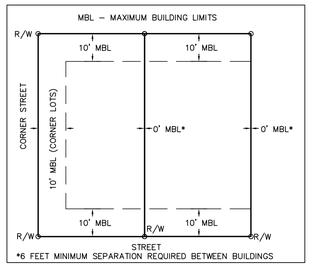

LOT SETBACK (TND LOTS 28-51 & 229-255)
NOT TO SCALE

SITE NOTES:

1. THE MINIMUM LOT SIZE IN BLAKE FARM PER THE APPROVED MDP SHALL BE NO LESS THAN 3,000 SF.

   CONVENTIONAL LOTS WILL RANGE IN SIZE FROM 5,000 SF TO 1–ACRE.

2. OPEN SPACE REQ'D: 0.03 AC/LOT
   278 LOTS X 0.03 AC./LOT = 8.34 AC.
   OPEN SPACE PROVIDED: 32.3 ACRES

3. THERE IS NO EVIDENCE OF ENDANGERED SPECIES OR HABITAT ISSUES ON THE PROPERTY. THERE ARE NO STATE CULTURAL RESOURCES FOUND ON THE PROPERTY.

4. THE TRACT IS NOT WITHIN SPECIAL FLOOD HAZARD AREA DESIGNATED BY NC FLOODPLAIN MAPPING.

5. PUBLIC STREETS ARE DESIGNED TO MEET NCDOT STANDARDS AND SPECIFICATIONS FOR COMPLETE STREETS AND NCDOT SUBDIVISION MANUAL.

6. PUBLIC SANITARY SEWER TO BE PROVIDED BY PLURIS HAMPSTEAD, LLC.

7. PUBLIC WATER TO BE PROVIDED BY PENDER COUNTY UTILITIES.

8. A BUFFER CONSISTING OF AT LEAST 1 CANOPY TREE, 2 UNDERSTORY TREES AND EITHER A GRASS OR OTHER APPROVED VEGETATIVE GROUND COVER OF AT LEAST 98% COVERAGE (EXCEPT WITHIN 4 FEET OF THE BASE OF ANY TREE OR SHRUB) OR 32 SHRUBS PER 100 LINEAR FEET WILL BE APPLIED ALONG MAIN STREET.

9. SITE IS LOCATED WITHIN FEMA FLOOD ZONE X – MINIMAL FLOOD RISK.

10. SEE SHEET G002 FOR ROADWAY SECTIONS AND PAVEMENT DESIGN. SEE SHEET CS–501 FOR SITE DETAILS.

11. SEE SHEETS CS108 & CS109 FOR PARCEL AREAS AND BOUNDARY BEARINGS & DISTANCES.

TND LOTS IN SF-1 SUBDIVISION:

1. LOTS 28 – 51 ARE TND LOTS WITH MINIMUM LOT SIZE OF 3,000 SF. SEE SITE NOTE # 1 ABOVE.
2. LOTS 229 – 255 ARE TND LOTS WITH MINIMUM LOT SIZE OF 3,000 SF. SEE SITE NOTE # 1 ABOVE.

SCALE: 1" = 50
0 25 50 100 150

REV.NO.	DESCRIPTIONS	DATE
C	ISSUED FOR PERMITTING	01-21-15
B	PRELIMINARY PLAT PENDER CO. REVIEW	10-10-14
A	75% CONSTRUCTION DOCUMENTS TO TLC FOR REVIEW	08-11-14

REVISIONS

PRELIMINARY- DO NOT USE FOR CONSTRUCTION

SEAL 038577 NORTH CAROLINA PROFESSIONAL ENGINEER RICHARD A. MEEN
01-21-15

McKIM&CREED
243 North Front Street
Wilmington, North Carolina 28401
Phone: (910)343-1048, Fax: (910)251-8282
NC LIC. No. F-1222
www.mckimcreed.com

Trask Land CO INC
1202 Eastwood Road
Wilmington, NC 28403
(910) 799-8755

BLAKE FARM – EST 1946 –

BLAKE FARM
TOPSAIL TOWNSHIP
PENDER COUNTY NORTH CAROLINA

ENLARGED SITE PLAN

DATE:	9 JANUARY 2015
MCE PROJ. #	6525-0001
DRAWN	CDN
DESIGNED	RAC
CHECKED	RAM
PROJ. MGR.	RAM

SCALE
HORIZONTAL:
VERTICAL:

M&C FILE NUMBER CS104
DRAWING NUMBER 6

STATUS: FINAL PLAN NOT FOR CONSTRUCTION
REVISION C

LEGEND

- FIELD MAPPED, SURVEYED AND USACE APPROVED WETLANDS
- PRELIMINARY WETLAND EVALUATION (NOT FLAGGED)
- STAMPED CONCRETE FLUSH WITH ASPHALT
- WETLAND AND JURSIDICTIONAL DITCH IMPACTS

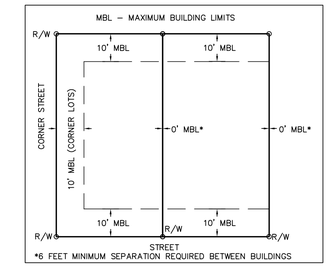

LOT SETBACK (TND LOTS 28-51 & 229-255)
NOT TO SCALE

SITE NOTES:

1. THE MINIMUM LOT SIZE IN BLAKE FARM PER THE APPROVED MDP SHALL BE NO LESS THAN 3,000 SF.

   CONVENTIONAL LOTS WILL RANGE IN SIZE FROM 5,000 SF TO 1–ACRE.

2. OPEN SPACE REQ'D: 0.03 AC/LOT
   278 LOTS X 0.03 AC./LOT = 8.34 AC.
   OPEN SPACE PROVIDED: 32.3 ACRES

3. THERE IS NO EVIDENCE OF ENDANGERED SPECIES OR HABITAT ISSUES ON THE PROPERTY. THERE ARE NO STATE CULTURAL RESOURCES FOUND ON THE PROPERTY.

4. THE TRACT IS NOT WITHIN SPECIAL FLOOD HAZARD AREA DESIGNATED BY NC FLOODPLAIN MAPPING.

5. PUBLIC STREETS ARE DESIGNED TO MEET NCDOT STANDARDS AND SPECIFICATIONS FOR COMPLETE STREETS AND NCDOT SUBDIVISION MANUAL.

6. PUBLIC SANITARY SEWER TO BE PROVIDED BY PLURIS HAMPSTEAD, LLC.

7. PUBLIC WATER TO BE PROVIDED BY PENDER COUNTY UTILITIES.

8. A BUFFER CONSISTING OF AT LEAST 1 CANOPY TREE, 2 UNDERSTORY TREES AND EITHER A GRASS OR OTHER APPROVED VEGETATIVE GROUND COVER OF AT LEAST 98% COVERAGE (EXCEPT WITHIN 4 FEET OF THE BASE OF ANY TREE OR SHRUB) OR 32 SHRUBS PER 100 LINEAR FEET WILL BE APPLIED ALONG MAIN STREET.

9. SITE IS LOCATED WITHIN FEMA FLOOD ZONE X – MINIMAL FLOOD RISK.

10. SEE SHEET G002 FOR ROADWAY SECTIONS AND PAVEMENT DESIGN. SEE SHEET CS–501 FOR SITE DETAILS.

11. SEE SHEETS CS108 & CS109 FOR PARCEL AREAS AND BOUNDARY BEARINGS & DISTANCES.

TND LOTS IN SF-1 SUBDIVISION:

1. LOTS 28 – 51 ARE TND LOTS WITH MINIMUM LOT SIZE OF 3,000 SF. SEE SITE NOTE # 1 ABOVE.
2. LOTS 229 – 255 ARE TND LOTS WITH MINIMUM LOT SIZE OF 3,000 SF. SEE SITE NOTE # 1 ABOVE.

SCALE: 1" = 50
0 25 50 100 150

REV.NO.	DESCRIPTIONS	DATE
C	ISSUED FOR PERMITTING	01/21/15
B	PRELIMINARY PLAT PENDER CO. REVIEW	10/10/14
A	75% CONSTRUCTION DOCUMENTS TO TLC FOR REVIEW	08/11/14

REVISIONS

PRELIMINARY- DO NOT USE FOR CONSTRUCTION

SEAL 038577 ENGINEER RICHARD A. MCCLAMROCH III

McKIM&CREED
243 North Front Street
Wilmington, North Carolina 28401
Phone: (910)343-1048, Fax: (910)251-8282
NC LIC. No. F-1222
www.mckimcreed.com

Trask Land CO INC
1202 Eastwood Road
Wilmington, NC 28403
(910) 799-8755

BLAKE FARM – EST. 1946 –

BLAKE FARM
TOPSAIL TOWNSHIP
PENDER COUNTY NORTH CAROLINA

ENLARGED SITE PLAN

DATE:	9 JANUARY 2015
MCE PROJ. #	6525-0001
DRAWN	CDN
DESIGNED	RAC
CHECKED	RAM
PROJ. MGR.	RAM

SCALE
HORIZONTAL:
VERTICAL:

M&C FILE NUMBER CS105
DRAWING NUMBER 7

STATUS: FINAL PLAN NOT FOR CONSTRUCTION
REVISION C

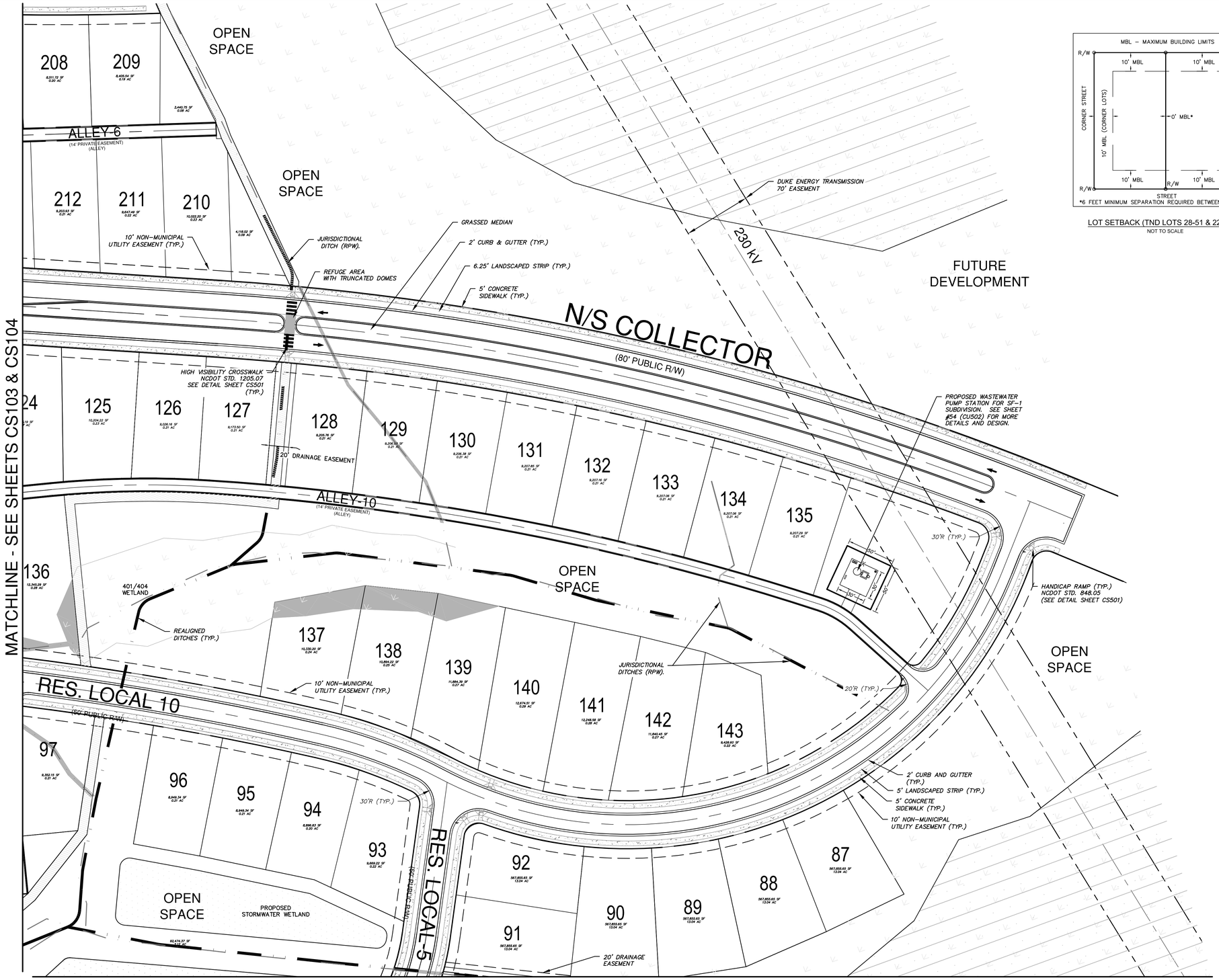

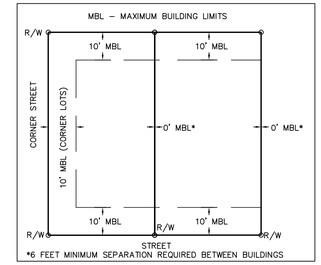

LOT SETBACK (TND LOTS 28-51 & 229-255)
NOT TO SCALE

SITE NOTES:

1. THE MINIMUM LOT SIZE IN BLAKE FARM PER THE APPROVED MDP SHALL BE NO LESS THAN 3,000 SF.

   CONVENTIONAL LOTS WILL RANGE IN SIZE FROM 5,000 SF TO 1–ACRE.

2. OPEN SPACE REQ'D: 0.03 AC./LOT
   278 LOTS X 0.03 AC./LOT = 8.34 AC.
   OPEN SPACE PROVIDED: 32.3 ACRES

3. THERE IS NO EVIDENCE OF ENDANGERED SPECIES OR HABITAT ISSUES ON THE PROPERTY. THERE ARE NO STATE CULTURAL RESOURCES FOUND ON THE PROPERTY.

4. THE TRACT IS NOT WITHIN SPECIAL FLOOD HAZARD AREA DESIGNATED BY NC FLOODPLAIN MAPPING.

5. PUBLIC STREETS ARE DESIGNED TO MEET NCDOT STANDARDS AND SPECIFICATIONS FOR COMPLETE STREETS AND NCDOT SUBDIVISION MANUAL.

6. PUBLIC SANITARY SEWER TO BE PROVIDED BY PLURIS HAMPSTEAD, LLC.

7. PUBLIC WATER TO BE PROVIDED BY PENDER COUNTY UTILITIES.

8. A BUFFER CONSISTING OF AT LEAST 1 CANOPY TREE, 2 UNDERSTORY TREES AND EITHER A GRASS OR OTHER APPROVED VEGETATIVE GROUND COVER OF AT LEAST 98% COVERAGE (EXCEPT WITHIN 4 FEET OF THE BASE OF ANY TREE OR SHRUB) OR 32 SHRUBS PER 100 LINEAR FEET WILL BE APPLIED ALONG MAIN STREET.

9. SITE IS LOCATED WITHIN FEMA FLOOD ZONE X – MINIMAL FLOOD RISK.

10. SEE SHEET G002 FOR ROADWAY SECTIONS AND PAVEMENT DESIGN. SEE SHEET CS–501 FOR SITE DETAILS.

11. SEE SHEETS CS108 & CS109 FOR PARCEL AREAS AND BOUNDARY BEARINGS & DISTANCES.

TND LOTS IN SF-1 SUBDIVISION:

1. LOTS 28 – 51 ARE TND LOTS WITH MINIMUM LOT SIZE OF 3,000 SF. SEE SITE NOTE # 1 ABOVE.
2. LOTS 229 – 255 ARE TND LOTS WITH MINIMUM LOT SIZE OF 3,000 SF. SEE SITE NOTE # 1 ABOVE.

LEGEND

- FIELD MAPPED, SURVEYED AND USACE APPROVED WETLANDS
- PRELIMINARY WETLAND EVALUATION (NOT FLAGGED)
- STAMPED CONCRETE FLUSH WITH ASPHALT
- WETLAND AND JURSIDICTIONAL DITCH IMPACTS

SCALE: 1" = 50
0 25 50 100 150

N

REV.NO.	DESCRIPTIONS	DATE
C	ISSUED FOR PERMITTING	01-21-15
B	PRELIMINARY PLAT PENDER CO. REVIEW	10-10-14
A	75% CONSTRUCTION DOCUMENTS TO TLC FOR REVIEW	08-11-14

REVISIONS

PRELIMINARY- DO NOT USE FOR CONSTRUCTION

SEAL

NORTH CAROLINA PROFESSIONAL SEAL 038577 ENGINEER RICHARD A. MCKIMMON

01-21-15

McKIM&CREED
243 North Front Street
Wilmington, North Carolina 28401
Phone: (910)343-1048, Fax: (910)251-8282

NC LIC. No. F-1222
www.mckimcreed.com

Trask Land CO INC
1202 Eastwood Road
Wilmington, NC 28403
(910) 799-8755

BLAKE FARM – EST 1946 –

BLAKE FARM
TOPSAIL TOWNSHIP
PENDER COUNTY NORTH CAROLINA

ENLARGED SITE PLAN

DATE:	9 JANUARY 2015
MCE PROJ. #	6525-0001
DRAWN	CDN
DESIGNED	RAC
CHECKED	RAM
PROJ. MGR.	RAM

SCALE
HORIZONTAL: 1"=50'
VERTICAL: N/A

M&C FILE NUMBER: CS106
DRAWING NUMBER: 8

STATUS: FINAL PLAN NOT FOR CONSTRUCTION
REVISION: C

MATCHLINE - SEE SHEET CS105

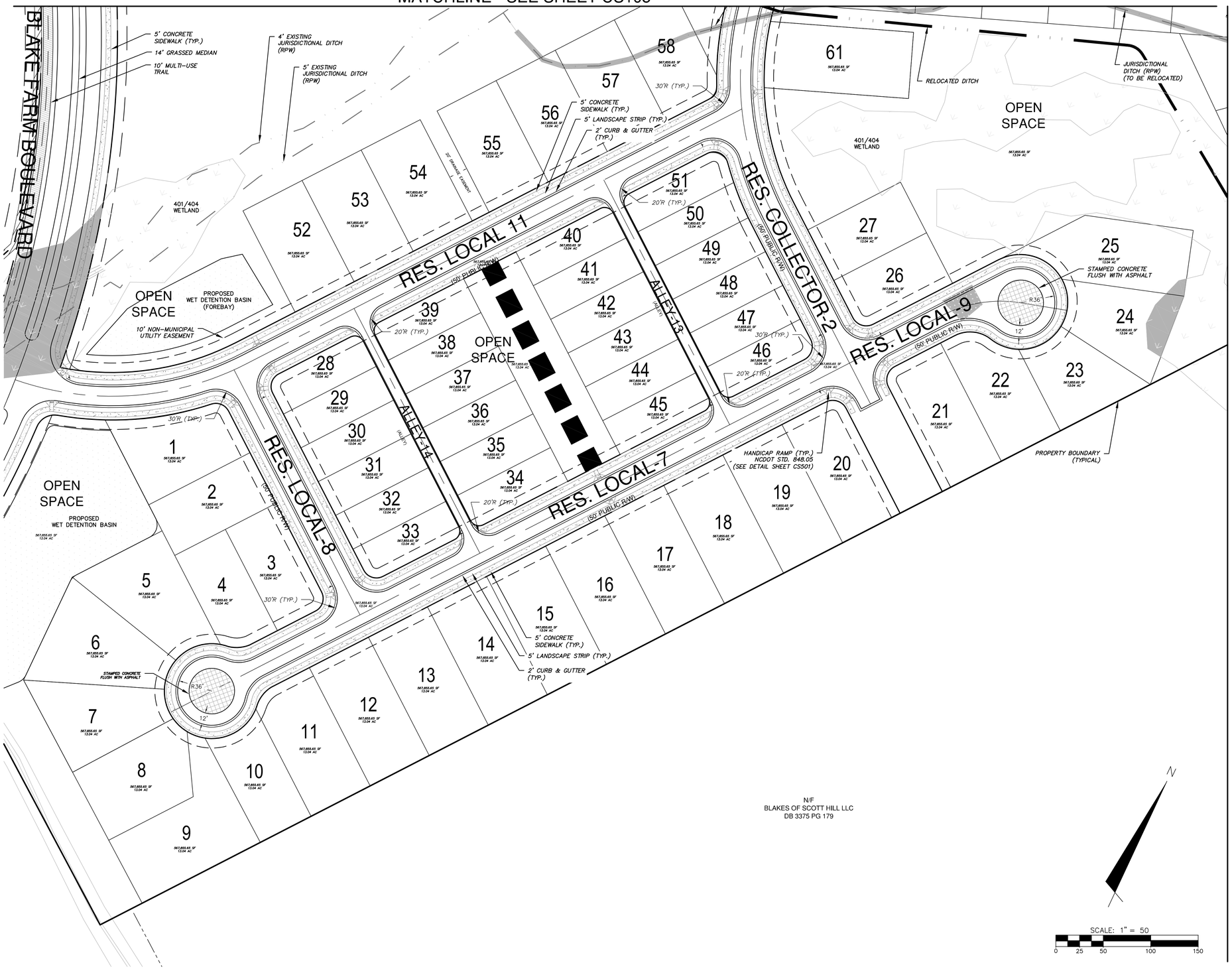

MATCHLINE - SEE SHEET CS106

LEGEND

- FIELD MAPPED, SURVEYED AND USACE APPROVED WETLANDS
- PRELIMINARY WETLAND EVALUATION (NOT FLAGGED)
- STAMPED CONCRETE FLUSH WITH ASPHALT
- WETLAND AND JURSIDICTIONAL DITCH IMPACTS

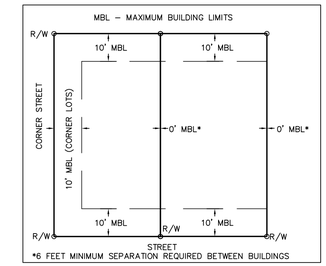

LOT SETBACK (TND LOTS 28-51 & 229-255)
NOT TO SCALE

SITE NOTES:

1. THE MINIMUM LOT SIZE IN BLAKE FARM PER THE APPROVED MDP SHALL BE NO LESS THAN 3,000 SF.

   CONVENTIONAL LOTS WILL RANGE IN SIZE FROM 5,000 SF TO 1–ACRE.

2. OPEN SPACE REQ'D: 0.03 AC/LOT
   278 LOTS X 0.03 AC./LOT = 8.34 AC.
   OPEN SPACE PROVIDED: 32.3 ACRES

3. THERE IS NO EVIDENCE OF ENDANGERED SPECIES OR HABITAT ISSUES ON THE PROPERTY. THERE ARE NO STATE CULTURAL RESOURCES FOUND ON THE PROPERTY.

4. THE TRACT IS NOT WITHIN SPECIAL FLOOD HAZARD AREA DESIGNATED BY NC FLOODPLAIN MAPPING.

5. PUBLIC STREETS ARE DESIGNED TO MEET NCDOT STANDARDS AND SPECIFICATIONS FOR COMPLETE STREETS AND NCDOT SUBDIVISION MANUAL.

6. PUBLIC SANITARY SEWER TO BE PROVIDED BY PLURIS HAMPSTEAD, LLC.

7. PUBLIC WATER TO BE PROVIDED BY PENDER COUNTY UTILITIES.

8. A BUFFER CONSISTING OF AT LEAST 1 CANOPY TREE, 2 UNDERSTORY TREES AND EITHER A GRASS OR OTHER APPROVED VEGETATIVE GROUND COVER OF AT LEAST 98% COVERAGE (EXCEPT WITHIN 4 FEET OF THE BASE OF ANY TREE OR SHRUB) OR 32 SHRUBS PER 100 LINEAR FEET WILL BE APPLIED ALONG MAIN STREET.

9. SITE IS LOCATED WITHIN FEMA FLOOD ZONE X – MINIMAL FLOOD RISK.

10. SEE SHEET G002 FOR ROADWAY SECTIONS AND PAVEMENT DESIGN. SEE SHEET CS–501 FOR SITE DETAILS.

11. SEE SHEETS CS108 & CS109 FOR PARCEL AREAS AND BOUNDARY BEARINGS & DISTANCES.

TND LOTS IN SF-1 SUBDIVISION:

1. LOTS 28 – 51 ARE TND LOTS WITH MINIMUM LOT SIZE OF 3,000 SF. SEE SITE NOTE # 1 ABOVE.
2. LOTS 229 – 255 ARE TND LOTS WITH MINIMUM LOT SIZE OF 3,000 SF. SEE SITE NOTE # 1 ABOVE.

SCALE: 1" = 50
0 25 50 100 150

REV.NO.	DESCRIPTIONS	DATE
C	ISSUED FOR PERMITTING	01-21-15
B	PRELIMINARY PLAT PENDER CO. REVIEW	10-10-14
A	75% CONSTRUCTION DOCUMENTS TO TLC FOR REVIEW	08-11-14

REVISIONS

PRELIMINARY- DO NOT USE FOR CONSTRUCTION

SEAL
NORTH CAROLINA PROFESSIONAL SEAL 038577 ENGINEER RICHARD A. MCCLAMMY
01-21-15

McKIM&CREED
243 North Front Street
Wilmington, North Carolina 28401
Phone: (910)343-1048, Fax: (910)251-8282

NC LIC. No. F-1222
www.mckimcreed.com

Trask Land CO INC
1202 Eastwood Road
Wilmington, NC 28403
(910) 799-8755

BLAKE FARM
TOPSAIL TOWNSHIP
PENDER COUNTY NORTH CAROLINA

ENLARGED SITE PLAN

DATE:	9 JANUARY 2015
MCE PROJ. #	6525-0001
DRAWN	CDN
DESIGNED	RAC
CHECKED	RAM
PROJ. MGR.	RAM

SCALE
HORIZONTAL: 1"=50'
VERTICAL: N/A

M&C FILE NUMBER CS107
DRAWING NUMBER 9

STATUS: FINAL PLAN NOT FOR CONSTRUCTION
REVISION C

PARCEL NUMBERS, AREAS, AND LAYOUTS FOR SF-1

Parcel Table

Parcel #	Area	Perimeter	Segment Lengths	Segment Bearings
1	9203.68	405.404	21.447 49.322 120.000 100.588 114.048	N87° 17' 21.46"E S52° 13' 02.45"E S37° 46' 57.55"W N52° 13' 02.45"W N56° 32' 15.87"E
2	7200.00	360.000	60.000 60.000 29.162 30.838 120.000 60.000	S37° 46' 57.55"W S37° 46' 57.55"W N52° 13' 02.45"W N52° 13' 02.45"W N37° 46' 57.55"E S52° 13' 02.45"E
3	7148.54	353.354	60.000 105.000 23.354 45.000 120.000	N37° 46' 57.55"E S52° 13' 02.45"E S7° 13' 02.45"E S37° 46' 57.55"W N52° 13' 02.45"W
4	7061.22	349.854	60.000 120.000 30.448 27.549 6.356 105.501	N37° 46' 57.55"E S52° 13' 02.45"E S37° 46' 57.55"W S60° 19' 55.98"W S79° 14' 23.78"W N52° 13' 02.45"W
5	9920.91	433.575	52.360 140.000 106.552 29.162 105.501	S45° 35' 53.16"W N76° 15' 01.34"W N37° 46' 57.55"E S52° 13' 02.45"E S52° 13' 02.45"E
6	10431.80	442.157	8.162 148.726 120.000 140.000 25.268	S18° 02' 01.07"E S68° 43' 13.60"W N0° 16' 07.54"E S76° 15' 01.34"E S1° 07' 14.11"W
7	8807.25	411.842	32.989 120.127 110.000 148.726	S41° 36' 42.51"E S36° 58' 39.16"W N52° 59' 35.65"W N68° 43' 13.60"E
8	9462.36	390.452	20.136 68.917 100.168 81.105 120.127	S72° 03' 00.87"E S30° 22' 50.96"E S37° 46' 57.55"W N52° 59' 35.65"W N36° 58' 39.16"E
9	12117.59	528.885	20.136 124.455 140.055 75.154 100.168 68.917	N84° 52' 33.03"E S52° 58' 44.63"E S37° 46' 19.95"W N52° 59' 35.65"W N37° 46' 57.55"E N30° 22' 50.96"W
10	7216.96	378.444	66.634 127.262 60.092 124.455	N35° 09' 36.52"E S52° 13' 02.45"E S37° 46' 19.95"W N52° 58' 44.63"W
11	9696.11	411.123	42.464 140.098 70.000 127.262 3.751 27.549	N37° 46' 57.55"E S52° 13' 02.45"E S37° 46' 19.95"W N52° 13' 02.45"W N5° 10' 03.12"W N15° 13' 59.12"E
12	9806.40	420.183	70.000 140.085 70.000 140.098	N37° 46' 57.55"E S52° 13' 02.45"E S37° 46' 19.95"W N52° 13' 02.45"W
13	9805.51	420.157	70.000 140.072 70.000 140.085	N37° 46' 57.55"E S52° 13' 02.45"E S37° 46' 19.95"W N52° 13' 02.45"W
14	9804.61	420.132	70.000 140.060 70.000 140.072	N37° 46' 57.55"E S52° 13' 02.45"E S37° 46' 19.95"W N52° 13' 02.45"W
15	9803.72	420.106	70.000 140.047 70.000 140.060	N37° 46' 57.55"E S52° 13' 02.45"E S37° 46' 19.95"W N52° 13' 02.45"W
16	9802.83	420.081	70.000 140.034 70.000 140.047	N37° 46' 57.55"E S52° 13' 02.45"E S37° 46' 19.95"W N52° 13' 02.45"W
17	9801.93	420.055	70.000 140.021 70.000 140.034	N37° 46' 57.55"E S52° 13' 02.45"E S37° 46' 19.95"W N52° 13' 02.45"W
18	9801.04	420.030	70.000 140.008 70.000 140.021	N37° 46' 57.55"E S52° 13' 02.45"E S37° 46' 19.95"W N52° 13' 02.45"W
19	9800.15	420.004	70.000 139.996 70.000 140.008	N37° 46' 57.55"E S52° 13' 02.45"E S37° 46' 19.95"W N52° 13' 02.45"W
20	9458.53	408.858	123.983 67.984 139.996 51.984 24.911	S52° 13' 02.48"E S37° 46' 19.95"W N52° 13' 02.45"W N37° 46' 57.55"E N82° 46' 57.55"E

Parcel Table

Parcel #	Area	Perimeter	Segment Lengths	Segment Bearings
21	9734.91	412.724	24.911 54.000 139.903 70.000 123.910	N7° 13' 02.45"W N37° 46' 57.55"E S52° 13' 02.45"E S37° 46' 37.58"W N52° 13' 02.45"W
22	8879.89	395.087	31.736 96.300 70.000 139.903 17.023 40.124	N85° 17' 01.14"E S52° 13' 02.45"E S37° 46' 37.58"W N52° 13' 02.45"W N37° 46' 57.55"E N70° 37' 29.22"E
23	7397.86	368.388	53.356 112.197 106.535 96.300	N36° 31' 46.96"E S81° 58' 29.34"E S37° 46' 37.58"W N52° 13' 02.45"W
24	8452.32	393.863	52.075 130.000 99.591 112.197	N23° 52' 40.82"W N72° 55' 02.61"E S4° 00' 54.87"E N81° 58' 29.34"W
25	10392.22	494.793	77.233 102.422 115.138 70.000 130.000	S82° 02' 01.70"W N37° 46' 57.55"E N72° 55' 02.61"E S17° 04' 57.39"E S72° 55' 02.61"W
26	6541.45	332.911	44.000 110.000 60.000 94.000 24.911	N52° 13' 02.45"W N37° 46' 57.55"E S52° 13' 02.45"E S37° 46' 57.55"W S82° 46' 57.55"W
27	6600.00	340.000	60.000 110.000 60.000 110.000	N52° 13' 02.45"W N37° 46' 57.55"E S52° 13' 02.45"E S37° 46' 57.55"W
28	4325.68	288.924	85.000 15.569 30.000 110.000 25.000 23.354	N37° 46' 57.55"E N82° 46' 57.55"E S52° 13' 02.45"E S37° 46' 57.55"W N52° 13' 02.45"W N7° 13' 02.45"W
29	4400.00	300.000	40.000 110.000 40.000 110.000	S52° 13' 02.45"E S37° 46' 57.55"W N52° 13' 02.45"W N37° 46' 57.55"E
30	4400.00	300.000	40.000 110.000 40.000 110.000	S52° 13' 02.45"E S37° 46' 57.55"W N52° 13' 02.45"W N37° 46' 57.55"E
31	4400.00	300.000	40.000 110.000 40.000 110.000	S52° 13' 02.45"E S37° 46' 57.55"W N52° 13' 02.45"W N37° 46' 57.55"E
32	4400.00	300.000	40.000 110.000 40.000 110.000	S52° 13' 02.45"E S37° 46' 57.55"W N52° 13' 02.45"W N37° 46' 57.55"E
33	4325.68	288.924	30.000 15.569 85.000 23.354 25.000 110.000	S52° 13' 02.45"E S7° 13' 02.45"E S37° 46' 57.55"W S82° 46' 57.55"W N52° 13' 02.45"W N37° 46' 57.55"E
34	4377.13	295.569	100.000 15.569 30.000 110.000 40.000	S37° 46' 57.55"W S82° 46' 57.55"W N52° 13' 02.45"W N37° 46' 57.55"E S52° 13' 02.45"E
35	4400.00	300.000	40.000 110.000 40.000 110.000	N52° 13' 02.45"W N37° 46' 57.55"E S52° 13' 02.45"E S37° 46' 57.55"W
36	4400.00	300.000	40.000 110.000 40.000 110.000	N52° 13' 02.45"W N37° 46' 57.55"E S52° 13' 02.45"E S37° 46' 57.55"W
37	4400.00	300.000	40.000 110.000 40.000 110.000	N52° 13' 02.45"W N37° 46' 57.55"E S52° 13' 02.45"E S37° 46' 57.55"W
38	4400.00	300.000	40.000 110.000 40.000 110.000	N52° 13' 02.45"W N37° 46' 57.55"E S52° 13' 02.45"E S37° 46' 57.55"W
39	4377.13	295.569	30.000 15.569 100.000 40.000 110.000	N52° 13' 02.45"W N7° 13' 02.45"W N37° 46' 57.55"E S52° 13' 02.45"E S37° 46' 57.55"W
40	4377.13	295.569	100.000 15.569 30.000 110.000 40.000	N37° 46' 57.55"E N82° 46' 57.55"E S52° 13' 02.45"E S37° 46' 57.55"W N52° 13' 02.45"W

Parcel Table

Parcel #	Area	Perimeter	Segment Lengths	Segment Bearings
41	4400.00	300.000	40.000 110.000 40.000 110.000	S52° 13' 02.45"E S37° 46' 57.55"W N52° 13' 02.45"W N37° 46' 57.55"E
42	4400.00	300.000	40.000 110.000 40.000 110.000	S52° 13' 02.45"E S37° 46' 57.55"W N52° 13' 02.45"W N37° 46' 57.55"E
43	4400.00	300.000	40.000 110.000 40.000 110.000	S52° 13' 02.45"E S37° 46' 57.55"W N52° 13' 02.45"W N37° 46' 57.55"E
44	4400.00	300.000	40.000 110.000 40.000 110.000	S52° 13' 02.45"E S37° 46' 57.55"W N52° 13' 02.45"W N37° 46' 57.55"E
45	4377.13	295.569	30.000 15.569 100.000 40.000 110.000	S52° 13' 02.45"E S7° 13' 02.45"E S37° 46' 57.55"W N52° 13' 02.45"W N37° 46' 57.55"E
46	4318.59	288.480	84.000 15.569 30.000 110.000 24.000 24.911	S37° 46' 57.55"W S82° 46' 57.55"W N52° 13' 02.45"W N37° 46' 57.55"E S52° 13' 02.45"E S7° 13' 02.45"E
47	4400.00	300.000	40.000 110.000 40.000 110.000	S52° 13' 02.45"E S37° 46' 57.55"W N52° 13' 02.45"W N37° 46' 57.55"E
48	4400.00	300.000	40.000 110.000 40.000 110.000	S52° 13' 02.45"E S37° 46' 57.55"W N52° 13' 02.45"W N37° 46' 57.55"E
49	4400.00	300.000	8.564 31.436 110.000 40.000 110.000	S52° 13' 02.45"E S52° 13' 02.45"E S37° 46' 57.55"W N52° 13' 02.45"W N37° 46' 57.55"E
50	4447.04	303.747	40.208 110.000 40.000 113.539	S47° 09' 41.63"E S37° 46' 57.55"W N52° 13' 02.45"W N37° 46' 57.55"E
51	4571.67	299.822	92.818 25.691 22.204 113.539 30.000 15.569	N37° 46' 57.55"E N88° 50' 57.09"E S41° 58' 59.21"E S37° 46' 57.55"W N52° 13' 02.45"W N7° 13' 02.45"W
52	8400.00	380.000	70.000 120.000 70.000 120.000	N37° 46' 57.55"E S52° 13' 02.45"E S37° 46' 57.55"W N52° 13' 02.45"W
53	8400.00	380.000	70.000 120.000 70.000 120.000	N37° 46' 57.55"E S52° 13' 02.45"E S37° 46' 57.55"W N52° 13' 02.45"W
54	8400.00	380.000	70.000 120.000 70.000 120.000	N37° 46' 57.55"E S52° 13' 02.45"E S37° 46' 57.55"W N52° 13' 02.45"W
55	8400.00	380.000	70.000 120.000 70.000 120.000	N37° 46' 57.55"E S52° 13' 02.45"E S37° 46' 57.55"W N52° 13' 02.45"W
56	8400.00	380.000	70.000 120.000 70.000 120.000	N37° 46' 57.55"E S52° 13' 02.45"E S37° 46' 57.55"W N52° 13' 02.45"W
57	8400.00	380.000	70.000 120.000 70.000 120.000	N37° 46' 57.55"E S52° 13' 02.45"E S37° 46' 57.55"W N52° 13' 02.45"W
58	8229.27	370.304	69.997 100.701 11.621 17.496 50.488 120.000	N38° 09' 52.87"E S51° 43' 01.58"E S25° 54' 37.56"E S5° 47' 41.54"W S37° 46' 57.55"W N52° 13' 02.45"W
59	7593.70	372.136	20.559 108.070 60.000 133.858 49.649	N30° 50' 02.39"E N69° 19' 53.04"E S20° 40' 06.96"E S69° 19' 53.04"W N7° 39' 48.26"W
60	8446.28	403.115	133.858 60.000 147.685 61.573	N69° 19' 53.04"E S20° 40' 06.96"E S69° 19' 53.04"W N7° 41' 29.26"W

Parcel Table

Parcel #	Area	Perimeter	Segment Lengths	Segment Bearings
61	10732.94	443.964	151.258 70.000 152.518 70.189	N69° 19' 53.04"E S20° 40' 06.96"E S69° 19' 53.04"W N19° 38' 14.57"W
62	8400.00	380.000	60.000 70.000 120.000 70.000 60.000	N20° 40' 06.96"W N69° 19' 53.04"E S20° 40' 06.96"E S69° 19' 53.04"W N20° 40' 06.96"W
63	8400.00	380.000	120.000 70.000 120.000 70.000	N20° 40' 06.96"W N69° 19' 53.04"E S20° 40' 06.96"E S69° 19' 53.04"W
64	8400.00	380.000	120.000 70.000 120.000 70.000	N20° 40' 06.96"W N69° 19' 53.04"E S20° 40' 06.96"E S69° 19' 53.04"W
65	7200.00	360.000	120.000 60.000 60.000 60.000 60.000	N20° 40' 06.96"W N69° 19' 53.04"E S20° 40' 06.96"E S20° 40' 06.96"E S69° 19' 53.04"W
66	7156.79	354.609	60.000 105.000 23.354 24.479 20.569 121.207	N20° 40' 06.96"W N69° 19' 53.04"E S65° 40' 06.96"E S20° 40' 06.96"E S24° 02' 08.63"E S69° 19' 53.04"W
67	7706.09	383.937	60.000 121.207 63.105 130.000 9.625	N20° 40' 06.96"W N69° 19' 53.04"E S37° 43' 59.56"E S69° 19' 53.04"W S69° 19' 53.04"W
68	7790.31	387.850	47.982 120.000 89.868 130.000	S55° 55' 05.91"E S50° 16' 05.15"W N50° 07' 11.36"W N69° 19' 53.04"E
69	8537.99	396.763	137.955 89.868 120.000 48.940	S30° 19' 36.03"W N50° 07' 11.36"W N50° 16' 05.15"E S71° 47' 04.67"E
70	11259.09	443.430	143.155 102.297 20.000 137.955 18.658 21.365	S2° 50' 02.65"E N81° 36' 37.95"W N50° 07' 11.36"W N30° 19' 36.03"E S82° 51' 02.17"E S85° 54' 18.00"E
71	8856.18	392.811	89.599 70.003 30.000 143.155 60.054	S12° 45' 36.57"E S37° 46' 37.58"W N82° 17' 15.13"W N2° 50' 02.65"W S85° 54' 18.00"E
72	8414.35	393.238	89.599 9.964 30.868 132.752 49.009 81.036 0.009	N12° 45' 36.57"W S85° 54' 18.00"E N76° 24' 32.18"E S36° 24' 12.85"E S43° 22' 04.13"W N53° 06' 14.73"W N12° 45' 36.58"W
73	7495.95	372.549	120.000 101.387 120.993 30.169	S88° 55' 20.56"E S17° 50' 18.51"W N54° 19' 13.54"W N18° 21' 47.86"E
74	7084.94	358.239	121.178 50.805 35.787 120.000 30.469	N67° 02' 31.31"E S30° 41' 34.26"E S14° 41' 11.70"W N88° 55' 20.56"W N16° 22' 47.93"W
75	8793.83	387.252	120.211 56.693 58.702 121.178 30.469	N27° 30' 35.32"E S60° 49' 42.42"E S30° 41' 34.26"E S67° 02' 31.31"W N51° 17' 42.67"W
76	6901.11	361.017	120.834 89.504 120.211 30.469	N1° 13' 09.39"W S79° 35' 29.66"E S27° 30' 35.32"W N86° 12' 37.41"W
77	7591.28	395.619	131.806 67.393 120.834 41.819 33.767	N1° 13' 09.39"W N61° 41' 27.21"E S1° 13' 09.39"E S52° 22' 16.94"W S56° 02' 58.01"W
78	10910.56	429.592	135.183 131.806 6.357 13.923 142.324	N68° 08' 07.31"E S1° 13' 09.39"E S88° 53' 29.68"W N85° 54' 18.00"W N53° 17' 12.48"W
79	7905.91	371.641	120.000 72.658 62.652 42.976 23.354 50.000	N20° 40' 06.96"W N69° 19' 53.04"E S13° 37' 47.88"E S20° 40' 06.96"E S24° 19' 53.04"W S69° 19' 53.04"W
80	7800.00	370.000	120.000 65.000 120.000 65.000	N20° 40' 06.96"W N69° 19' 53.04"E S20° 40' 06.96"E S69° 19' 53.04"W

Parcel Table

Parcel #	Area	Perimeter	Segment Lengths	Segment Bearings
81	7800.00	370.000	120.000 65.000 120.000 65.000	N20° 40' 06.96"W N69° 19' 53.04"E S20° 40' 06.96"E S69° 19' 53.04"W
82	7800.00	370.000	120.000 65.000 120.000 65.000	N20° 40' 06.96"W N69° 19' 53.04"E S20° 40' 06.96"E S69° 19' 53.04"W
83	7800.00	370.000	120.000 65.000 120.000 65.000	N20° 40' 06.96"W N69° 19' 53.04"E S20° 40' 06.96"E S69° 19' 53.04"W
84	7800.00	370.000	120.000 65.000 120.000 65.000	N20° 40' 06.96"W N69° 19' 53.04"E S20° 40' 06.96"E S69° 19' 53.04"W
85	8542.68	381.402	120.000 3.790 67.084 120.000 70.527	S71° 11' 36.87"W N20° 40' 06.96"W N11° 17' 38.17"W N71° 11' 36.87"E S11° 47' 43.93"E
86	8385.41	394.912	131.054 73.710 120.000 14.094 56.053	N71° 11' 36.87"E S4° 54' 23.62"W S71° 11' 36.87"W N0° 03' 01.35"E N4° 16' 38.13"W
87	9883.67	409.735	70.072 125.000 89.663 125.000	N39° 13' 01.13"E S55° 17' 38.72"E S39° 13' 01.13"W N46° 16' 19.02"W
88	10371.16	422.152	125.000 91.172 135.908 70.072	S46° 16' 19.02"E S41° 23' 21.09"W N37° 14' 59.32"W N48° 14' 20.83"E
89	10953.51	435.311	91.546 137.785 70.072 135.908	S56° 05' 22.66"W N28° 13' 39.63"W N57° 15' 40.52"E S37° 14' 59.32"E
90	11176.21	440.278	92.419 69.900 70.101 70.072 137.785	S64° 56' 29.09"W N18° 58' 54.10"W N18° 58' 54.10"W N66° 17' 00.22"E S28° 13' 39.63"E
91	9021.67	392.978	25.644 107.674 70.101 127.138 62.421	N33° 42' 33.78"E N77° 43' 11.59"E S18° 58' 54.10"E S73° 46' 28.14"W N17° 15' 08.79"W
92	9346.23	403.860	69.900 131.054 29.605 46.163 127.138	S18° 58' 54.10"E S71° 11' 36.87"W N13° 54' 01.94"W N17° 11' 29.47"W N73° 46' 28.14"E
93	9669.22	409.436	84.017 126.128 58.867 19.432 120.992	N90° 00' 00.00"W N11° 18' 43.16"W N87° 37' 10.99"E S53° 16' 02.69"E S17° 13' 35.55"E
94	8895.83	394.276	126.128 18.732 51.635 125.000 21.253 18.452 33.075	S11° 18' 43.16"E N90° 00' 00.00"W S76° 43' 57.23"W N12° 34' 24.70"W N77° 37' 42.29"E N77° 49' 49.27"E N81° 09' 18.20"E
95	8949.34	393.029	70.000 125.000 73.029 125.000	S76° 43' 57.23"W N13° 57' 40.85"W N76° 43' 57.23"E S12° 34' 24.70"E
96	8949.34	393.029	70.000 125.000 73.029 125.000	S75° 20' 41.07"W N15° 20' 57.01"W N75° 20' 41.07"E S13° 57' 40.85"E
97	9352.15	397.819	17.187 77.243 120.462 58.000 124.927	N20° 41' 43.27"E N72° 44' 35.76"E S16° 31' 21.97"E S59° 22' 53.04"W N30° 37' 06.96"W
98	10054.45	400.126	13.862 62.338 123.000 76.332 25.315 99.279	S69° 38' 11.03"E S30° 37' 06.96"E S59° 22' 53.04"W N30° 37' 06.96"W N19° 25' 12.83"E N70° 24' 08.76"E
99	8610.00	386.000	70.000 123.000 70.000 123.000	S30° 37' 06.96"E S59° 22' 53.04"W N30° 37' 06.96"W N59° 22' 53.04"E
100	8610.00	386.000	123.000 70.000 123.000 60.095 9.905	S59° 22' 53.04"W N30° 37' 06.96"W N59° 22' 53.04"E S30° 37' 06.96"E S30° 37' 06.96"E

Parcel Table

Parcel #	Area	Perimeter	Segment Lengths	Segment Bearings
101	9087.76	397.946	113.656 69.238 136.421 57.080 21.553	S30° 37' 06.96"E S59° 22' 53.04"W N30° 38' 41.20"W N67° 22' 06.26"E S71° 21' 14.11"E
102	9072.71	396.533	73.035 125.760 69.991 127.747	N63° 48' 50.84"E S25° 29' 30.90"E S62° 11' 14.48"W N26° 52' 47.42"W
103	9105.38	405.537	70.026 136.910 44.286 26.568 127.747	S61° 33' 57.79"W N26° 52' 47.42"W N72° 45' 53.64"E N62° 52' 03.77"E S26° 52' 47.42"E
104	7733.91	394.242	70.026 98.149 62.997 20.207 5.953 136.910	S61° 33' 57.79"W N26° 52' 47.42"W N37° 39' 48.21"E N4° 51' 00.19"E N84° 16' 43.84"E S26° 52' 47.42"E
105	10883.49	410.054	86.584 71.536 107.213 46.571 98.149	S61° 33' 57.79"W N59° 08' 04.68"W N26° 40' 28.77"E S85° 15' 55.98"E S26° 52' 47.42"E
106	8524.02	377.668	62.894 47.498 116.926 43.137 107.213	N59° 08' 04.68"W N33° 33' 35.74"W N60° 54' 55.09"E S38° 32' 21.11"E S26° 40' 28.77"W
107	11059.01	451.754	46.381 116.926 70.000 160.666 4.878 32.696 20.207	S8° 05' 16.31"W S60° 54' 55.09"W N33° 33' 35.74"W N56° 26' 24.26"E S33° 33' 35.74"E S41° 03' 12.13"E S32° 14' 46.66"W
108	11246.65	461.333	160.666 70.000 160.666 70.000	N56° 26' 24.26"E S33° 33' 35.74"E S56° 26' 24.26"W N33° 33' 35.74"W
109	11246.65	461.333	160.666 70.000 160.666 70.000	N56° 26' 24.26"E S33° 33' 35.74"E S56° 26' 24.26"W N33° 33' 35.74"W
110	10469.38	418.315	65.117 0.131 14.808 83.512 29.024 23.647 61.353 140.723	S60° 59' 47.70"W S60° 59' 47.70"W N75° 54' 16.86"W N33° 33' 35.74"W N32° 24' 47.30"W N15° 37' 10.35"E N57° 24' 53.63"E S31° 54' 23.76"E
111	10864.32	436.955	143.445 74.360 140.723 78.426	S30° 14' 55.36"E S60° 59' 47.70"W N31° 54' 23.76"W N58° 54' 00.77"E
112	9879.19	420.590	3.000 41.275 29.996 51.949 143.445 67.552 83.373	N59° 22' 53.04"E S30° 37' 06.96"E S15° 11' 20.37"W S60° 59' 47.70"W N30° 14' 55.36"W N60° 27' 19.72"E S30° 37' 06.96"E
113	11532.72	443.157	125.000 3.000 14.000 3.000 83.373 130.467 22.878 61.439	S59° 22' 53.04"W S59° 22' 53.04"W S59° 22' 53.04"W S59° 22' 53.04"W N30° 37' 06.96"W N62° 35' 18.84"E S75° 50' 48.74"E S30° 37' 06.96"E
114	9589.76	405.840	74.920 128.000 74.920 3.000 125.000	S30° 37' 06.96"E S59° 22' 53.04"W N30° 37' 06.96"W N59° 22' 53.04"E N59° 22' 53.04"E
115	9589.76	405.840	74.920 128.000 74.920 128.000	S30° 37' 06.96"E S59° 22' 53.04"W N30° 37' 06.96"W N59° 22' 53.04"E
116	10455.78	409.977	73.878 24.984 102.796 14.678 65.641 128.000	S30° 37' 06.96"E S18° 32' 04.26"W S66° 43' 36.64"W N72° 25' 34.58"W N30° 37' 06.96"W N59° 22' 53.04"E
117	10383.44	422.358	118.576 16.341 61.718 143.451 53.111 29.162	S30° 37' 06.96"E S17° 17' 48.02"W S64° 33' 19.74"W N30° 14' 55.36"W N60° 59' 47.70"E S74° 48' 39.63"E
118	10199.92	428.166	70.002 140.759 73.868 0.087 143.451	S63° 19' 14.53"W N31° 54' 24.61"W N60° 59' 47.70"E N60° 59' 47.69"E S30° 14' 55.36"E
119	9076.08	393.401	2.736 109.726 60.886 16.176 63.118 140.759	S62° 38' 27.03"W N75° 28' 20.38"W N33° 33' 35.74"W N13° 43' 05.98"E N60° 59' 47.70"E S31° 54' 24.61"E
120	11382.93	426.751	54.400 128.000 54.400 35.471 17.085 105.388 21.271 10.736	N30° 37' 06.96"W N59° 22' 53.04"E S30° 37' 06.96"E S30° 37' 06.96"E S20° 16' 23.00"W S70° 10' 46.90"W N70° 42' 43.06"W N30° 37' 06.96"W

Parcel Table

Parcel #	Area	Perimeter	Segment Lengths	Segment Bearings
121	9958.40	411.600	62.200 15.600 128.000 15.600 62.200 0.000 128.000	S30° 37' 06.96"E S30° 37' 06.96"E S59° 22' 53.04"W N30° 37' 06.96"W N30° 37' 06.96"W N59° 22' 53.18"E N59° 22' 53.04"E
122	9958.40	411.600	3.000 70.000 7.800 128.000 0.000 7.800 70.000 125.000	N59° 22' 53.04"E S30° 37' 06.96"E S30° 37' 06.96"E S59° 22' 53.04"W S59° 22' 53.18"W N30° 37' 06.96"W N30° 37' 06.96"W N59° 22' 53.04"E
123	11109.17	435.028	69.382 25.341 128.404 66.900 3.000 14.000 3.000 125.000	N30° 37' 06.96"W N19° 52' 06.14"E N67° 02' 51.01"E S30° 37' 06.96"E S59° 22' 53.04"W S59° 22' 53.04"W S59° 22' 53.04"W S59° 22' 53.04"W
124	11436.31	450.021	139.590 1.525 12.476 54.596 7.854 80.722 3.000 66.900 12.673 70.685	S25° 49' 16.32"E S60° 07' 30.04"W S59° 43' 54.46"W S59° 11' 02.77"W N75° 37' 06.96"W N30° 37' 06.96"W N59° 22' 53.04"E N30° 37' 06.96"W N68° 32' 19.77"E N68° 40' 22.07"E
125	10204.22	422.309	131.147 1.387 69.165 139.590 81.020	S21° 19' 37.93"E S64° 05' 31.14"W S62° 06' 37.53"W N25° 49' 16.32"W N68° 40' 22.07"E
126	9026.16	398.986	128.003 0.575 69.328 131.147 69.934	S21° 16' 31.54"E S68° 02' 29.00"W S66° 04' 41.15"W N21° 19' 37.93"W N68° 40' 22.07"E
127	9172.50	399.336	11.073 62.019 127.961 0.510 58.594 11.176 128.003	N68° 40' 22.07"E N69° 19' 26.18"E S20° 00' 57.53"E S69° 59' 22.82"W S69° 20' 04.78"W S68° 22' 17.11"W N21° 16' 31.54"W
128	9204.76	399.792	127.966 0.407 69.787 127.960 73.672	S18° 00' 54.30"E S71° 59' 21.92"W S71° 12' 41.45"W N19° 34' 21.67"W N71° 12' 39.30"E
129	9205.53	399.814	127.982 0.326 69.867 127.966 73.672	S16° 27' 26.92"E S73° 32' 46.06"W S72° 46' 05.61"W N18° 00' 54.30"W N72° 45' 32.11"E
130	9206.38	399.837	127.990 0.244 69.948 127.982 73.672	S14° 53' 59.55"E S75° 06' 10.20"W S74° 19' 29.75"W N16° 27' 26.92"W N74° 19' 16.76"E
131	9206.85	399.850	127.996 0.163 70.030 127.990 73.672	S13° 20' 32.18"E S76° 39' 34.32"W S75° 52' 53.88"W N14° 53' 59.55"W N75° 52' 44.13"E
132	9207.16	399.859	73.672 127.999 0.082 70.111 127.996	N77° 26' 11.50"E S11° 47' 04.81"E S78° 12' 58.44"W S77° 26' 18.01"W N13° 20' 32.18"W
133	9207.06	399.857	70.192 127.999 73.672 127.993	S78° 59' 42.13"W N11° 47' 04.81"W N78° 59' 57.88"E S10° 13' 37.44"E
134	9207.06	399.857	70.192 127.993 73.672 127.999	S80° 33' 02.99"W N10° 13' 37.44"W N80° 32' 47.24"E S8° 40' 10.07"E
135	9207.29	399.864	73.672 128.000 70.111 0.082 127.999	N82° 06' 33.62"E S7° 06' 42.70"E S82° 06' 40.14"W S81° 19' 46.68"W N8° 40' 10.07"W
136	12345.29	482.413	56.784 11.217 13.001 164.840 66.883 13.792 148.042 7.854	N59° 23' 41.15"E N59° 42' 09.85"E S30° 37' 06.96"E S30° 37' 06.96"E S72° 26' 16.01"W N69° 24' 10.73"W N30° 37' 06.96"W N14° 22' 53.04"E
137	10330.20	417.211	1.624 18.452 66.042 99.234 95.765 136.093	S77° 58' 09.25"W S77° 49' 49.27"W S77° 12' 47.07"W N16° 11' 02.66"W N54° 38' 10.98"E S14° 17' 23.09"E
138	10894.22	443.225	7.449 69.530 136.093 76.033 154.120	N90° 00' 00.00"W S84° 03' 14.62"W N14° 17' 23.09"W N71° 05' 45.57"E S14° 19' 40.07"E
139	11884.39	473.995	12.737 64.288 154.120 71.548 171.303	S89° 04' 34.43"W N90° 00' 00.00"W N14° 19' 40.07"W N77° 02' 25.24"E S15° 22' 53.93"E
140	12673.51	494.704	71.198 171.303 73.633 178.570	S82° 59' 19.42"W N15° 22' 53.93"W N77° 02' 25.24"E S14° 20' 51.05"E

REV.NO.	DESCRIPTIONS	DATE
C	ISSUED FOR PERMITTING	01/21/15
B	PRELIMINARY PLAT PENDER CO. REVIEW	10/10/14
A	75% CONSTRUCTION DOCUMENTS TO TLC FOR REVIEW	08/11/14

REVISIONS

SEAL

PRELIMINARY- DO NOT USE FOR CONSTRUCTION

SEAL

NORTH CAROLINA PROFESSIONAL SEAL 038577 ENGINEER RICHARD A. [illegible]SEN 01-21-15

MCKIM&CREED

243 North Front Street
Wilmington, North Carolina 28401
Phone: (910)343-1048, Fax: (910)251-8282

NC LIC. No. F-1222
www.mckimcreed.com

Trask Land CO INC

1202 Eastwood Road
Wilmington, NC 28403
(910) 799-8755

BLAKE FARM — EST 1946 —

BLAKE FARM
TOPSAIL TOWNSHIP
PENDER COUNTY NORTH CAROLINA

PARCEL INFORMATION TABLES

DATE:	9 JANUARY 2015
MCE PROJ. #	6525-0001
DRAWN	CDN
DESIGNED	RAC
CHECKED	RAM
PROJ. MGR.	RAM

SCALE
HORIZONTAL: N/A
VERTICAL: N/A

M&C FILE NUMBER CS108
DRAWING NUMBER 10

STATUS: FINAL PLAN NOT FOR CONSTRUCTION
REVISION C

S:\6525\0001\80-Drawings\CS108-109_065250001.dwg, 1/27/2015 4:20:38 PM, cnursey

PARCEL NUMBERS, AREAS, AND LAYOUTS FOR SF-1

Parcel Table				
Parcel #	Area	Perimeter	Segment Lengths	Segment Bearings
141	12247.58	490.660	68.637 178.570 69.925 173.527	S72° 50' 49.12"W N14° 20' 51.05"W N77° 02' 25.24"E S13° 52' 24.45"E
142	11840.45	472.009	77.136 173.527 69.443 151.902	S62° 16' 28.44"W N13° 52' 24.45"W N78° 50' 13.01"E S15° 54' 49.79"E
143	9427.60	409.394	92.327 151.902 62.445 102.720	S49° 59' 02.58"W N15° 54' 49.79"W N87° 15' 59.50"E S29° 00' 59.23"E
144	7757.90	369.298	120.000 69.295 120.000 60.004	S69° 15' 38.31"W N18° 31' 16.74"W N73° 41' 48.20"E S18° 31' 16.74"E
145	7478.65	364.644	41.815 120.000 11.572 36.455 0.263 0.315 16.042 120.000 18.183	S14° 45' 27.73"E S73° 41' 48.20"W N15° 55' 58.39"W N14° 23' 44.16"W N13° 14' 19.68"W N13° 13' 13.08"W N13° 39' 22.31"W N75° 54' 58.70"E S13° 38' 52.06"E
146	7602.24	366.704	66.701 120.000 60.003 120.000	S15° 40' 57.81"E S75° 54' 58.70"W N15° 40' 57.81"W N72° 43' 05.68"E
147	7602.24	366.704	66.701 120.000 60.003 120.000	S18° 52' 50.83"E S72° 43' 05.68"W N18° 52' 50.83"W N69° 31' 12.66"E
148	7602.24	366.704	66.701 120.000 60.003 120.000	S22° 04' 43.85"E S69° 31' 12.66"W N22° 04' 43.85"W N66° 19' 19.64"E
149	7602.24	366.704	60.003 120.000 66.701 120.000	N25° 16' 36.88"W N63° 07' 26.61"E S25° 16' 36.88"E S66° 19' 19.64"W
150	7602.24	366.704	66.701 120.000 60.003 120.000	S28° 28' 29.90"E S63° 07' 26.61"W N28° 28' 29.90"W N59° 55' 33.59"E
151	7602.24	366.704	66.701 120.000 60.003 120.000	S31° 40' 22.92"E S59° 55' 33.59"W N31° 40' 22.92"W N56° 43' 40.57"E
152	7602.24	366.704	66.701 120.000 60.003 120.000	S34° 52' 15.95"E S56° 43' 40.57"W N34° 52' 15.95"W N53° 31' 47.54"E
153	7602.24	366.704	60.003 120.000 66.701 120.000	N38° 04' 08.97"W N50° 19' 54.52"E S38° 04' 08.97"E S53° 31' 47.54"W
154	7602.24	366.704	120.000 66.701 120.000 60.003	N47° 08' 01.50"E S41° 16' 01.99"E S50° 19' 54.52"W N41° 16' 01.99"W
155	7602.24	366.704	66.701 120.000 60.003 120.000	S44° 27' 55.02"E S47° 08' 01.50"W N44° 27' 55.02"W N43° 56' 08.47"E
156	7380.22	363.004	33.041 29.965 120.000 26.956 33.041 120.000	S47° 30' 03.74"E S46° 46' 57.63"E S43° 56' 08.47"W N46° 46' 57.63"W N47° 30' 03.74"W N42° 29' 56.26"E
157	7200.00	360.000	60.000 120.000 60.000 120.000	N47° 30' 03.74"W N42° 29' 56.26"E S47° 30' 03.74"E S42° 29' 56.26"W
158	7200.00	360.000	60.000 60.000 60.000 120.000 60.000	N42° 29' 56.26"E N42° 29' 56.26"E S47° 30' 03.74"E S42° 29' 56.26"W N47° 30' 03.74"W
159	7756.83	373.423	24.911 114.256 60.000 130.256 44.000	N87° 29' 56.26"E S47° 30' 03.74"E S42° 29' 56.26"W N47° 30' 03.74"W N42° 29' 56.26"E
160	7815.37	380.512	130.256 60.000 130.256 60.000	S47° 30' 03.74"E S42° 29' 56.26"W N47° 30' 03.74"W N42° 29' 56.26"E

Parcel Table				
Parcel #	Area	Perimeter	Segment Lengths	Segment Bearings
161	7200.00	360.000	60.000 120.000 60.000 120.000	S42° 29' 56.26"W N47° 30' 03.74"W N42° 29' 56.26"E S47° 30' 03.74"E
162	7141.45	352.911	24.911 44.000 120.000 60.000 104.000	S2° 30' 03.74"E S42° 29' 56.26"W N47° 30' 03.74"W N42° 29' 56.26"E S47° 30' 03.74"E
163	7200.00	360.000	60.000 60.000 60.000 120.000 60.000	S42° 29' 56.26"W S42° 29' 56.26"W N47° 30' 03.74"W N42° 29' 56.26"E S47° 30' 03.74"E
164	7200.00	360.000	60.000 120.000 60.000 120.000	N47° 30' 03.74"W N42° 29' 56.26"E S47° 30' 03.74"E S42° 29' 56.26"W
165	7200.00	360.000	120.000 60.000 120.000 60.000	S42° 29' 56.26"W N47° 30' 03.74"W N42° 29' 56.26"E S47° 30' 03.74"E
166	7199.90	360.005	9.847 120.000 9.848 50.155 120.000 50.155	N46° 23' 40.99"W N42° 29' 56.26"E S46° 23' 40.99"E S47° 30' 03.74"E S42° 29' 56.26"W N47° 30' 03.74"W
167	8991.91	392.623	120.000 92.623 120.000 59.999	S42° 29' 56.26"W N38° 56' 20.94"W N58° 11' 34.07"E S38° 32' 52.08"E
168	8741.78	388.030	120.000 88.031 120.000 59.999	S58° 11' 34.07"W N25° 03' 59.77"W N71° 40' 26.38"E S25° 03' 59.77"E
169	8741.78	388.030	120.000 88.031 120.000 59.999	S71° 40' 26.38"W N11° 35' 07.46"W N85° 09' 18.69"E S11° 35' 07.46"E
170	8761.47	388.375	120.000 88.235 120.000 60.139	S85° 09' 18.69"W N1° 54' 41.47"E S81° 19' 55.75"E S1° 54' 41.47"W
171	8761.47	388.375	120.000 88.235 120.000 19.547 0.361 40.232	N81° 19' 55.75"W N15° 25' 27.03"E S67° 49' 10.20"E S19° 59' 04.23"W S17° 44' 52.82"W S13° 11' 15.62"W
172	8760.47	388.356	120.000 88.217 120.000 60.139	N67° 49' 10.20"W N28° 56' 07.56"E S54° 18' 56.00"E S28° 56' 12.58"W
173	8002.65	374.303	30.290 120.000 74.259 120.000 29.754	S39° 05' 45.81"W N54° 18' 56.00"W N40° 27' 28.94"E S47° 30' 03.74"E S42° 29' 56.24"W
174	8479.35	383.185	83.061 120.000 49.106 11.018 120.000	N47° 15' 28.54"E S36° 28' 31.62"E S47° 58' 17.84"W S42° 29' 56.47"W N47° 30' 03.74"W
175	8761.90	388.395	60.149 120.000 88.246 120.000	S60° 15' 29.69"W N36° 28' 31.62"W N60° 15' 56.86"E S22° 57' 39.18"E
176	8761.38	388.378	60.147 120.000 88.230 120.000	S73° 51' 08.61"W N22° 57' 39.18"W N73° 49' 59.72"E S9° 27' 14.28"E
177	8761.83	388.363	60.128 120.000 88.235 120.000	S87° 18' 25.85"W N9° 27' 14.28"W N87° 18' 22.54"E S4° 03' 45.32"W
178	8760.84	388.375	120.000 88.234 120.000 60.141	N4° 03' 45.32"E S79° 12' 06.86"E S17° 34' 27.83"W N79° 12' 41.41"W
179	8378.17	381.407	120.000 81.292 120.000 14.542 45.573	N17° 34' 27.83"E S66° 16' 29.38"E S27° 45' 22.52"W N61° 36' 51.41"W N67° 15' 59.01"W
180	7776.95	370.184	120.000 70.167 120.000 60.017	N27° 45' 22.52"E S58° 50' 41.47"E S32° 36' 46.04"W N58° 40' 49.17"W

Parcel Table				
Parcel #	Area	Perimeter	Segment Lengths	Segment Bearings
181	7892.37	372.142	120.000 72.125 120.000 60.017	N32° 36' 46.04"E S54° 02' 48.01"E S38° 24' 17.48"W N53° 57' 24.74"W
182	7762.04	369.907	120.000 69.890 120.000 60.017	N38° 24' 17.48"E S49° 14' 00.31"E S43° 07' 41.91"W N49° 14' 00.31"W
183	7762.04	369.907	120.000 69.890 120.000 60.017	N43° 07' 41.91"E S44° 30' 35.87"E S47° 51' 06.34"W N44° 30' 35.87"W
184	7762.04	369.907	60.017 120.000 69.890 120.000	N39° 47' 11.44"W N47° 51' 06.34"E S39° 47' 11.44"E S52° 34' 30.78"W
185	7762.04	369.907	60.017 120.000 46.848 23.042 120.000	N35° 03' 47.01"W N52° 34' 30.78"E S35° 03' 47.01"E S35° 03' 47.01"E S57° 17' 55.21"W
186	7762.04	369.907	60.017 120.000 69.890 120.000	N30° 20' 22.57"W N57° 17' 55.21"E S30° 20' 22.57"E S62° 01' 19.64"W
187	7762.04	369.907	60.017 120.000 69.890 120.000	N25° 36' 58.14"W N62° 01' 19.64"E S25° 36' 58.14"E S66° 44' 44.08"W
188	7762.04	369.907	60.017 120.000 69.890 120.000	N20° 53' 33.71"W N66° 44' 44.08"E S20° 53' 33.71"E S71° 28' 08.51"W
189	7621.21	367.474	51.569 120.000 67.460 120.000 8.445 0.000	N16° 30' 06.05"W N71° 28' 08.51"E S16° 18' 22.19"E S75° 01' 52.96"W N14° 43' 13.77"W N14° 28' 20.76"W
190	7727.91	368.435	68.435 120.000 60.000 120.000	N16° 58' 45.89"W N75° 01' 52.96"E S16° 58' 45.89"E S71° 00' 35.26"W
191	7727.91	368.435	68.435 120.000 39.963 20.037 120.000	N21° 00' 03.59"W N71° 00' 35.26"E S21° 00' 03.59"E S21° 00' 03.59"E S66° 59' 17.57"W
192	7386.43	363.003	60.000 120.000 38.613 24.391 120.000	S24° 11' 22.21"E S65° 33' 17.64"W N24° 26' 42.36"W N23° 43' 42.40"W N66° 59' 17.57"E
193	7200.00	360.000	60.000 120.000 60.000 120.000	S24° 26' 42.85"E S65° 33' 17.64"W N24° 26' 42.36"W N65° 33' 17.64"E
194	7516.88	365.092	120.000 60.000 120.000 28.616 36.477	N65° 33' 17.64"E S24° 55' 16.61"E S63° 07' 33.36"W N25° 39' 34.50"W N24° 26' 42.36"W
195	8014.73	373.009	120.000 60.000 120.000 73.009	N63° 07' 33.36"E S29° 58' 21.52"E S56° 55' 43.59"W N29° 58' 21.52"W
196	8014.73	373.009	120.000 60.000 120.000 73.009	N56° 55' 43.59"E S36° 10' 11.29"E S50° 43' 53.82"W N36° 10' 11.29"W
197	7877.59	370.770	120.000 60.000 120.000 10.332 60.437	N50° 43' 53.82"E S42° 16' 29.97"E S45° 36' 05.54"W N44° 23' 54.46"W N41° 50' 00.32"W
198	7200.00	360.000	120.000 60.000 120.000 60.000	N45° 36' 05.54"E S44° 23' 54.46"E S45° 36' 05.54"W N44° 23' 54.46"W
199	7200.00	360.000	120.000 60.000 120.000 60.000	N45° 36' 05.54"E S44° 23' 54.46"E S45° 36' 05.54"W N44° 23' 54.46"W
200	7200.00	360.000	120.000 60.000 13.083 106.917 60.000	N45° 36' 05.54"E S44° 23' 54.46"E S45° 36' 05.54"W S45° 36' 05.54"W N44° 23' 54.46"W

Parcel Table				
Parcel #	Area	Perimeter	Segment Lengths	Segment Bearings
201	11022.21	439.585	106.917 151.648 53.579 11.087 33.873 82.481	N45° 36' 05.54"E S24° 27' 21.80"E S65° 02' 55.99"W N78° 02' 52.53"W N42° 51' 43.32"W N44° 23' 54.46"W
202	9293.37	421.634	13.083 51.847 145.046 60.011 151.648	N45° 36' 05.54"E N78° 33' 15.54"E S23° 20' 49.52"E S66° 05' 54.34"W N24° 27' 21.80"W
203	8327.08	398.997	61.327 132.712 28.556 31.354 145.046	N78° 33' 15.54"E S23° 18' 15.15"E S66° 57' 50.43"W S66° 56' 33.43"W N23° 20' 49.52"W
204	7718.83	375.966	61.305 119.500 62.448 132.712	N78° 33' 15.54"E S24° 28' 39.08"E S66° 06' 32.79"W N23° 18' 15.15"W
205	9104.03	383.341	14.528 58.575 123.000 46.819 16.326 26.462 97.631	S71° 54' 15.83"E S30° 37' 06.96"E S59° 22' 53.04"W N30° 37' 06.96"W N31° 30' 33.63"W N16° 17' 16.29"E N65° 53' 34.09"E
206	7380.00	366.000	60.000 123.000 60.000 123.000	S30° 37' 06.96"E S59° 22' 53.04"W N30° 37' 06.96"W N59° 22' 53.04"E
207	9054.34	383.167	16.571 66.539 0.009 118.374 64.357 15.042 102.276	N18° 11' 50.44"E N66° 23' 54.23"E S28° 46' 14.07"E S28° 46' 14.07"E S63° 11' 55.34"W N73° 42' 35.81"W N30° 37' 06.96"W
208	8510.72	379.884	118.374 74.922 115.839 70.749	N28° 46' 14.07"W N65° 05' 03.54"E S26° 46' 13.10"E S63° 11' 55.34"W
209	8404.54	376.804	115.839 74.942 0.001 115.252 70.771	N26° 46' 13.10"W N63° 42' 22.26"E S24° 41' 53.48"E S24° 41' 53.71"E S63° 11' 55.34"W
210	10022.20	428.422	3.000 5.277 13.778 136.016 68.389 144.977 56.985	S26° 48' 04.66"E N63° 11' 55.34"E S51° 45' 38.93"E S26° 48' 04.66"E S68° 40' 40.24"W N26° 48' 04.66"W N63° 11' 55.34"E
211	9647.49	419.893	138.447 68.078 144.977 68.391	N26° 48' 04.66"W N63° 11' 55.34"E S26° 48' 04.66"E S68° 40' 40.24"W
212	9202.93	406.832	131.917 68.078 138.447 68.391	N26° 48' 04.66"W N63° 11' 55.34"E S26° 48' 04.66"E S68° 40' 40.24"W
213	9640.56	403.397	131.917 71.425 77.250 37.642 16.374 68.789	S26° 48' 04.66"E S68° 30' 43.83"W N30° 37' 06.96"W N30° 37' 06.96"W N16° 17' 24.19"E N63° 11' 55.34"E
214	7380.00	366.000	60.000 123.000 60.000 3.000 120.000	N30° 37' 06.96"W N59° 22' 53.04"E S30° 37' 06.96"E S59° 22' 53.04"W S59° 22' 53.04"W
215	9280.00	407.357	77.250 123.699 22.581 46.827 120.000 3.000 14.000	S30° 37' 06.96"E S66° 41' 28.16"W N74° 53' 41.79"W N30° 37' 06.96"W N59° 22' 53.04"E N59° 22' 53.04"E N59° 22' 53.04"E
216	7668.92	360.535	122.996 50.167 14.968 98.078 24.965 49.331 0.030	N27° 15' 30.29"W N63° 14' 02.76"E S73° 26' 42.53"E S30° 37' 06.96"E S18° 56' 12.27"W S63° 16' 03.79"W S62° 44' 28.47"W
217	8382.37	382.296	122.997 69.549 0.072 122.996 66.681	N28° 37' 39.98"W N62° 03' 24.82"E N62° 38' 50.04"E S27° 15' 30.29"E S62° 03' 23.60"W
218	8386.75	382.369	123.000 0.072 69.569 122.997 66.730	N29° 59' 00.89"W N60° 00' 06.27"E N60° 41' 14.38"E S28° 37' 39.98"E S60° 41' 01.67"W
219	8386.90	382.375	123.005 0.143 69.527 123.000 66.699 0.000	N31° 22' 04.12"W N58° 42' 57.61"E N59° 18' 59.63"E S29° 59' 00.89"E S59° 18' 39.10"W S58° 37' 22.49"W
220	8451.87	380.129	116.162 12.912 61.271 123.005 66.779	N33° 15' 55.51"W N21° 31' 30.97"E N58° 01' 57.15"E S31° 22' 04.12"E S57° 56' 14.69"W

Parcel Table				
Parcel #	Area	Perimeter	Segment Lengths	Segment Bearings
221	11168.70	458.707	153.784 68.437 157.969 17.827 60.690	N60° 19' 01.00"E S29° 15' 18.91"E S59° 11' 55.45"W N68° 17' 16.98"W N15° 37' 30.17"W
222	10404.39	437.173	140.272 25.653 45.626 153.784 71.839	N60° 00' 09.21"E S29° 59' 24.57"E S29° 15' 18.91"E S60° 19' 01.00"W N18° 40' 26.43"W
223	9461.35	409.539	126.875 1.228 69.444 140.272 71.719	N60° 11' 50.93"E S34° 42' 14.11"E S32° 42' 52.17"E S60° 00' 09.21"W N21° 58' 36.39"W
224	9062.64	388.692	126.875 65.477 14.917 105.341 76.082	S60° 11' 50.93"W N25° 07' 59.13"W N16° 00' 27.57"E N59° 35' 38.50"E S34° 42' 14.11"E
225	11218.19	456.459	158.785 63.251 16.142 149.844 68.437	N60° 19' 01.00"E S30° 37' 06.96"E S16° 31' 46.72"W S62° 12' 40.75"W N29° 15' 18.91"W
226	11246.39	455.842	153.413 61.632 10.733 158.785 45.626 25.653	N60° 00' 09.21"E S34° 20' 08.64"E S30° 37' 06.96"E S60° 19' 01.00"W N29° 15' 18.91"W N29° 59' 24.57"W
227	10410.81	437.636	141.812 71.738 153.413 69.444 1.228	N60° 11' 50.93"E S42° 04' 17.85"E S60° 00' 09.21"W N32° 42' 52.17"W N34° 42' 14.11"W
228	10059.56	420.562	141.812 76.082 122.109 13.091 67.468	S60° 11' 50.93"W N34° 42' 14.11"W N61° 37' 48.50"E S80° 52' 40.72"E S44° 23' 54.46"E
229	4610.12	298.377	86.257 25.126 25.820 112.761 32.427 15.986	N30° 10' 45.33"W N13° 19' 57.94"E N58° 50' 29.21"E S30° 43' 36.22"E S58° 23' 44.96"W N74° 44' 58.22"W
230	4675.40	308.352	112.761 42.208 112.597 40.785	N30° 43' 36.22"W N59° 30' 55.93"E S30° 00' 10.74"E S59° 16' 50.05"W
231	4671.34	308.137	112.597 42.212 112.536 40.792	N30° 00' 10.74"W N60° 21' 07.39"E S29° 16' 48.22"E S60° 15' 59.04"W
232	4671.35	308.126	112.536 42.216 112.579 40.794	N29° 16' 48.22"W N61° 11' 19.16"E S28° 33' 21.24"E S61° 15' 08.40"W
233	6499.69	335.106	112.579 30.200 21.113 92.596 17.691 60.927	N28° 33' 21.24"W N61° 54' 22.42"E S81° 13' 05.37"E S44° 23' 54.46"E S9° 03' 49.08"W S62° 28' 53.76"W
234	6037.86	324.474	37.370 14.602 85.913 27.663 45.926 113.000	N61° 05' 48.93"E S77° 03' 16.76"E S38° 54' 16.84"E S9° 31' 19.38"W S61° 09' 55.43"W N29° 12' 31.25"W
235	5170.47	317.513	46.467 113.000 45.006 113.000 0.040	N60° 24' 39.54"E S29° 12' 31.25"E S60° 24' 39.54"W N29° 58' 09.67"W N60° 01' 49.16"E
236	5169.99	317.504	46.423 113.000 45.002 110.000 2.999 0.080	N59° 39' 00.08"E S29° 58' 09.67"E S59° 39' 01.25"W N30° 43' 47.83"W N30° 43' 47.83"W N59° 34' 26.49"E
237	5685.53	318.521	2.999 110.000 30.173 23.879 87.377 16.669 47.423	S30° 43' 47.83"E S30° 43' 47.83"E S59° 00' 54.22"W N78° 34' 00.69"W N37° 54' 13.17"W N9° 17' 25.57"E N58° 52' 58.75"E
238	5769.81	330.094	0.232 64.557 113.000 0.034 31.011 14.188 107.073	N57° 53' 23.45"E N58° 24' 04.16"E S31° 05' 21.72"E S58° 54' 39.28"W S58° 38' 54.45"W N81° 30' 48.82"W N43° 56' 26.53"W
239	4588.45	307.211	39.964 113.000 41.248 113.000	S59° 14' 11.18"W N31° 05' 21.72"W N59° 14' 10.18"E S30° 26' 17.92"E
240	4588.46	307.212	39.964 113.000 41.248 113.000	S59° 53' 13.98"W N30° 26' 17.92"W N59° 53' 13.98"E S29° 47' 14.13"E

Parcel Table				
Parcel #	Area	Perimeter	Segment Lengths	Segment Bearings
241	4588.44	307.211	113.000 41.248 112.999 39.964	N29° 47' 14.13"W N60° 32' 17.77"E S29° 08' 10.33"E S60° 32' 13.78"W
242	4366.27	301.607	16.201 29.664 0.068 112.999 40.400 0.011 102.264	S13° 58' 31.10"W S61° 06' 28.92"W S60° 51' 45.68"W N29° 08' 10.33"W N61° 10' 57.48"E N61° 30' 05.61"E S28° 47' 14.85"E
243	6451.85	336.471	17.258 60.716 113.000 41.525 103.972	N4° 06' 24.45"E N57° 51' 53.92"E S31° 40' 33.63"E S58° 00' 02.62"W N47° 30' 03.74"W
244	4764.56	310.329	113.000 41.527 113.000 0.034 42.768	S31° 01' 46.06"E S58° 38' 50.16"W N31° 40' 33.63"W N58° 36' 55.54"E N58° 38' 50.16"E
245	4764.85	310.334	42.804 113.000 41.529 113.000	N59° 17' 41.51"E S30° 22' 58.34"E S59° 17' 37.80"W N31° 01' 46.06"W
246	4765.26	310.340	113.000 42.808 112.998 41.533	N30° 22' 58.34"W N59° 56' 32.08"E S29° 44' 10.39"E S59° 56' 25.64"W
247	4765.80	310.347	41.538 112.998 42.814 112.996	S60° 35' 13.73"W N29° 44' 10.39"W N60° 35' 22.91"E S29° 05' 22.15"E
248	5186.41	313.164	16.228 102.384 41.499 112.996 40.057	S70° 57' 18.60"E S24° 23' 11.69"E S61° 14' 00.87"W N29° 05' 22.15"W N61° 12' 58.82"E
249	6401.29	329.856	13.216 88.359 27.861 52.501 112.995 0.170 34.752	N84° 23' 11.95"W N47° 30' 03.74"W N4° 45' 51.94"E N57° 24' 48.87"E S32° 12' 09.86"E S57° 47' 54.74"W S57° 31' 30.85"W
250	4949.02	313.588	112.995 44.439 112.997 0.136 43.022	N32° 12' 09.86"W N58° 07' 19.29"E S31° 33' 11.56"E S58° 26' 52.12"W S58° 07' 23.89"W
251	4949.40	313.597	44.441 112.998 0.102 43.058 112.997	N58° 46' 17.66"E S30° 54' 13.12"E S59° 05' 49.64"W S58° 46' 21.34"W N31° 33' 11.56"W
252	4949.93	313.608	112.998 44.446 112.999 0.068 43.097	N30° 54' 13.12"W N59° 25' 16.22"E S30° 15' 14.44"E S59° 44' 47.40"W S59° 25' 18.98"W
253	4950.60	313.621	43.136 112.999 44.451 113.000 0.034	S60° 04' 16.88"W N30° 15' 14.44"W N60° 04' 15.04"E S29° 36' 15.47"E S60° 23' 45.45"W
254	4951.41	313.635	43.177 113.000 44.459 113.000	S60° 43' 15.12"W N29° 36' 15.47"W N60° 43' 14.20"E S28° 57' 16.12"E
255	5772.24	319.031	14.170 35.123 113.000 43.442 27.248 86.048	S18° 18' 33.43"W S61° 18' 34.60"W N28° 57' 16.12"W N61° 21' 46.81"E S67° 39' 16.81"E S19° 23' 55.42"E
256	10866.65	487.417	34.566 34.566 34.566 34.566 125.000 0.474 18.467 73.831 117.557 13.824	S61° 46' 00.91"W N61° 45' 42.18"E S61° 45' 42.18"W S61° 15' 46.28"W N28° 59' 11.66"W N61° 01' 00.27"E N61° 08' 57.29"E N61° 47' 41.81"E S22° 18' 38.73"E S22° 31' 37.80"W
257	9828.40	407.254	125.000 77.409 125.000 24.950 54.896	S28° 59' 11.66"E S60° 27' 17.43"W N30° 06' 13.49"W N60° 04' 14.87"E N60° 37' 45.78"E
258	9830.27	407.284	125.000 77.423 125.000 30.962 48.899	S30° 06' 13.49"E S59° 20' 15.21"W N31° 13' 16.08"W N58° 59' 43.68"E N59° 33' 14.98"E
259	9833.08	407.329	77.445 125.000 36.978 42.905 125.000	S58° 13' 12.04"W N32° 20' 19.83"W N57° 55' 11.47"E N58° 28' 43.35"E S31° 13' 16.08"E
260	11770.38	437.145	21.912 115.336 40.720 32.964 36.913 125.000 64.300	N85° 57' 45.82"W N47° 30' 03.74"W N53° 36' 49.10"E N56° 54' 50.70"E N57° 24' 10.53"E S32° 20' 19.83"E S56° 14' 23.12"W

Parcel Table				
Parcel #	Area	Perimeter	Segment Lengths	Segment Bearings
261	8944.45	387.147	117.179 73.831 125.000 56.910 14.226	S32° 14' 14.00"E S61° 47' 41.81"W N28° 43' 17.62"W N61° 40' 01.99"E S77° 39' 33.78"E
262	9370.49	399.928	125.000 76.091 125.000 18.467 0.474 54.896	N29° 45' 16.78"W N60° 45' 42.80"E S28° 43' 17.62"E S61° 08' 57.29"W S61° 01' 00.27"W S60° 37' 45.78"W
263	9372.02	399.952	125.000 76.103 125.000 24.950 48.899	N30° 47' 16.55"W N59° 43' 43.34"E S29° 45' 16.78"E S60° 04' 14.87"W S59° 33' 14.98"W
264	9374.30	399.989	76.122 125.000 30.962 42.905 125.000	N58° 41' 43.11"E S30° 47' 16.55"E S58° 59' 43.68"W S58° 28' 43.35"W N31° 49' 17.22"W
265	9377.35	400.038	125.000 76.147 125.000 36.978 36.913	N32° 51' 19.11"W N57° 39' 41.83"E S31° 49' 17.22"E S57° 55' 11.47"W S57° 24' 10.53"W
266	11170.07	421.641	108.831 26.612 53.545 33.970 125.000 32.964 40.720	N47° 30' 03.74"W N1° 33' 25.75"E N54° 43' 06.58"E N56° 54' 50.70"E S32° 51' 19.11"E S56° 54' 50.70"W S53° 36' 49.10"W
267	10330.55	405.307	22.778 84.785 119.977 67.700 110.068	S9° 04' 04.68"W S61° 18' 48.97"W N31° 47' 45.97"W N61° 01' 53.66"E S47° 56' 48.25"E
268	7912.76	371.960	119.977 65.115 119.927 66.941	S31° 47' 45.97"E S60° 15' 48.25"W N32° 40' 11.19"W N60° 09' 10.61"E
269	7910.98	371.904	119.927 65.114 119.922 66.941	S32° 40' 11.19"E S59° 21' 03.65"W N33° 32' 36.41"W N59° 16' 45.39"E
270	7912.06	371.935	119.922 65.112 119.961 66.941	S33° 32' 36.41"E S58° 26' 19.15"W N34° 25' 01.62"W N58° 24' 20.17"E
271	7916.47	372.061	119.961 65.113 120.043 66.945	S34° 25' 01.62"E S57° 31' 34.67"W N35° 17' 27.02"W N57° 31' 54.87"E
272	7604.38	366.928	120.043 35.670 24.108 120.128 35.444 31.535	S35° 17' 27.02"E S56° 49' 12.76"W S55° 26' 20.64"W N38° 43' 37.22"W N55° 10' 45.10"E N56° 53' 21.34"E
273	8049.14	363.809	23.350 39.369 68.011 67.207 120.128 45.744	N89° 00' 55.73"W N47° 30' 03.74"W N37° 59' 48.61"W N50° 49' 21.23"E S38° 43' 37.22"E S50° 34' 48.69"W
274	9690.64	421.045	128.437 46.000 29.863 99.795 116.950	N86° 57' 08.68"E S14° 17' 29.47"W S56° 52' 38.89"W S52° 34' 11.79"W N6° 19' 32.67"W
275	10338.64	420.576	128.437 116.216 8.406 121.517 46.000	S86° 57' 08.68"W N26° 15' 29.74"E N42° 29' 56.22"E S56° 33' 49.69"E S39° 59' 06.99"W
276	9705.18	401.603	121.517 32.408 81.659 120.019 46.000	N56° 33' 49.69"W N42° 29' 56.22"E N53° 52' 43.67"E S24° 19' 37.62"E S50° 25' 20.96"W
277	10712.82	416.984	120.019 130.291 120.674 46.000	N24° 19' 37.62"W N83° 31' 53.88"E S15° 36' 40.30"W S80° 31' 32.83"W
278	11471.93	447.118	120.674 57.553 87.201 136.846 44.844	N15° 36' 40.30"E S70° 11' 16.93"E S58° 56' 20.05"E S60° 27' 39.15"W N69° 35' 13.11"W

REV.NO.	DESCRIPTIONS	DATE
C	ISSUED FOR PERMITTING	01/21/15
B	PRELIMINARY PLAT PENDER CO. REVIEW	10/10/14
A	75% CONSTRUCTION DOCUMENTS TO TLC FOR REVIEW	08/11/14

REVISIONS

SEAL

PRELIMINARY - DO NOT USE FOR CONSTRUCTION

SEAL

NORTH CAROLINA PROFESSIONAL SEAL 038577 ENGINEER RICHARD A. ... 01-21-15

McKIM&CREED
243 North Front Street
Wilmington, North Carolina 28401
Phone: (910)343-1048, Fax: (910)251-8282
NC LIC. No. F-1222
www.mckimcreed.com

Trask Land CO INC
1202 Eastwood Road
Wilmington, NC 28403
(910) 799-8755

BLAKE FARM – EST 1946 –

BLAKE FARM
TOPSAIL TOWNSHIP
PENDER COUNTY NORTH CAROLINA

PARCEL INFORMATION TABLES

DATE:	9 JANUARY 2015
MCE PROJ. #	6525-0001
DRAWN	CDN
DESIGNED	RAC
CHECKED	RAM
PROJ. MGR.	RAM

SCALE
HORIZONTAL: N/A
VERTICAL: N/A

M&C FILE NUMBER CS109
DRAWING NUMBER 11

STATUS: FINAL PLAN NOT FOR CONSTRUCTION
REVISION C

S:\6525\0001\80-Drawings\CS108-109_065250001.dwg, 1/27/2015 4:28:06 PM, cnursey

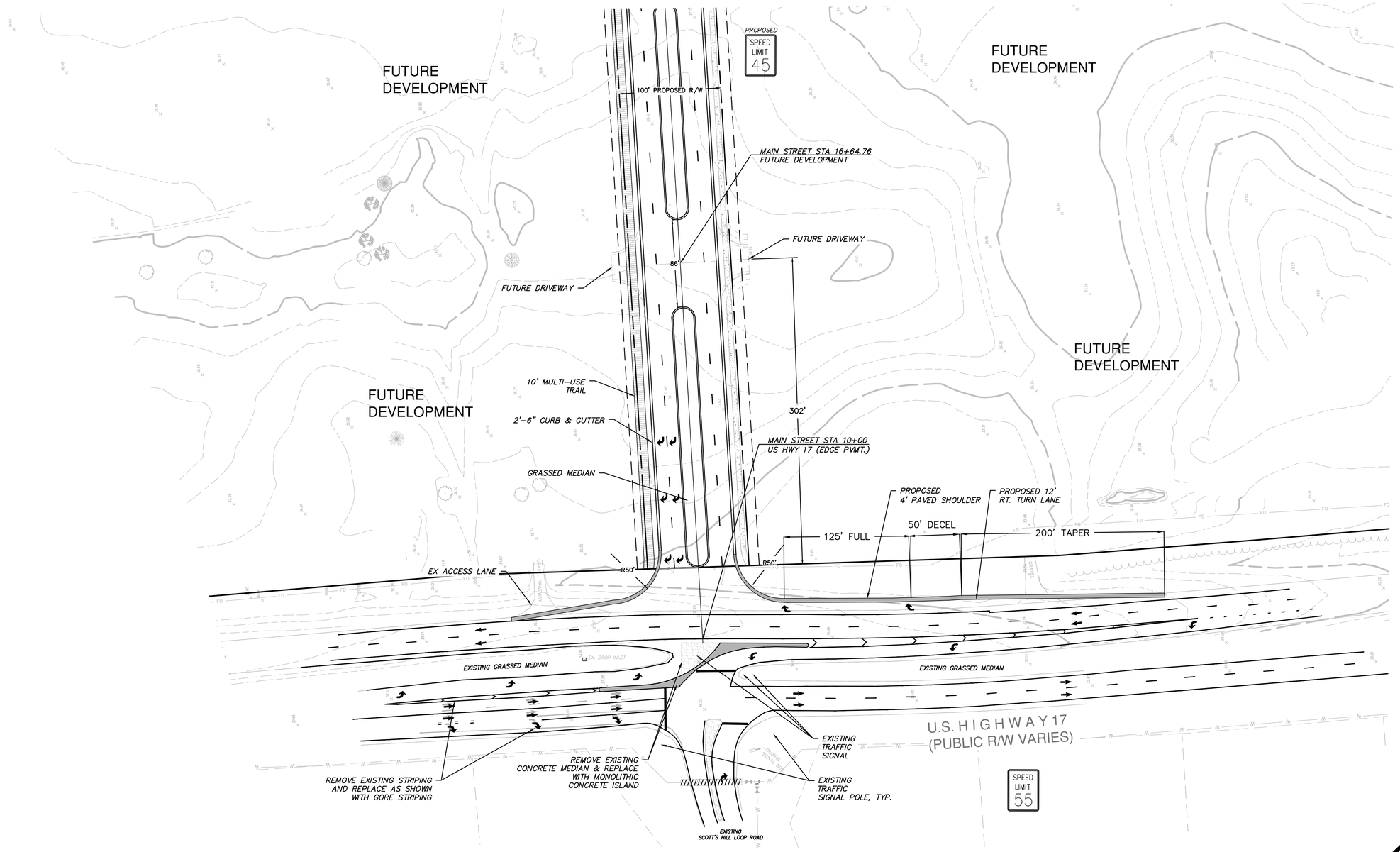

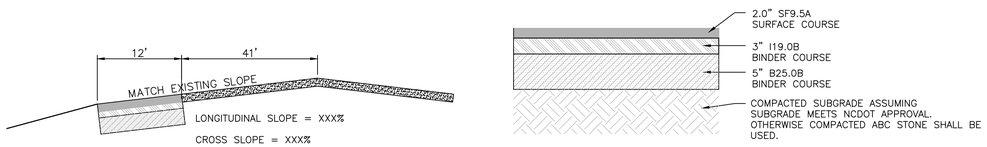

RIGHT TURN LANE ASPHALT PAVEMENT SECTION
(US HWY 17)

REV.NO.	DESCRIPTIONS	DATE
C	ISSUED FOR PERMITTING	01/21/15
B	PRELIMINARY PLAT PENDER CO. REVIEW	10/10/14
A	75% CONSTRUCTION DOCUMENTS TO TLC FOR REVIEW	08/11/14

REVISIONS

PRELIMINARY - DO NOT USE FOR CONSTRUCTION

SEAL

NORTH CAROLINA PROFESSIONAL SEAL 038577 ENGINEER RICHARD A. MCKIMMON 01-21-15

McKIM&CREED
243 North Front Street
Wilmington, North Carolina 28401
Phone: (910)343-1048, Fax: (910)251-8282
NC LIC. No. F-1222
www.mckimcreed.com

Trask Land CO INC
1202 Eastwood Road
Wilmington, NC 28403
(910) 799-8755

BLAKE FARM

BLAKE FARM
TOPSAIL TOWNSHIP
PENDER COUNTY NORTH CAROLINA

US HWY 17
ROADWAY IMPROVEMENTS

DATE:	9 JANUARY 2015
MCE PROJ. #	6525-0001
DRAWN	CDN
DESIGNED	RAC
CHECKED	RAM
PROJ. MGR.	RAM

SCALE
HORIZONTAL: 1"=50'
VERTICAL: N/A

M&C FILE NUMBER CS110
DRAWING NUMBER 12

STATUS: FINAL PLAN NOT FOR CONSTRUCTION
REVISION C

S:\6525\0001\90-Drawings\CS110_06525\0001.dwg, 1/27/2015 4:33:07 PM, cnursey

EROSION CONTROL NOTES:

1. ANY GRADING BEYOND THE DENUDED LIMITS SHOWN ON THE PLAN IS A VIOLATION OF THE COUNTY EROSION CONTROL ORDINANCE AND IS SUBJECT TO A FINE. **LIMITS OF DISTURBANCE 104.90 ACRES.**
2. GRADING MORE THAN ONE ACRE WITHOUT AN APPROVED EROSION CONTROL PLAN IS A VIOLATION OF THE COUNTY EROSION CONTROL ORDINANCE AND IS SUBJECT TO A FINE. ANY BUILDER THAT ANTICIPATES THE DISTURBANCE OF MORE THAN 1 CUMULATIVE ACRE WILL BE REQUIRED TO GET AN EROSION CONTROL PERMIT FROM NCDENR-DLQ.
3. SEE SHEET CE501 FOR GROUND STABILIZATION REQUIREMENTS.
4. SLOPES SHALL BE GRADED NO STEEPER THAN 3:1.
5. ADDITIONAL DEVICES MAY BE REQUIRED AS AGREED UP ON BY FIELD INSPECTOR, ENGINEER, AND OWNER.
6. WITHIN 24 HOURS FOLLOWING ANY RAIN EVENT, THE CONTRACTOR SHALL INSPECT AND REPAIR, AS NECESSARY, ALL DAMAGED EROSION CONTROL MEASURES.

GENERAL GRADING NOTES:

1. GRADING SHOWN OF THE PROPOSED LOTS IS DESIGNED TO PROVIDE 15-18 INCHES OF APPROPRIATE FILL MATERIAL FOR THE HOMESITE BUILDING PAD ABOVE THE ELEVATION OF THE TOP OF CURB AT THE STREET. PROPOSE GRADING SHOULD SHEET FLOW AWAY FROM THE THE BUILDING PAD TO RUNOFF INTO THE ADJACENT STREET OR STORMWATER MANAGEMENT DEVICE.
2. PROPOSED GRADING SHALL BE COMPACTED PER TECHNICAL SPECIFICATION SECTION 02220 "EXCAVATING, GRADING, TRENCHING, & BACKFILLING". PROPOSED GRADING SHALL BE STABILIZED PER APPROVED EROSION AND SEDIMENT CONTROL PERMIT.

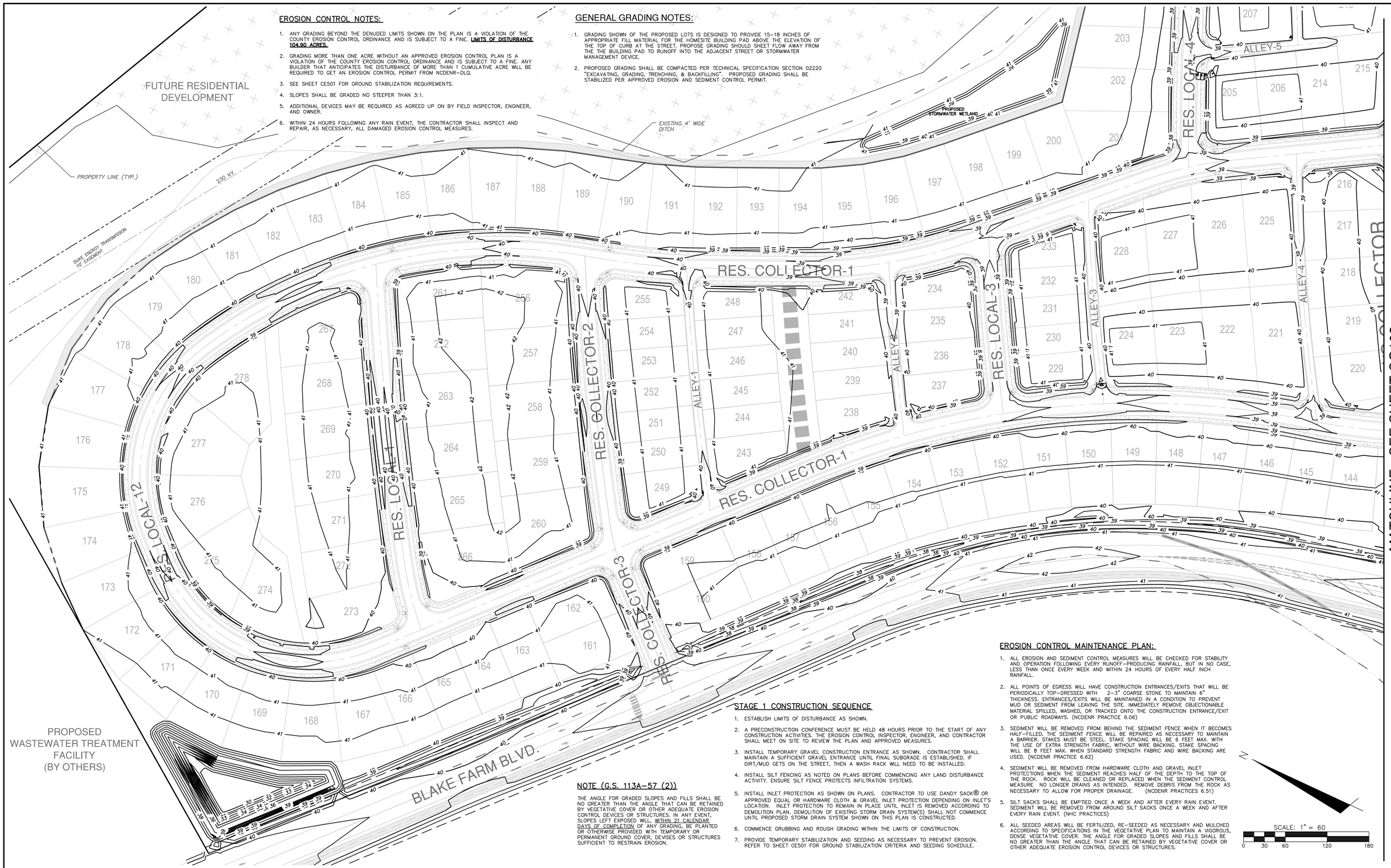

STAGE 1 CONSTRUCTION SEQUENCE

1. ESTABLISH LIMITS OF DISTURBANCE AS SHOWN.
2. A PRECONSTRUCTION CONFERENCE MUST BE HELD 48 HOURS PRIOR TO THE START OF ANY CONSTRUCTION ACTIVITIES. THE EROSION CONTROL INSPECTOR, ENGINEER, AND CONTRACTOR SHALL MEET ON SITE TO REVIEW THE PLAN AND APPROVED MEASURES.
3. INSTALL TEMPORARY GRAVEL CONSTRUCTION ENTRANCE AS SHOWN. CONTRACTOR SHALL MAINTAIN A SUFFICIENT GRAVEL ENTRANCE UNTIL FINAL SUBGRADE IS ESTABLISHED. IF DIRT/MUD GETS ON THE STREET, THEN A WASH RACK WILL NEED TO BE INSTALLED.
4. INSTALL SILT FENCING AS NOTED ON PLANS BEFORE COMMENCING ANY LAND DISTURBANCE ACTIVITY. ENSURE SILT FENCE PROTECTS INFILTRATION SYSTEMS.
5. INSTALL INLET PROTECTION AS SHOWN ON PLANS. CONTRACTOR TO USE DANDY SACK® OR APPROVED EQUAL OR HARDWARE CLOTH & GRAVEL INLET PROTECTION DEPENDING ON INLET'S LOCATION. INLET PROTECTION TO REMAIN IN PLACE UNTIL INLET IS REMOVED ACCORDING TO DEMOLITION PLAN. DEMOLITION OF EXISTING STORM DRAIN SYSTEM(S) SHALL NOT COMMENCE UNTIL PROPOSED STORM DRAIN SYSTEM SHOWN ON THIS PLAN IS CONSTRUCTED.
6. COMMENCE GRUBBING AND ROUGH GRADING WITHIN THE LIMITS OF CONSTRUCTION.
7. PROVIDE TEMPORARY STABILIZATION AND SEEDING AS NECESSARY TO PREVENT EROSION. REFER TO SHEET CE501 FOR GROUND STABILIZATION CRITERIA AND SEEDING SCHEDULE.

NOTE (G.S. 113A-57 (2))

THE ANGLE FOR GRADED SLOPES AND FILLS SHALL BE NO GREATER THAN THE ANGLE THAT CAN BE RETAINED BY VEGETATIVE COVER OR OTHER ADEQUATE EROSION CONTROL DEVICES OR STRUCTURES. IN ANY EVENT, SLOPES LEFT EXPOSED WILL, WITHIN 21 CALENDAR DAYS OF COMPLETION OF ANY GRADING, BE PLANTED OR OTHERWISE PROVIDED WITH TEMPORARY OR PERMANENT GROUND COVER, DEVISES OR STRUCTURES SUFFICIENT TO RESTRAIN EROSION.

EROSION CONTROL MAINTENANCE PLAN:

1. ALL EROSION AND SEDIMENT CONTROL MEASURES WILL BE CHECKED FOR STABILITY AND OPERATION FOLLOWING EVERY RUNOFF-PRODUCING RAINFALL, BUT IN NO CASE, LESS THAN ONCE EVERY WEEK AND WITHIN 24 HOURS OF EVERY HALF INCH RAINFALL.
2. ALL POINTS OF EGRESS WILL HAVE CONSTRUCTION ENTRANCES/EXITS THAT WILL BE PERIODICALLY TOP-DRESSED WITH 2-3" COARSE STONE TO MAINTAIN 6" THICKNESS. ENTRANCES/EXITS WILL BE MAINTAINED IN A CONDITION TO PREVENT MUD OR SEDIMENT FROM LEAVING THE SITE. IMMEDIATELY REMOVE OBJECTIONABLE MATERIAL SPILLED, WASHED, OR TRACKED ONTO THE CONSTRUCTION ENTRANCE/EXIT OR PUBLIC ROADWAYS. (NCDENR PRACTICE 6.06)
3. SEDIMENT WILL BE REMOVED FROM BEHIND THE SEDIMENT FENCE WHEN IT BECOMES HALF-FILLED. THE SEDIMENT FENCE WILL BE REPAIRED AS NECESSARY TO MAINTAIN A BARRIER. STAKES MUST BE STEEL. STAKE SPACING WILL BE 6 FEET MAX. WITH THE USE OF EXTRA STRENGTH FABRIC, WITHOUT WIRE BACKING. STAKE SPACING WILL BE 8 FEET MAX. WHEN STANDARD STRENGTH FABRIC AND WIRE BACKING ARE USED. (NCDENR PRACTICE 6.62)
4. SEDIMENT WILL BE REMOVED FROM HARDWARE CLOTH AND GRAVEL INLET PROTECTIONS WHEN THE SEDIMENT REACHES HALF OF THE DEPTH TO THE TOP OF THE ROCK. ROCK WILL BE CLEANED OR REPLACED WHEN THE SEDIMENT CONTROL MEASURE NO LONGER DRAINS AS INTENDED. REMOVE DEBRIS FROM THE ROCK AS NECESSARY TO ALLOW FOR PROPER DRAINAGE. (NCDENR PRACTICES 6.51)
5. SILT SACKS SHALL BE EMPTIED ONCE A WEEK AND AFTER EVERY RAIN EVENT. SEDIMENT WILL BE REMOVED FROM AROUND SILT SACKS ONCE A WEEK AND AFTER EVERY RAIN EVENT. (NHC PRACTICES)
6. ALL SEEDED AREAS WILL BE FERTILIZED, RE-SEEDED AS NECESSARY AND MULCHED ACCORDING TO SPECIFICATIONS IN THE VEGETATIVE PLAN TO MAINTAIN A VIGOROUS, DENSE VEGETATIVE COVER. THE ANGLE FOR GRADED SLOPES AND FILLS SHALL BE NO GREATER THAN THE ANGLE THAT CAN BE RETAINED BY VEGETATIVE COVER OR OTHER ADEQUATE EROSION CONTROL DEVICES OR STRUCTURES.

N

SCALE: 1" = 60

0 30 60 120 180

REV.NO.	DESCRIPTIONS	DATE
C	ISSUED FOR PERMITTING	01/21/15
B	PRELIMINARY PLAT PENDER CO. REVIEW	10/10/14
A	75% CONSTRUCTION DOCUMENTS TO TLC FOR REVIEW	08/11/14

REVISIONS

PRELIMINARY - DO NOT USE FOR CONSTRUCTION

SEAL

NORTH CAROLINA PROFESSIONAL SEAL 038577 ENGINEER RICHARD A. MEIER

01-21-15

MCKIM&CREED
243 North Front Street
Wilmington, North Carolina 28401
Phone: (910)343-1048, Fax: (910)251-8282
NC LIC. No. F-1222
www.mckimcreed.com

Trask Land CO INC
1202 Eastwood Road
Wilmington, NC 28403
(910) 799-8755

BLAKE FARM - EST. 1946

BLAKE FARM

TOPSAIL TOWNSHIP
PENDER COUNTY NORTH CAROLINA

ENLARGED GRADING PLAN

DATE:	9 JANUARY 2015
MCE PROJ. #	6525-0001
DRAWN	CDN
DESIGNED	RAC
CHECKED	RAM
PROJ. MGR.	RAM

SCALE
HORIZONTAL: 1"=60'
VERTICAL: N/A

M&C FILE NUMBER CG101
DRAWING NUMBER 13

STATUS: FINAL PLAN NOT FOR CONSTRUCTION
REVISION C

S:\6525\0001\9B-Drawings\CG101-103_06525000.1.dwg, 1/27/2015 4:35:20 PM, courtney

MATCHLINE - SEE SHEET CG103

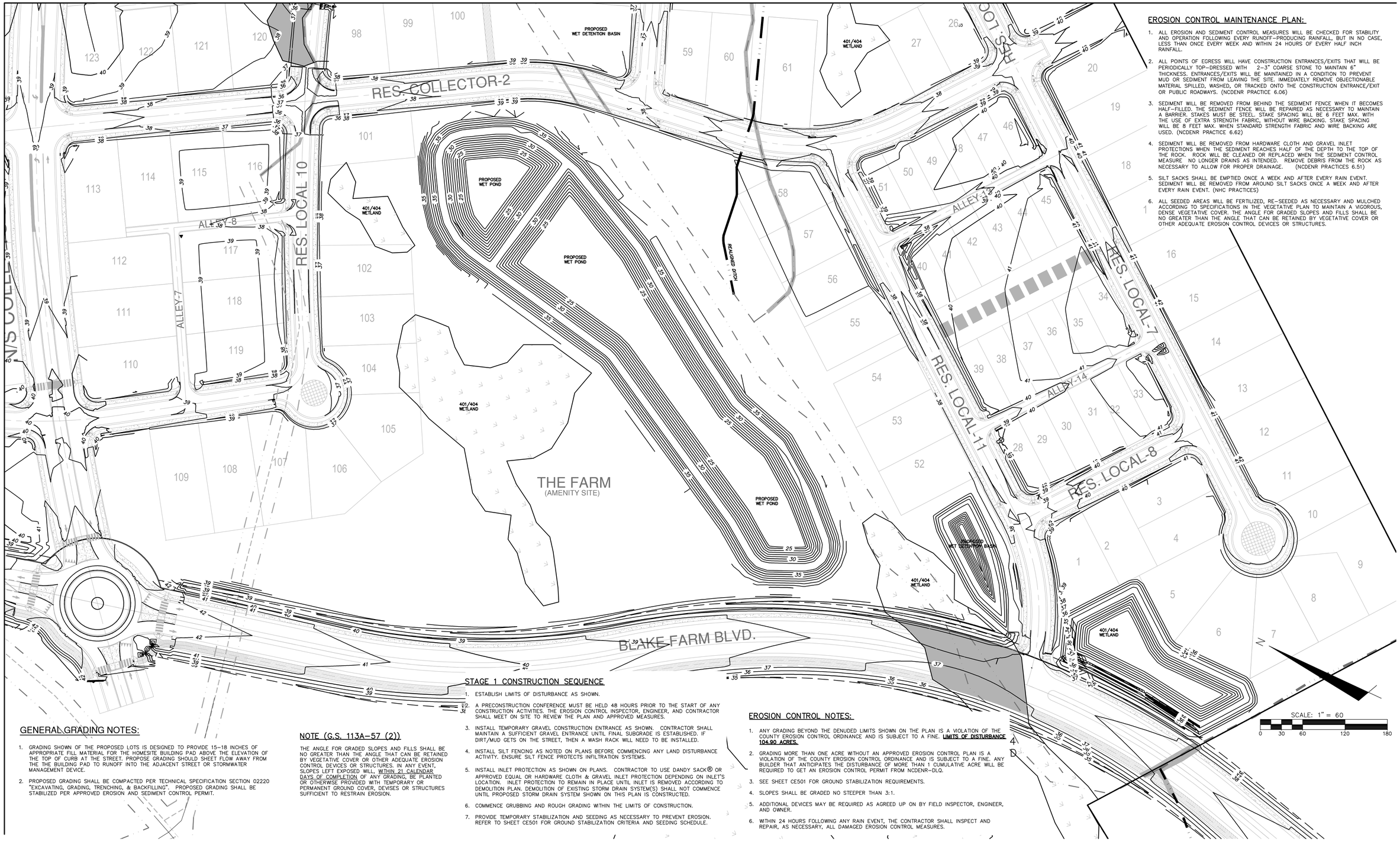

MATCHLINE - SEE SHEET CG101

EROSION CONTROL MAINTENANCE PLAN:

1. ALL EROSION AND SEDIMENT CONTROL MEASURES WILL BE CHECKED FOR STABILITY AND OPERATION FOLLOWING EVERY RUNOFF-PRODUCING RAINFALL, BUT IN NO CASE, LESS THAN ONCE EVERY WEEK AND WITHIN 24 HOURS OF EVERY HALF INCH RAINFALL.
2. ALL POINTS OF EGRESS WILL HAVE CONSTRUCTION ENTRANCES/EXITS THAT WILL BE PERIODICALLY TOP-DRESSED WITH 2-3" COARSE STONE TO MAINTAIN 6" THICKNESS. ENTRANCES/EXITS WILL BE MAINTAINED IN A CONDITION TO PREVENT MUD OR SEDIMENT FROM LEAVING THE SITE. IMMEDIATELY REMOVE OBJECTIONABLE MATERIAL SPILLED, WASHED, OR TRACKED ONTO THE CONSTRUCTION ENTRANCE/EXIT OR PUBLIC ROADWAYS. (NCDENR PRACTICE 6.06)
3. SEDIMENT WILL BE REMOVED FROM BEHIND THE SEDIMENT FENCE WHEN IT BECOMES HALF-FILLED. THE SEDIMENT FENCE WILL BE REPAIRED AS NECESSARY TO MAINTAIN A BARRIER. STAKES MUST BE STEEL. STAKE SPACING WILL BE 6 FEET MAX. WITH THE USE OF EXTRA STRENGTH FABRIC, WITHOUT WIRE BACKING. STAKE SPACING WILL BE 8 FEET MAX. WHEN STANDARD STRENGTH FABRIC AND WIRE BACKING ARE USED. (NCDENR PRACTICE 6.62)
4. SEDIMENT WILL BE REMOVED FROM HARDWARE CLOTH AND GRAVEL INLET PROTECTIONS WHEN THE SEDIMENT REACHES HALF OF THE DEPTH TO THE TOP OF THE ROCK. ROCK WILL BE CLEANED OR REPLACED WHEN THE SEDIMENT CONTROL MEASURE NO LONGER DRAINS AS INTENDED. REMOVE DEBRIS FROM THE ROCK AS NECESSARY TO ALLOW FOR PROPER DRAINAGE. (NCDENR PRACTICES 6.51)
5. SILT SACKS SHALL BE EMPTIED ONCE A WEEK AND AFTER EVERY RAIN EVENT. SEDIMENT WILL BE REMOVED FROM AROUND SILT SACKS ONCE A WEEK AND AFTER EVERY RAIN EVENT. (NHC PRACTICES)
6. ALL SEEDED AREAS WILL BE FERTILIZED, RE-SEEDED AS NECESSARY AND MULCHED ACCORDING TO SPECIFICATIONS IN THE VEGETATIVE PLAN TO MAINTAIN A VIGOROUS, DENSE VEGETATIVE COVER. THE ANGLE FOR GRADED SLOPES AND FILLS SHALL BE NO GREATER THAN THE ANGLE THAT CAN BE RETAINED BY VEGETATIVE COVER OR OTHER ADEQUATE EROSION CONTROL DEVICES OR STRUCTURES.

GENERAL GRADING NOTES:

1. GRADING SHOWN OF THE PROPOSED LOTS IS DESIGNED TO PROVIDE 15-18 INCHES OF APPROPRIATE FILL MATERIAL FOR THE HOMESITE BUILDING PAD ABOVE THE ELEVATION OF THE TOP OF CURB AT THE STREET. PROPOSE GRADING SHOULD SHEET FLOW AWAY FROM THE THE BUILDING PAD TO RUNOFF INTO THE ADJACENT STREET OR STORMWATER MANAGEMENT DEVICE.
2. PROPOSED GRADING SHALL BE COMPACTED PER TECHNICAL SPECIFICATION SECTION 02220 "EXCAVATING, GRADING, TRENCHING, & BACKFILLING". PROPOSED GRADING SHALL BE STABILIZED PER APPROVED EROSION AND SEDIMENT CONTROL PERMIT.

NOTE (G.S. 113A-57 (2))

THE ANGLE FOR GRADED SLOPES AND FILLS SHALL BE NO GREATER THAN THE ANGLE THAT CAN BE RETAINED BY VEGETATIVE COVER OR OTHER ADEQUATE EROSION CONTROL DEVICES OR STRUCTURES. IN ANY EVENT, SLOPES LEFT EXPOSED WILL, WITHIN 21 CALENDAR DAYS OF COMPLETION OF ANY GRADING, BE PLANTED OR OTHERWISE PROVIDED WITH TEMPORARY OR PERMANENT GROUND COVER, DEVISES OR STRUCTURES SUFFICIENT TO RESTRAIN EROSION.

STAGE 1 CONSTRUCTION SEQUENCE

1. ESTABLISH LIMITS OF DISTURBANCE AS SHOWN.
2. A PRECONSTRUCTION CONFERENCE MUST BE HELD 48 HOURS PRIOR TO THE START OF ANY CONSTRUCTION ACTIVITIES. THE EROSION CONTROL INSPECTOR, ENGINEER, AND CONTRACTOR SHALL MEET ON SITE TO REVIEW THE PLAN AND APPROVED MEASURES.
3. INSTALL TEMPORARY GRAVEL CONSTRUCTION ENTRANCE AS SHOWN. CONTRACTOR SHALL MAINTAIN A SUFFICIENT GRAVEL ENTRANCE UNTIL FINAL SUBGRADE IS ESTABLISHED. IF DIRT/MUD GETS ON THE STREET, THEN A WASH RACK WILL NEED TO BE INSTALLED.
4. INSTALL SILT FENCING AS NOTED ON PLANS BEFORE COMMENCING ANY LAND DISTURBANCE ACTIVITY. ENSURE SILT FENCE PROTECTS INFILTRATION SYSTEMS.
5. INSTALL INLET PROTECTION AS SHOWN ON PLANS. CONTRACTOR TO USE DANDY SACK® OR APPROVED EQUAL OR HARDWARE CLOTH & GRAVEL INLET PROTECTION DEPENDING ON INLET'S LOCATION. INLET PROTECTION TO REMAIN IN PLACE UNTIL INLET IS REMOVED ACCORDING TO DEMOLITION PLAN. DEMOLITION OF EXISTING STORM DRAIN SYSTEM(S) SHALL NOT COMMENCE UNTIL PROPOSED STORM DRAIN SYSTEM SHOWN ON THIS PLAN IS CONSTRUCTED.
6. COMMENCE GRUBBING AND ROUGH GRADING WITHIN THE LIMITS OF CONSTRUCTION.
7. PROVIDE TEMPORARY STABILIZATION AND SEEDING AS NECESSARY TO PREVENT EROSION. REFER TO SHEET CE501 FOR GROUND STABILIZATION CRITERIA AND SEEDING SCHEDULE.

EROSION CONTROL NOTES:

1. ANY GRADING BEYOND THE DENUDED LIMITS SHOWN ON THE PLAN IS A VIOLATION OF THE COUNTY EROSION CONTROL ORDINANCE AND IS SUBJECT TO A FINE. LIMITS OF DISTURBANCE 104.90 ACRES.
2. GRADING MORE THAN ONE ACRE WITHOUT AN APPROVED EROSION CONTROL PLAN IS A VIOLATION OF THE COUNTY EROSION CONTROL ORDINANCE AND IS SUBJECT TO A FINE. ANY BUILDER THAT ANTICIPATES THE DISTURBANCE OF MORE THAN 1 CUMULATIVE ACRE WILL BE REQUIRED TO GET AN EROSION CONTROL PERMIT FROM NCDENR-DLQ.
3. SEE SHEET CE501 FOR GROUND STABILIZATION REQUIREMENTS.
4. SLOPES SHALL BE GRADED NO STEEPER THAN 3:1.
5. ADDITIONAL DEVICES MAY BE REQUIRED AS AGREED UP ON BY FIELD INSPECTOR, ENGINEER, AND OWNER.
6. WITHIN 24 HOURS FOLLOWING ANY RAIN EVENT, THE CONTRACTOR SHALL INSPECT AND REPAIR, AS NECESSARY, ALL DAMAGED EROSION CONTROL MEASURES.

REV.NO	DESCRIPTIONS	DATE
C	ISSUED FOR PERMITTING	01/21/15
B	PRELIMINARY PLAT PENDER CO. REVIEW	10/10/14
A	75% CONSTRUCTION DOCUMENTS TO TLC FOR REVIEW	08/11/14

REVISIONS

PRELIMINARY - DO NOT USE FOR CONSTRUCTION

SEAL

NORTH CAROLINA PROFESSIONAL SEAL 038577 ENGINEER RICHARD A. CARLSEN

01-21-15

McKIM&CREED
243 North Front Street
Wilmington, North Carolina 28401
Phone: (910)343-1048, Fax: (910)251-8282

NC LIC. No. F-1222
www.mckimcreed.com

Trask Land CO INC
1202 Eastwood Road
Wilmington, NC 28403
(910) 799-8755

BLAKE FARM EST. 1946

BLAKE FARM

TOPSAIL TOWNSHIP
PENDER COUNTY NORTH CAROLINA

ENLARGED GRADING PLAN

DATE:	9 JANUARY 2015
MCE PROJ. #	6525-0001
DRAWN	CDN
DESIGNED	RAC
CHECKED	RAM
PROJ. MGR.	RAM

SCALE
HORIZONTAL: 1"=60'
VERTICAL: N/A

M&C FILE NUMBER: CG102
DRAWING NUMBER: 14

STATUS: FINAL PLAN NOT FOR CONSTRUCTION
REVISION: C

S:\6525\0001\98-Drawings\CG103-103_06525001.dwg, 1/27/2015 4:36:28 PM, cmurney

EROSION CONTROL NOTES:

1. ANY GRADING BEYOND THE DENUDED LIMITS SHOWN ON THE PLAN IS A VIOLATION OF THE COUNTY EROSION CONTROL ORDINANCE AND IS SUBJECT TO A FINE. **LIMITS OF DISTURBANCE 104.90 ACRES.**
2. GRADING MORE THAN ONE ACRE WITHOUT AN APPROVED EROSION CONTROL PLAN IS A VIOLATION OF THE COUNTY EROSION CONTROL ORDINANCE AND IS SUBJECT TO A FINE. ANY BUILDER THAT ANTICIPATES THE DISTURBANCE OF MORE THAN 1 CUMULATIVE ACRE WILL BE REQUIRED TO GET AN EROSION CONTROL PERMIT FROM NCDENR–DLQ.
3. SEE SHEET CE501 FOR GROUND STABILIZATION REQUIREMENTS.
4. SLOPES SHALL BE GRADED NO STEEPER THAN 3:1.
5. ADDITIONAL DEVICES MAY BE REQUIRED AS AGREED UP ON BY FIELD INSPECTOR, ENGINEER, AND OWNER.
6. WITHIN 24 HOURS FOLLOWING ANY RAIN EVENT, THE CONTRACTOR SHALL INSPECT AND REPAIR, AS NECESSARY, ALL DAMAGED EROSION CONTROL MEASURES.

STAGE 1 CONSTRUCTION SEQUENCE

1. ESTABLISH LIMITS OF DISTURBANCE AS SHOWN.
2. A PRECONSTRUCTION CONFERENCE MUST BE HELD 48 HOURS PRIOR TO THE START OF ANY CONSTRUCTION ACTIVITIES. THE EROSION CONTROL INSPECTOR, ENGINEER, AND CONTRACTOR SHALL MEET ON SITE TO REVIEW THE PLAN AND APPROVED MEASURES.
3. INSTALL TEMPORARY GRAVEL CONSTRUCTION ENTRANCE AS SHOWN. CONTRACTOR SHALL MAINTAIN A SUFFICIENT GRAVEL ENTRANCE UNTIL FINAL SUBGRADE IS ESTABLISHED. IF DIRT/MUD GETS ON THE STREET, THEN A WASH RACK WILL NEED TO BE INSTALLED.
4. INSTALL SILT FENCING AS NOTED ON PLANS BEFORE COMMENCING ANY LAND DISTURBANCE ACTIVITY. ENSURE SILT FENCE PROTECTS INFILTRATION SYSTEMS.
5. INSTALL INLET PROTECTION AS SHOWN ON PLANS. CONTRACTOR TO USE DANDY SACK® OR APPROVED EQUAL OR HARDWARE CLOTH & GRAVEL INLET PROTECTION DEPENDING ON INLET'S LOCATION. INLET PROTECTION TO REMAIN IN PLACE UNTIL INLET IS REMOVED ACCORDING TO DEMOLITION PLAN. DEMOLITION OF EXISTING STORM DRAIN SYSTEM(S) SHALL NOT COMMENCE UNTIL PROPOSED STORM DRAIN SYSTEM SHOWN ON THIS PLAN IS CONSTRUCTED.
6. COMMENCE GRUBBING AND ROUGH GRADING WITHIN THE LIMITS OF CONSTRUCTION.
7. PROVIDE TEMPORARY STABILIZATION AND SEEDING AS NECESSARY TO PREVENT EROSION. REFER TO SHEET CE501 FOR GROUND STABILIZATION CRITERIA AND SEEDING SCHEDULE.

NOTE (G.S. 113A–57 (2))

THE ANGLE FOR GRADED SLOPES AND FILLS SHALL BE NO GREATER THAN THE ANGLE THAT CAN BE RETAINED BY VEGETATIVE COVER OR OTHER ADEQUATE EROSION CONTROL DEVICES OR STRUCTURES. IN ANY EVENT, SLOPES LEFT EXPOSED WILL, WITHIN 21 CALENDAR DAYS OF COMPLETION OF ANY GRADING, BE PLANTED OR OTHERWISE PROVIDED WITH TEMPORARY OR PERMANENT GROUND COVER, DEVISES OR STRUCTURES SUFFICIENT TO RESTRAIN EROSION.

GENERAL GRADING NOTES:

1. GRADING SHOWN OF THE PROPOSED LOTS IS DESIGNED TO PROVIDE 15–18 INCHES OF APPROPRIATE FILL MATERIAL FOR THE HOMESITE BUILDING PAD ABOVE THE ELEVATION OF THE TOP OF CURB AT THE STREET. PROPOSE GRADING SHOULD SHEET FLOW AWAY FROM THE THE BUILDING PAD TO RUNOFF INTO THE ADJACENT STREET OR STORMWATER MANAGEMENT DEVICE.
2. PROPOSED GRADING SHALL BE COMPACTED PER TECHNICAL SPECIFICATION SECTION 02220 "EXCAVATING, GRADING, TRENCHING, & BACKFILLING". PROPOSED GRADING SHALL BE STABILIZED PER APPROVED EROSION AND SEDIMENT CONTROL PERMIT.

EROSION CONTROL MAINTENANCE PLAN:

1. ALL EROSION AND SEDIMENT CONTROL MEASURES WILL BE CHECKED FOR STABILITY AND OPERATION FOLLOWING EVERY RUNOFF–PRODUCING RAINFALL BUT IN NO CASE, LESS THAN ONCE EVERY WEEK AND WITHIN 24 HOURS OF EVERY HALF INCH RAINFALL.
2. ALL POINTS OF EGRESS WILL HAVE CONSTRUCTION ENTRANCES/EXITS THAT WILL BE PERIODICALLY TOP–DRESSED WITH 2–3" COARSE STONE TO MAINTAIN 6" THICKNESS. ENTRANCES/EXITS WILL BE MAINTAINED IN A CONDITION TO PREVENT MUD OR SEDIMENT FROM LEAVING THE SITE. IMMEDIATELY REMOVE OBJECTIONABLE MATERIAL SPILLED, WASHED, OR TRACKED ONTO THE CONSTRUCTION ENTRANCE/EXIT OR PUBLIC ROADWAYS. (NCDENR PRACTICE 6.06)
3. SEDIMENT WILL BE REMOVED FROM BEHIND THE SEDIMENT FENCE WHEN IT BECOMES HALF–FILLED. THE SEDIMENT FENCE WILL BE REPAIRED AS NECESSARY TO MAINTAIN A BARRIER. STAKES MUST BE STEEL. STAKE SPACING WILL BE 6 FEET MAX. WITH THE USE OF EXTRA STRENGTH FABRIC, WITHOUT WIRE BACKING. STAKE SPACING WILL BE 8 FEET MAX. WHEN STANDARD STRENGTH FABRIC AND WIRE BACKING ARE USED. (NCDENR PRACTICE 6.62)
4. SEDIMENT WILL BE REMOVED FROM HARDWARE CLOTH AND GRAVEL INLET PROTECTIONS WHEN THE SEDIMENT REACHES HALF OF THE DEPTH TO THE TOP OF THE ROCK. ROCK WILL BE CLEANED OR REPLACED WHEN THE SEDIMENT CONTROL MEASURE NO LONGER DRAINS AS INTENDED. REMOVE DEBRIS FROM THE ROCK AS NECESSARY TO ALLOW FOR PROPER DRAINAGE. (NCDENR PRACTICES 6.51)
5. SILT SACKS SHALL BE EMPTIED ONCE A WEEK AND AFTER EVERY RAIN EVENT. SEDIMENT WILL BE REMOVED FROM AROUND SILT SACKS ONCE A WEEK AND AFTER EVERY RAIN EVENT. (NHC PRACTICES)
6. ALL SEEDED AREAS WILL BE FERTILIZED, RE–SEEDED AS NECESSARY AND MULCHED ACCORDING TO SPECIFICATIONS IN THE VEGETATIVE PLAN TO MAINTAIN A VIGOROUS, DENSE VEGETATIVE COVER. THE ANGLE FOR GRADED SLOPES AND FILLS SHALL BE NO GREATER THAN THE ANGLE THAT CAN BE RETAINED BY VEGETATIVE COVER OR OTHER ADEQUATE EROSION CONTROL DEVICES OR STRUCTURES.

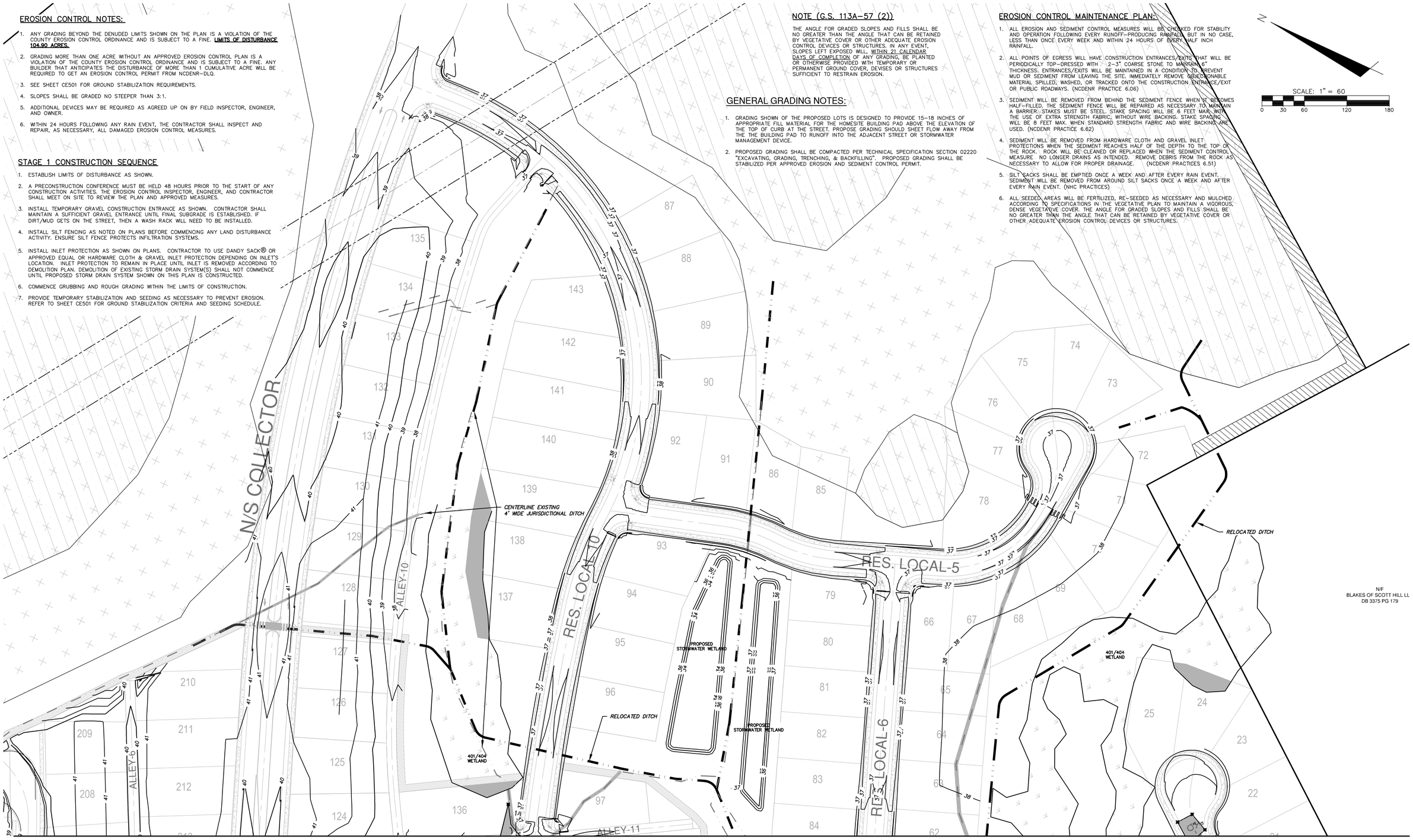

MATCHLINE - SEE SHEET CG102

REV.NO.	DESCRIPTIONS	DATE
C	ISSUED FOR PERMITTING	01/21/15
B	PRELIMINARY FLAT PENDER CO. REVIEW	10/10/14
A	75% CONSTRUCTION DOCUMENTS TO TLC FOR REVIEW	08/11/14

REVISIONS

SEAL

PRELIMINARY- DO NOT USE FOR CONSTRUCTION

SEAL

NORTH CAROLINA PROFESSIONAL SEAL 038577 ENGINEER RICHARD A. MCCLAMB

01-21-15

McKIM&CREED
243 North Front Street
Wilmington, North Carolina 28401
Phone: (910)343-1048, Fax: (910)251-8282

NC LIC. No. F-1222
www.mckimcreed.com

Trask Land CO INC
1202 Eastwood Road
Wilmington, NC 28403
(910) 799-8755

BLAKE FARM

BLAKE FARM

TOPSAIL TOWNSHIP
PENDER COUNTY NORTH CAROLINA

ENLARGED GRADING PLAN

DATE:	9 JANUARY 2015
MCE PROJ. #	6525-0001
DRAWN	CDN
DESIGNED	RAC
CHECKED	RAM
PROJ. MGR.	RAM

SCALE
HORIZONTAL: 1"=60'
VERTICAL: N/A

M&C FILE NUMBER CG103
DRAWING NUMBER 15

STATUS: FINAL PLAN
NOT FOR CONSTRUCTION
REVISION C

S:\6525\0001\80-Drawings\CG101-103_06525000I1.dwg, 1/27/2015 4:37:47 PM, cmurray

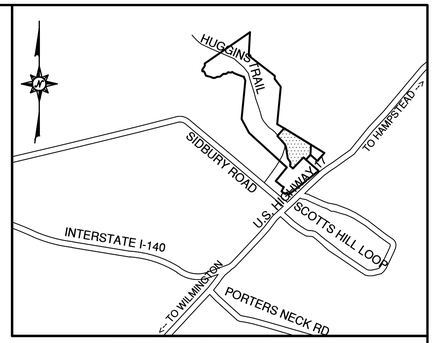

VICINITY MAP - NOT TO SCALE

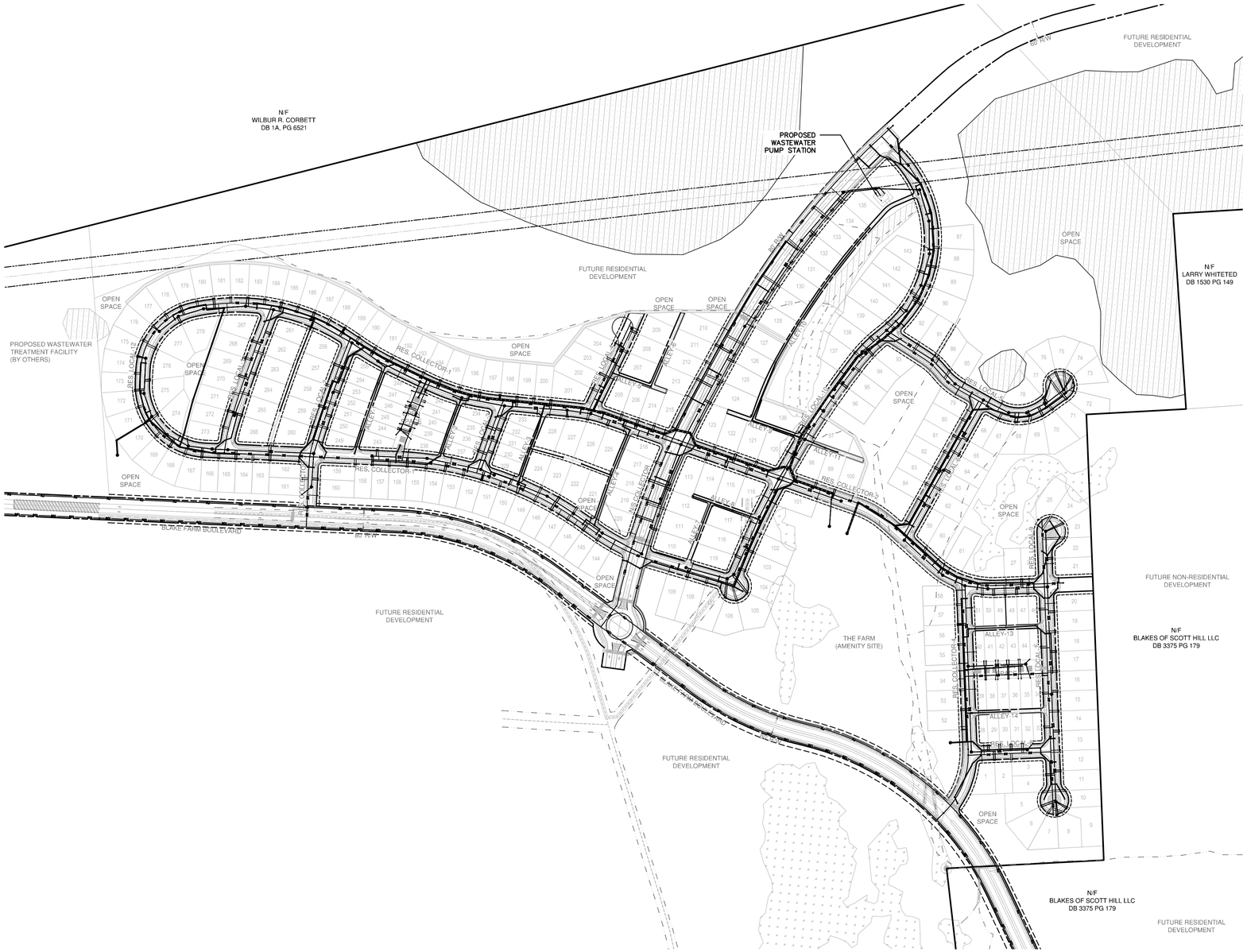

NOTES:

1. CONTRACTOR TO VERIFY SIZE, DEPTH, MATERIAL AND LOCATION FOR ALL UNDERGROUND UTILITIES PRIOR TO THE START OF CONSTRUCTION.
2. THE UNDERGROUND UTILITIES INDICATED ON THE PLANS HAVE BEEN TAKEN FROM INFORMATION MADE AVAILABLE FROM THE VARIOUS UTILITY OWNERS. THIS INFORMATION IS NOT INCLUSIVE OF ALL EXISTING UNDERGROUND UTILITIES AND CABLES. THE CONTRACTOR IS ADVISED THAT ADDITIONAL UNDERGROUND UTILITIES AND CABLES MAY EXISTING WHICH ARE NOT SHOWN ON THE PLANS. PLEASE BE ADVISED THAT THE UNDERGROUND UTILITIES AND CABLES COULD CONFLICT WITH THE WATER AND FORCEMAIN CONSTRUCTION AS SHOWN.
3. CLEARING LIMITS HAVE NOT BEEN SHOWN ON THE PLANS.
4. CONTRACTOR SHALL BRACE / SUPPORT ALL POWER POLES AS REQUIRED FOR CONSTRUCTION.
5. PRECAST CONCRETE MANHOLES SHALL MEET OR EXCEED THE REQUIREMENTS OF ASTM C 478. ALL SURFACES SHALL BE SMOOTH AND EVEN TEXTURED WITH A MINIMUM OF HONEYCOMB, FIN, AND OTHER IMPERFECTIONS.
6. JOINTS BETWEEN MANHOLE SECTIONS SHALL BE SEALED WATERTIGHT USING EITHER O-RING GASKETS CONFORMING WITH ASTM C 443 OR BUTYL RESIN CONFORMING WITH AASHTO M-198.
7. EXTERIOR JOINTS SHALL BE SEALED WITH A 4" WIDE BUTYL RUBBER WRAP.
8. ADD INTERIOR HIGH SOLIDS EPOXY PROTECTION COATING FOR ALL MANHOLES RECEIVING DISCHARGE FROM FORCE MAINS (MIN. 20 MILS).
9. HOLES FOR CONNECTION OF PIPE TO MANHOLE SHALL BE PRECAST OR CORED. DIAMETER OF HOLE SHALL NOT EXCEED OUTSIDE DIAMETER OR PIPE BY MORE THAN 3 INCHES.
10. CONNECTIONS OF PIPE TO MANHOLE SHALL BE MADE WATERTIGHT USING RESILIENT CONNECTORS CONFORMING TO ASTM C 923 OR NEOPRENE BOOTS EMBEDDED IN PRECAST BASE WITH STAINLESS STEEL COMPRESSION BANDS.
11. MANHOLE INVERTS SHALL BE INSTALLED USING BRICK AND MORTAR, OR MANHOLES MAY BE PRECAST, MONOLITHIC SECTIONS WITH FORMED INVERTS.
12. LIFT HOLES SHALL BE PLUGGED AND FILLED FLUSH WITH MORTAR.
13. ALL BRICK AND MORTAR SHALL RECEIVE A 1/2" MORTAR PARGE COAT ON INSIDE AND OUTSIDE.
14. ALL SPACE BETWEEN PIPE AND OPENING INSIDE OF MANHOLE TO BE GROUTED WITH TYPE S MORTAR
15. SEWER MAIN PENETRATIONS AND/OR SERVICE LATERAL PENETRATIONS ENTERING AT 30" OR LESS ABOVE THE MANHOLE BENCH SHALL HAVE A SLIDE CONSTRUCTED OF BRICK AND MORTAR.(SEE DETAIL)
16. ALL PENETRATIONS ENTERING MANHOLE AT GREATER THAN 30" SHALL BE AN INSIDE DROP MANHOLE (SEE DETAIL).
17. INSIDE DROP MANHOLES, AND PUMP STATION RECEIVING MANHOLES SHALL BE MINIMUM 5' DIAMETER MANHOLES.
18. SANITARY SEWER MANHOLES SHALL BE COATED WITH COAL TAR EPOXY 20 MILS THROUGHOUT THE INSIDE OF THE MANHOLE.
19. ALL MANHOLES SHALL HAVE A SEWER GUARD INSERT INSTALLED – PLASTIC IS ALLOWED IN NON-TRAFFIC AREAS – STAINLESS STEEL INSERT PANS ARE REQUIRED IN TRAFFIC AREAS
20. MANHOLES SHALL BE TRAFFIC BEARING WITH A MINIMUM HS-20 LOAD ALLOWANCE.

SCALE: 1" = 200'

0 100 200 400 600

REV.NO.	DESCRIPTIONS	DATE
C	ISSUED FOR PERMITTING	01/25/15
B	PRELIMINARY PLAT PENDER CO. REVIEW	10/10/14
A	75% CONSTRUCTION DOCUMENTS TO TLC FOR REVIEW	08/11/14

REVISIONS

PRELIMINARY- DO NOT USE FOR CONSTRUCTION

SEAL

SEAL 038577 ENGINEER RICHARD A. MASSEN

01-21-15

McKIM&CREED
243 North Front Street
Wilmington, North Carolina 28401
Phone: (910)343-1048, Fax: (910)251-8282

NC LIC. No. F-1222
www.mckimcreed.com

Trask Land CO INC
1202 Eastwood Road
Wilmington, NC 28403
(910) 799-8755

BLAKE FARM

BLAKE FARM

TOPSAIL TOWNSHIP
PENDER COUNTY NORTH CAROLINA

OVERALL UTILITY PLAN

DATE:	9 JANUARY 2015
MCE PROJ. #	6525-0001
DRAWN	CDN
DESIGNED	RAC
CHECKED	RAM
PROJ. MGR.	RAM

SCALE
HORIZONTAL: 1"=200'
VERTICAL: N/A

M&C FILE NUMBER CU101
DRAWING NUMBER 16

STATUS: FINAL PLAN
NOT FOR CONSTRUCTION
REVISION C

S:\6525\0001\80-Drawings\CU101_06525001.dwg, 1/27/2015 4:41:43 PM, cnursey

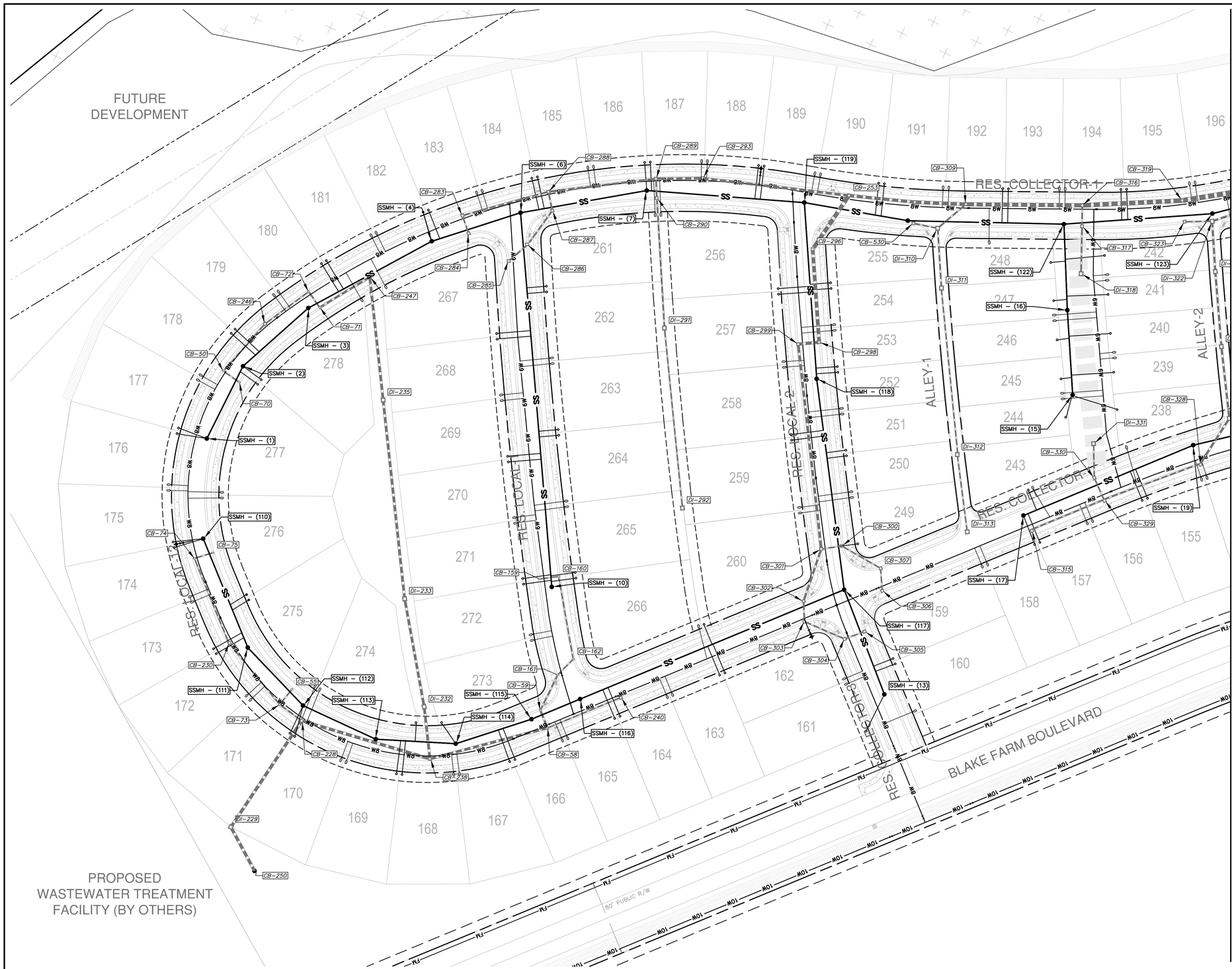

MATCHLINE - SEE SHEET CU103

NOTES:

1. CONTRACTOR TO VERIFY SIZE, DEPTH, MATERIAL AND LOCATION FOR ALL UNDERGROUND UTILITIES PRIOR TO THE START OF CONSTRUCTION.
2. THE UNDERGROUND UTILITIES INDICATED ON THE PLANS HAVE BEEN TAKEN FROM INFORMATION MADE AVAILABLE FROM THE VARIOUS UTILITY OWNERS. THIS INFORMATION IS NOT INCLUSIVE OF ALL EXISTING UNDERGROUND UTILITIES AND CABLES. THE CONTRACTOR IS ADVISED THAT ADDITIONAL UNDERGROUND UTILITIES AND CABLES MAY EXISTING WHICH ARE NOT SHOWN ON THE PLANS. PLEASE BE ADVISED THAT THE UNDERGROUND UTILITIES AND CABLES COULD CONFLICT WITH THE WATER AND FORCEMAIN CONSTRUCTION AS SHOWN.
3. CLEARING LIMITS HAVE NOT BEEN SHOWN ON THE PLANS.
4. CONTRACTOR SHALL BRACE / SUPPORT ALL POWER POLES AS REQUIRED FOR CONSTRUCTION.
5. PRECAST CONCRETE MANHOLES SHALL MEET OR EXCEED THE REQUIREMENTS OF ASTM C 478. ALL SURFACES SHALL BE SMOOTH AND EVEN TEXTURED WITH A MINIMUM OF HONEYCOMB, FIN, AND OTHER IMPERFECTIONS.
6. JOINTS BETWEEN MANHOLE SECTIONS SHALL BE SEALED WATERTIGHT USING EITHER O-RING GASKETS CONFORMING WITH ASTM C 443 OR BUTYL RESIN CONFORMING WITH AASHTO M-198.
7. EXTERIOR JOINTS SHALL BE SEALED WITH A 4" WIDE BUTYL RUBBER WRAP.
8. ADD INTERIOR HIGH SOLIDS EPOXY PROTECTION COATING FOR ALL MANHOLES RECEIVING DISCHARGE FROM FORCE MAINS (MIN. 20 MILS).
9. HOLES FOR CONNECTION OF PIPE TO MANHOLE SHALL BE PRECAST OR CORED. DIAMETER OF HOLE SHALL NOT EXCEED OUTSIDE DIAMETER OR PIPE BY MORE THAN 3 INCHES.
10. CONNECTIONS OF PIPE TO MANHOLE SHALL BE MADE WATERTIGHT USING RESILIENT CONNECTORS CONFORMING TO ASTM C 923 OR NEOPRENE BOOTS EMBEDDED IN PRECAST BASE WITH STAINLESS STEEL COMPRESSION BANDS.
11. MANHOLE INVERTS SHALL BE INSTALLED USING BRICK AND MORTAR, OR MANHOLES MAY BE PRECAST, MONOLITHIC SECTIONS WITH FORMED INVERTS.
12. LIFT HOLES SHALL BE PLUGGED AND FILLED FLUSH WITH MORTAR.
13. ALL BRICK AND MORTAR SHALL RECEIVE A 1/2" MORTAR PARGE COAT ON INSIDE AND OUTSIDE.
14. ALL SPACE BETWEEN PIPE AND OPENING INSIDE OF MANHOLE TO BE GROUTED WITH TYPE S MORTAR
15. SEWER MAIN PENETRATIONS AND/OR SERVICE LATERAL PENETRATIONS ENTERING AT 30" OR LESS ABOVE THE MANHOLE BENCH SHALL HAVE A SLIDE CONSTRUCTED OF BRICK AND MORTAR.(SEE DETAIL)
16. ALL PENETRATIONS ENTERING MANHOLE AT GREATER THAN 30" SHALL BE AN INSIDE DROP MANHOLE (SEE DETAIL).
17. INSIDE DROP MANHOLES, AND PUMP STATION RECEIVING MANHOLES SHALL BE MINIMUM 5' DIAMETER MANHOLES.
18. SANITARY SEWER MANHOLES SHALL BE COATED WITH COAL TAR EPOXY 20 MILS THROUGHOUT THE INSIDE OF THE MANHOLE.
19. ALL MANHOLES SHALL HAVE A SEWER GUARD INSERT INSTALLED – PLASTIC IS ALLOWED IN NON-TRAFFIC AREAS – STAINLESS STEEL INSERT PANS ARE REQUIRED IN TRAFFIC AREAS
20. MANHOLES SHALL BE TRAFFIC BEARING WITH A MINIMUM HS-20 LOAD ALLOWANCE.

N

SCALE: 1" = 50

0 25 50 100 150

REV.NO.	DESCRIPTIONS	DATE
C	ISSUED FOR PERMITTING	01/21/15
B	PRELIMINARY PLAT PENDER CO. REVIEW	10/10/14
A	75% CONSTRUCTION DOCUMENTS TO TLC FOR REVIEW	08/11/14

REVISIONS

PRELIMINARY - DO NOT USE FOR CONSTRUCTION

SEAL

NORTH CAROLINA PROFESSIONAL SEAL 038577 ENGINEER RICHARD A. MCKIMMON

01-21-15

McKIM & CREED
243 North Front Street
Wilmington, North Carolina 28401
Phone: (910)343-1048, Fax: (910)251-8282

NC LIC. No. F-1222
www.mckimcreed.com

Trask Land CO INC
1202 Eastwood Road
Wilmington, NC 28403
(910) 799-8755

BLAKE FARM

BLAKE FARM
TOPSAIL TOWNSHIP
PENDER COUNTY NORTH CAROLINA

ENLARGED UTILITY PLAN

DATE:	9 JANUARY 2015
MCE PROJ. #	6525-0001
DRAWN	CDN
DESIGNED	RAC
CHECKED	RAM
PROJ. MGR.	RAM

SCALE
HORIZONTAL: 1"=50'
VERTICAL: N/A

M&C FILE NUMBER CU102

DRAWING NUMBER 17

STATUS: FINAL PLAN NOT FOR CONSTRUCTION

REVISION C

S:\6525\0001\BI-Drawings\CU102-105_06525000\1.dwg, 1/27/2015 4:45:14 PM, cmursey

MATCHLINE - SEE SHEET CU106

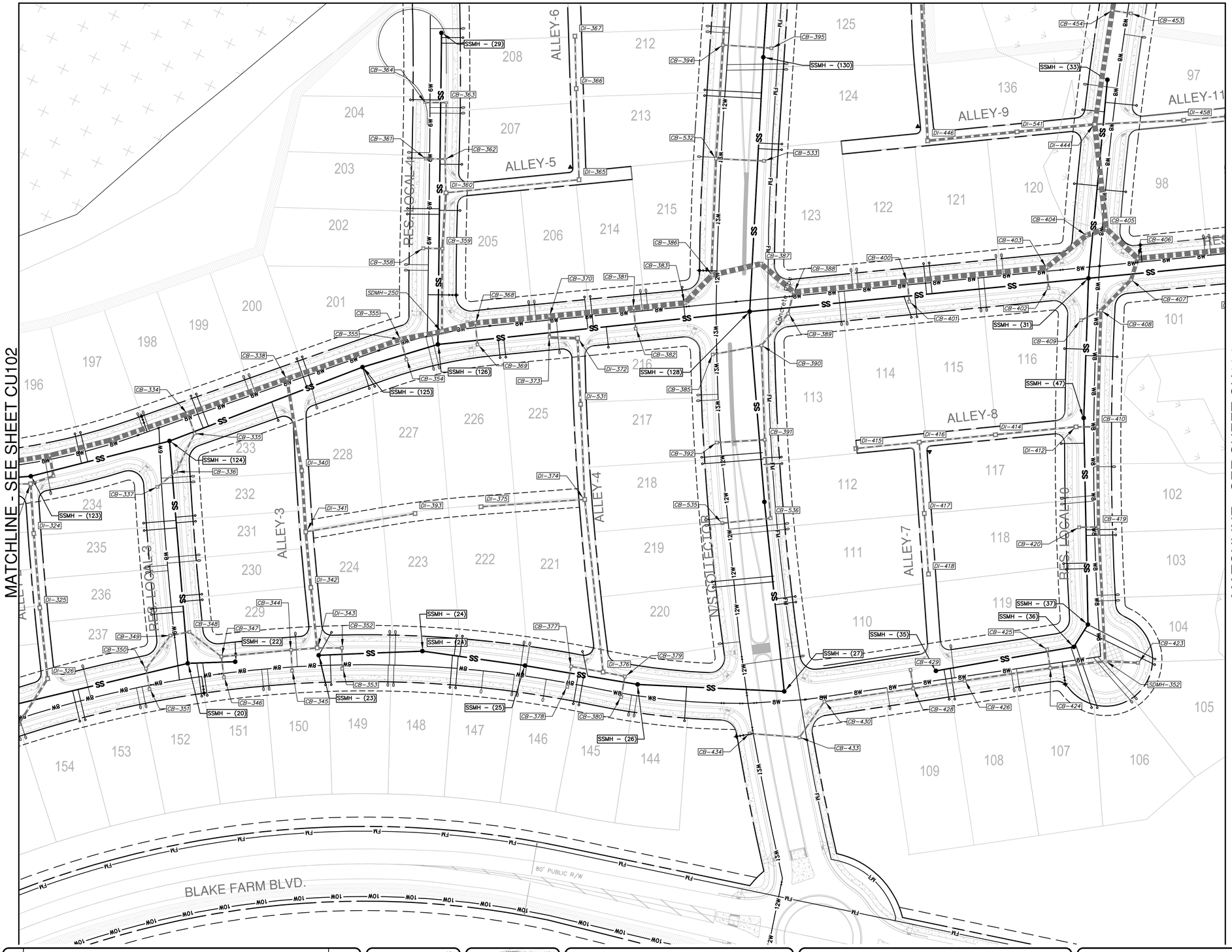

MATCHLINE - SEE SHEET CU102

MATCHLINE - SEE SHEET CU104

NOTES:

1. CONTRACTOR TO VERIFY SIZE, DEPTH, MATERIAL AND LOCATION FOR ALL UNDERGROUND UTILITIES PRIOR TO THE START OF CONSTRUCTION.
2. THE UNDERGROUND UTILITIES INDICATED ON THE PLANS HAVE BEEN TAKEN FROM INFORMATION MADE AVAILABLE FROM THE VARIOUS UTILITY OWNERS. THIS INFORMATION IS NOT INCLUSIVE OF ALL EXISTING UNDERGROUND UTILITIES AND CABLES. THE CONTRACTOR IS ADVISED THAT ADDITIONAL UNDERGROUND UTILITIES AND CABLES MAY EXISTING WHICH ARE NOT SHOWN ON THE PLANS. PLEASE BE ADVISED THAT THE UNDERGROUND UTILITIES AND CABLES COULD CONFLICT WITH THE WATER AND FORCEMAIN CONSTRUCTION AS SHOWN.
3. CLEARING LIMITS HAVE NOT BEEN SHOWN ON THE PLANS.
4. CONTRACTOR SHALL BRACE / SUPPORT ALL POWER POLES AS REQUIRED FOR CONSTRUCTION.
5. PRECAST CONCRETE MANHOLES SHALL MEET OR EXCEED THE REQUIREMENTS OF ASTM C 478. ALL SURFACES SHALL BE SMOOTH AND EVEN TEXTURED WITH A MINIMUM OF HONEYCOMB, FIN, AND OTHER IMPERFECTIONS.
6. JOINTS BETWEEN MANHOLE SECTIONS SHALL BE SEALED WATERTIGHT USING EITHER O-RING GASKETS CONFORMING WITH ASTM C 443 OR BUTYL RESIN CONFORMING WITH AASHTO M-198.
7. EXTERIOR JOINTS SHALL BE SEALED WITH A 4" WIDE BUTYL RUBBER WRAP.
8. ADD INTERIOR HIGH SOLIDS EPOXY PROTECTION COATING FOR ALL MANHOLES RECEIVING DISCHARGE FROM FORCE MAINS (MIN. 20 MILS).
9. HOLES FOR CONNECTION OF PIPE TO MANHOLE SHALL BE PRECAST OR CORED. DIAMETER OF HOLE SHALL NOT EXCEED OUTSIDE DIAMETER OR PIPE BY MORE THAN 3 INCHES.
10. CONNECTIONS OF PIPE TO MANHOLE SHALL BE MADE WATERTIGHT USING RESILIENT CONNECTORS CONFORMING TO ASTM C 923 OR NEOPRENE BOOTS EMBEDDED IN PRECAST BASE WITH STAINLESS STEEL COMPRESSION BANDS.
11. MANHOLE INVERTS SHALL BE INSTALLED USING BRICK AND MORTAR, OR MANHOLES MAY BE PRECAST, MONOLITHIC SECTIONS WITH FORMED INVERTS.
12. LIFT HOLES SHALL BE PLUGGED AND FILLED FLUSH WITH MORTAR.
13. ALL BRICK AND MORTAR SHALL RECEIVE A 1/2" MORTAR PARGE COAT ON INSIDE AND OUTSIDE.
14. ALL SPACE BETWEEN PIPE AND OPENING INSIDE OF MANHOLE TO BE GROUTED WITH TYPE S MORTAR
15. SEWER MAIN PENETRATIONS AND/OR SERVICE LATERAL PENETRATIONS ENTERING AT 30" OR LESS ABOVE THE MANHOLE BENCH SHALL HAVE A SLIDE CONSTRUCTED OF BRICK AND MORTAR.(SEE DETAIL)
16. ALL PENETRATIONS ENTERING MANHOLE AT GREATER THAN 30" SHALL BE AN INSIDE DROP MANHOLE (SEE DETAIL).
17. INSIDE DROP MANHOLES, AND PUMP STATION RECEIVING MANHOLES SHALL BE MINIMUM 5' DIAMETER MANHOLES.
18. SANITARY SEWER MANHOLES SHALL BE COATED WITH COAL TAR EPOXY 20 MILS THROUGHOUT THE INSIDE OF THE MANHOLE.
19. ALL MANHOLES SHALL HAVE A SEWER GUARD INSERT INSTALLED – PLASTIC IS ALLOWED IN NON-TRAFFIC AREAS – STAINLESS STEEL INSERT PANS ARE REQUIRED IN TRAFFIC AREAS
20. MANHOLES SHALL BE TRAFFIC BEARING WITH A MINIMUM HS-20 LOAD ALLOWANCE.

N

SCALE: 1" = 50

0 25 50 100 150

REV.NO.	DESCRIPTIONS	DATE
C	ISSUED FOR PERMITTING	01/21/15
B	PRELIMINARY PLAT PENDER CO. REVIEW	10/10/14
A	75% CONSTRUCTION DOCUMENTS TO T.L.C FOR REVIEW	08/11/14

REVISIONS

SEAL

PRELIMINARY- DO NOT USE FOR CONSTRUCTION

SEAL

NORTH CAROLINA PROFESSIONAL SEAL 038577 ENGINEER RICHARD A. CRISP

01-21-15

McKIM&CREED
243 North Front Street
Wilmington, North Carolina 28401
Phone: (910)343-1048, Fax: (910)251-8282

NC LIC. No. F-1222
www.mckimcreed.com

Trask Land CO INC
1202 Eastwood Road
Wilmington, NC 28403
(910) 799-8755

BLAKE FARM
EST. 1946

BLAKE FARM
TOPSAIL TOWNSHIP
PENDER COUNTY NORTH CAROLINA

ENLARGED UTILITY PLAN

DATE:	9 JANUARY 2015
MCE PROJ. #	6525-0001
DRAWN	CDN
DESIGNED	RAC
CHECKED	RAM
PROJ. MGR.	RAM

SCALE
HORIZONTAL: 1"=50'
VERTICAL: N/A

M&C FILE NUMBER CU103

DRAWING NUMBER 18

STATUS: FINAL PLAN NOT FOR CONSTRUCTION

REVISION C

S:\6525\0001\18-Drawings\CU102-106_06525000.1.dwg, 1/27/2015 4:46:14 PM, cmursey

MATCHLINE - SEE SHEETS CU105 & CU106

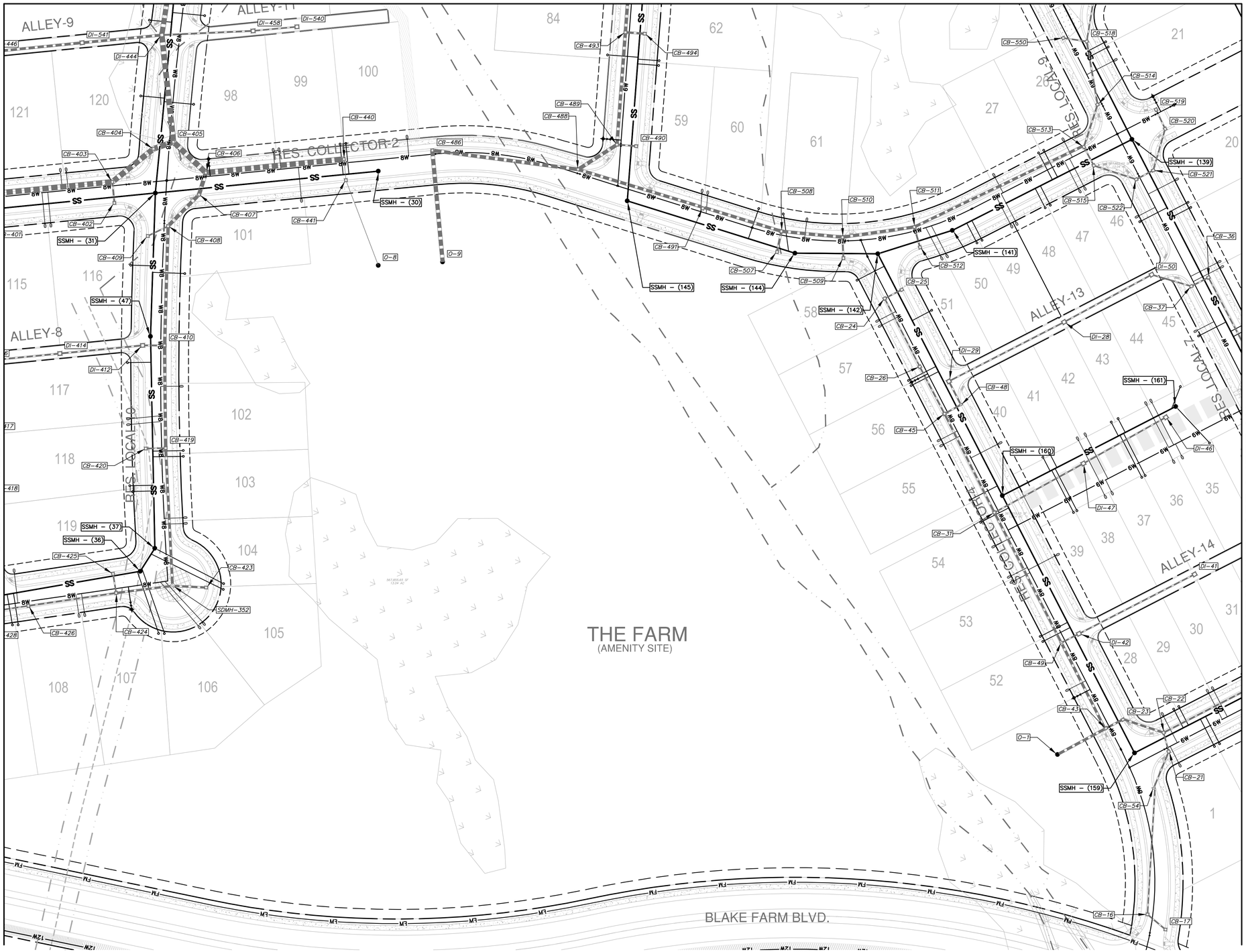

MATCHLINE - SEE SHEET CU103

MATCHLINE - SEE SHEET CU107

NOTES:

1. CONTRACTOR TO VERIFY SIZE, DEPTH, MATERIAL AND LOCATION FOR ALL UNDERGROUND UTILITIES PRIOR TO THE START OF CONSTRUCTION.
2. THE UNDERGROUND UTILITIES INDICATED ON THE PLANS HAVE BEEN TAKEN FROM INFORMATION MADE AVAILABLE FROM THE VARIOUS UTILITY OWNERS. THIS INFORMATION IS NOT INCLUSIVE OF ALL EXISTING UNDERGROUND UTILITIES AND CABLES. THE CONTRACTOR IS ADVISED THAT ADDITIONAL UNDERGROUND UTILITIES AND CABLES MAY EXISTING WHICH ARE NOT SHOWN ON THE PLANS. PLEASE BE ADVISED THAT THE UNDERGROUND UTILITIES AND CABLES COULD CONFLICT WITH THE WATER AND FORCEMAIN CONSTRUCTION AS SHOWN.
3. CLEARING LIMITS HAVE NOT BEEN SHOWN ON THE PLANS.
4. CONTRACTOR SHALL BRACE / SUPPORT ALL POWER POLES AS REQUIRED FOR CONSTRUCTION.
5. PRECAST CONCRETE MANHOLES SHALL MEET OR EXCEED THE REQUIREMENTS OF ASTM C 478. ALL SURFACES SHALL BE SMOOTH AND EVEN TEXTURED WITH A MINIMUM OF HONEYCOMB, FIN, AND OTHER IMPERFECTIONS.
6. JOINTS BETWEEN MANHOLE SECTIONS SHALL BE SEALED WATERTIGHT USING EITHER O-RING GASKETS CONFORMING WITH ASTM C 443 OR BUTYL RESIN CONFORMING WITH AASHTO M-198.
7. EXTERIOR JOINTS SHALL BE SEALED WITH A 4" WIDE BUTYL RUBBER WRAP.
8. ADD INTERIOR HIGH SOLIDS EPOXY PROTECTION COATING FOR ALL MANHOLES RECEIVING DISCHARGE FROM FORCE MAINS (MIN. 20 MILS).
9. HOLES FOR CONNECTION OF PIPE TO MANHOLE SHALL BE PRECAST OR CORED. DIAMETER OF HOLE SHALL NOT EXCEED OUTSIDE DIAMETER OR PIPE BY MORE THAN 3 INCHES.
10. CONNECTIONS OF PIPE TO MANHOLE SHALL BE MADE WATERTIGHT USING RESILIENT CONNECTORS CONFORMING TO ASTM C 923 OR NEOPRENE BOOTS EMBEDDED IN PRECAST BASE WITH STAINLESS STEEL COMPRESSION BANDS.
11. MANHOLE INVERTS SHALL BE INSTALLED USING BRICK AND MORTAR, OR MANHOLES MAY BE PRECAST, MONOLITHIC SECTIONS WITH FORMED INVERTS.
12. LIFT HOLES SHALL BE PLUGGED AND FILLED FLUSH WITH MORTAR.
13. ALL BRICK AND MORTAR SHALL RECEIVE A 1/2" MORTAR PARGE COAT ON INSIDE AND OUTSIDE.
14. ALL SPACE BETWEEN PIPE AND OPENING INSIDE OF MANHOLE TO BE GROUTED WITH TYPE S MORTAR
15. SEWER MAIN PENETRATIONS AND/OR SERVICE LATERAL PENETRATIONS ENTERING AT 30" OR LESS ABOVE THE MANHOLE BENCH SHALL HAVE A SLIDE CONSTRUCTED OF BRICK AND MORTAR.(SEE DETAIL)
16. ALL PENETRATIONS ENTERING MANHOLE AT GREATER THAN 30" SHALL BE AN INSIDE DROP MANHOLE (SEE DETAIL).
17. INSIDE DROP MANHOLES, AND PUMP STATION RECEIVING MANHOLES SHALL BE MINIMUM 5' DIAMETER MANHOLES.
18. SANITARY SEWER MANHOLES SHALL BE COATED WITH COAL TAR EPOXY 20 MILS THROUGHOUT THE INSIDE OF THE MANHOLE.
19. ALL MANHOLES SHALL HAVE A SEWER GUARD INSERT INSTALLED - PLASTIC IS ALLOWED IN NON-TRAFFIC AREAS - STAINLESS STEEL INSERT PANS ARE REQUIRED IN TRAFFIC AREAS
20. MANHOLES SHALL BE TRAFFIC BEARING WITH A MINIMUM HS-20 LOAD ALLOWANCE.

REV.NO.	DESCRIPTIONS	DATE
C	ISSUED FOR PERMITTING	01/21/15
B	PRELIMINARY PLAT PENDER CO. REVIEW	10/10/14
A	75% CONSTRUCTION DOCUMENTS TO TLC FOR REVIEW	08/11/14

REVISIONS

PRELIMINARY - DO NOT USE FOR CONSTRUCTION

SEAL 038577 ENGINEER RICHARD A. ALLEN

McKIM & CREED
243 North Front Street
Wilmington, North Carolina 28401
Phone: (910)343-1048, Fax: (910)251-8282

NC LIC. No. F-1222
www.mckimcreed.com

Trask Land CO INC
1202 Eastwood Road
Wilmington, NC 28403
(910) 799-8755

BLAKE FARM

BLAKE FARM
TOPSAIL TOWNSHIP
PENDER COUNTY NORTH CAROLINA

ENLARGED UTILITY PLAN

DATE:	9 JANUARY 2015
MCE PROJ. #	6525-0001
DRAWN	CDN
DESIGNED	RAC
CHECKED	RAM
PROJ. MGR.	RAM

SCALE
HORIZONTAL: 1"=50'
VERTICAL: N/A

M&C FILE NUMBER CU104
DRAWING NUMBER 19

STATUS: FINAL PLAN NOT FOR CONSTRUCTION
REVISION C

S:\6525\0001\80-Drawings\CU102-105_06525\0001.dwg, 1/27/2015 4:47:23 PM, cnursey

NOTES:

1. CONTRACTOR TO VERIFY SIZE, DEPTH, MATERIAL AND LOCATION FOR ALL UNDERGROUND UTILITIES PRIOR TO THE START OF CONSTRUCTION.
2. THE UNDERGROUND UTILITIES INDICATED ON THE PLANS HAVE BEEN TAKEN FROM INFORMATION MADE AVAILABLE FROM THE VARIOUS UTILITY OWNERS. THIS INFORMATION IS NOT INCLUSIVE OF ALL EXISTING UNDERGROUND UTILITIES AND CABLES. THE CONTRACTOR IS ADVISED THAT ADDITIONAL UNDERGROUND UTILITIES AND CABLES MAY EXISTING WHICH ARE NOT SHOWN ON THE PLANS. PLEASE BE ADVISED THAT THE UNDERGROUND UTILITIES AND CABLES COULD CONFLICT WITH THE WATER AND FORCEMAIN CONSTRUCTION AS SHOWN.
3. CLEARING LIMITS HAVE NOT BEEN SHOWN ON THE PLANS.
4. CONTRACTOR SHALL BRACE / SUPPORT ALL POWER POLES AS REQUIRED FOR CONSTRUCTION.
5. PRECAST CONCRETE MANHOLES SHALL MEET OR EXCEED THE REQUIREMENTS OF ASTM C 478. ALL SURFACES SHALL BE SMOOTH AND EVEN TEXTURED WITH A MINIMUM OF HONEYCOMB, FIN, AND OTHER IMPERFECTIONS.
6. JOINTS BETWEEN MANHOLE SECTIONS SHALL BE SEALED WATERTIGHT USING EITHER O-RING GASKETS CONFORMING WITH ASTM C 443 OR BUTYL RESIN CONFORMING WITH AASHTO M-198.
7. EXTERIOR JOINTS SHALL BE SEALED WITH A 4" WIDE BUTYL RUBBER WRAP.
8. ADD INTERIOR HIGH SOLIDS EPOXY PROTECTION COATING FOR ALL MANHOLES RECEIVING DISCHARGE FROM FORCE MAINS (MIN. 20 MILS).
9. HOLES FOR CONNECTION OF PIPE TO MANHOLE SHALL BE PRECAST OR CORED. DIAMETER OF HOLE SHALL NOT EXCEED OUTSIDE DIAMETER OR PIPE BY MORE THAN 3 INCHES.
10. CONNECTIONS OF PIPE TO MANHOLE SHALL BE MADE WATERTIGHT USING RESILIENT CONNECTORS CONFORMING TO ASTM C 923 OR NEOPRENE BOOTS EMBEDDED IN PRECAST BASE WITH STAINLESS STEEL COMPRESSION BANDS.
11. MANHOLE INVERTS SHALL BE INSTALLED USING BRICK AND MORTAR, OR MANHOLES MAY BE PRECAST, MONOLITHIC SECTIONS WITH FORMED INVERTS.
12. LIFT HOLES SHALL BE PLUGGED AND FILLED FLUSH WITH MORTAR.
13. ALL BRICK AND MORTAR SHALL RECEIVE A 1/2" MORTAR PARGE COAT ON INSIDE AND OUTSIDE.
14. ALL SPACE BETWEEN PIPE AND OPENING INSIDE OF MANHOLE TO BE GROUTED WITH TYPE S MORTAR
15. SEWER MAIN PENETRATIONS AND/OR SERVICE LATERAL PENETRATIONS ENTERING AT 30" OR LESS ABOVE THE MANHOLE BENCH SHALL HAVE A SLIDE CONSTRUCTED OF BRICK AND MORTAR.(SEE DETAIL)
16. ALL PENETRATIONS ENTERING MANHOLE AT GREATER THAN 30" SHALL BE AN INSIDE DROP MANHOLE (SEE DETAIL).
17. INSIDE DROP MANHOLES, AND PUMP STATION RECEIVING MANHOLES SHALL BE MINIMUM 5' DIAMETER MANHOLES.
18. SANITARY SEWER MANHOLES SHALL BE COATED WITH COAL TAR EPOXY 20 MILS THROUGHOUT THE INSIDE OF THE MANHOLE.
19. ALL MANHOLES SHALL HAVE A SEWER GUARD INSERT INSTALLED - PLASTIC IS ALLOWED IN NON-TRAFFIC AREAS - STAINLESS STEEL INSERT PANS ARE REQUIRED IN TRAFFIC AREAS
20. MANHOLES SHALL BE TRAFFIC BEARING WITH A MINIMUM HS-20 LOAD ALLOWANCE.

REV.NO.	DESCRIPTIONS	DATE
C	ISSUED FOR PERMITTING	01/21/15
B	PRELIMINARY PLAT PENDER CO. REVIEW	10/10/14
A	75% CONSTRUCTION DOCUMENTS TO TLC FOR REVIEW	08/11/14

REVISIONS

PRELIMINARY - DO NOT USE FOR CONSTRUCTION

SEAL

NORTH CAROLINA PROFESSIONAL SEAL 038577 ENGINEER RICHARD A. MASEN

01-21-15

McKIM&CREED
243 North Front Street
Wilmington, North Carolina 28401
Phone: (910)343-1048, Fax: (910)251-8282

NC LIC. No. F-1222
www.mckimcreed.com

Trask Land CO INC
1202 Eastwood Road
Wilmington, NC 28403
(910) 799-8755

BLAKE FARM
TOPSAIL TOWNSHIP
PENDER COUNTY NORTH CAROLINA

ENLARGED UTILITY PLAN

DATE:	9 JANUARY 2015
MCE PROJ. #	6525-0001
DRAWN	CDN
DESIGNED	RAC
CHECKED	RAM
PROJ. MGR.	RAM

SCALE
HORIZONTAL: 1"=50'
VERTICAL: N/A

M&C FILE NUMBER CU105
DRAWING NUMBER 20

STATUS: FINAL PLAN NOT FOR CONSTRUCTION
REVISION C

S:\6525\0001\8D-Drawings\CU102-105_06525001.dwg, 12/7/2015 4:48:38 PM, cmursey

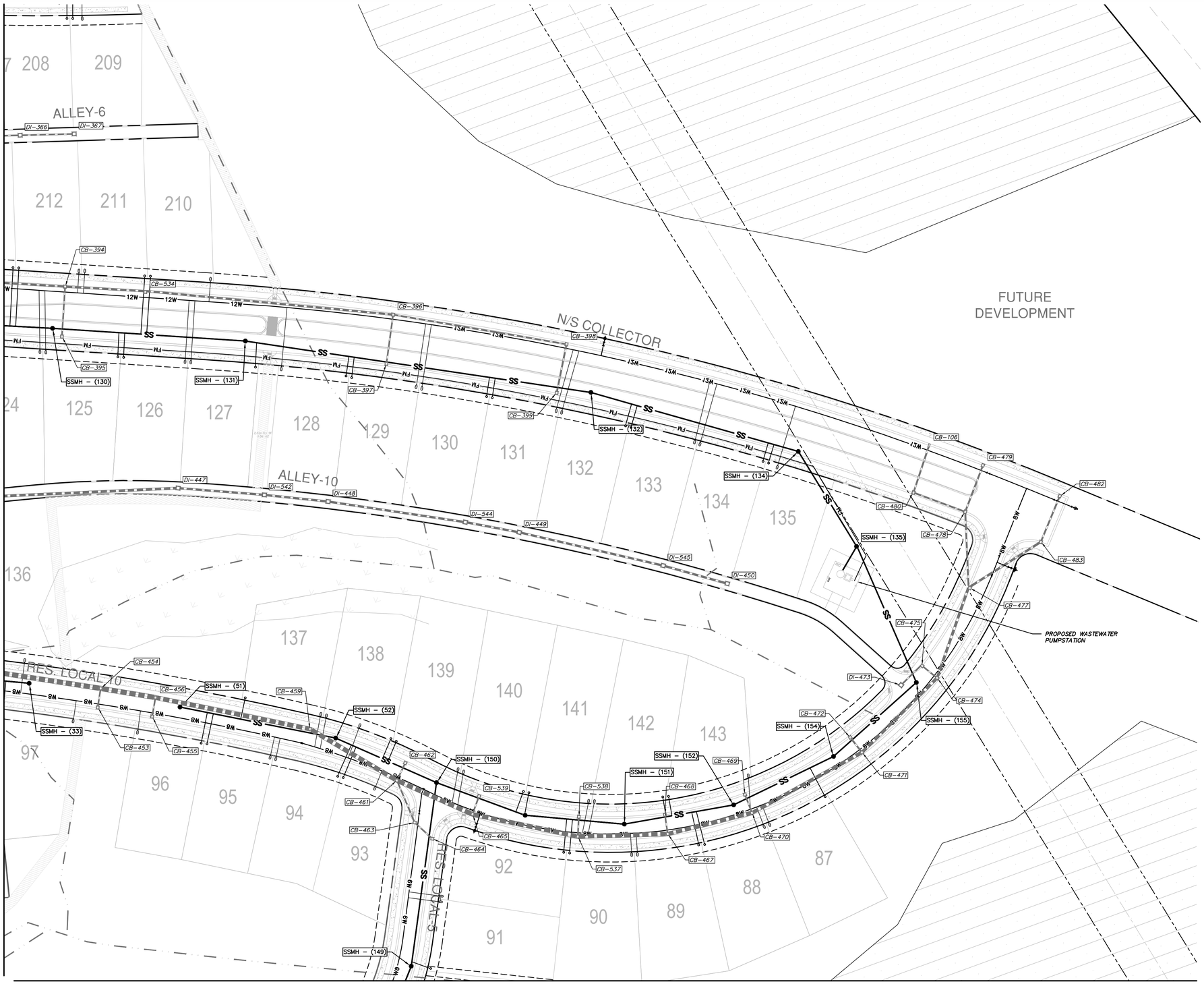

NOTES:

1. CONTRACTOR TO VERIFY SIZE, DEPTH, MATERIAL AND LOCATION FOR ALL UNDERGROUND UTILITIES PRIOR TO THE START OF CONSTRUCTION.
2. THE UNDERGROUND UTILITIES INDICATED ON THE PLANS HAVE BEEN TAKEN FROM INFORMATION MADE AVAILABLE FROM THE VARIOUS UTILITY OWNERS. THIS INFORMATION IS NOT INCLUSIVE OF ALL EXISTING UNDERGROUND UTILITIES AND CABLES. THE CONTRACTOR IS ADVISED THAT ADDITIONAL UNDERGROUND UTILITIES AND CABLES MAY EXISTING WHICH ARE NOT SHOWN ON THE PLANS. PLEASE BE ADVISED THAT THE UNDERGROUND UTILITIES AND CABLES COULD CONFLICT WITH THE WATER AND FORCEMAIN CONSTRUCTION AS SHOWN.
3. CLEARING LIMITS HAVE NOT BEEN SHOWN ON THE PLANS.
4. CONTRACTOR SHALL BRACE / SUPPORT ALL POWER POLES AS REQUIRED FOR CONSTRUCTION.
5. PRECAST CONCRETE MANHOLES SHALL MEET OR EXCEED THE REQUIREMENTS OF ASTM C 478. ALL SURFACES SHALL BE SMOOTH AND EVEN TEXTURED WITH A MINIMUM OF HONEYCOMB, FIN, AND OTHER IMPERFECTIONS.
6. JOINTS BETWEEN MANHOLE SECTIONS SHALL BE SEALED WATERTIGHT USING EITHER O-RING GASKETS CONFORMING WITH ASTM C 443 OR BUTYL RESIN CONFORMING WITH AASHTO M-198.
7. EXTERIOR JOINTS SHALL BE SEALED WITH A 4" WIDE BUTYL RUBBER WRAP.
8. ADD INTERIOR HIGH SOLIDS EPOXY PROTECTION COATING FOR ALL MANHOLES RECEIVING DISCHARGE FROM FORCE MAINS (MIN. 20 MILS).
9. HOLES FOR CONNECTION OF PIPE TO MANHOLE SHALL BE PRECAST OR CORED. DIAMETER OF HOLE SHALL NOT EXCEED OUTSIDE DIAMETER OR PIPE BY MORE THAN 3 INCHES.
10. CONNECTIONS OF PIPE TO MANHOLE SHALL BE MADE WATERTIGHT USING RESILIENT CONNECTORS CONFORMING TO ASTM C 923 OR NEOPRENE BOOTS EMBEDDED IN PRECAST BASE WITH STAINLESS STEEL COMPRESSION BANDS.
11. MANHOLE INVERTS SHALL BE INSTALLED USING BRICK AND MORTAR, OR MANHOLES MAY BE PRECAST, MONOLITHIC SECTIONS WITH FORMED INVERTS.
12. LIFT HOLES SHALL BE PLUGGED AND FILLED FLUSH WITH MORTAR.
13. ALL BRICK AND MORTAR SHALL RECEIVE A 1/2" MORTAR PARGE COAT ON INSIDE AND OUTSIDE.
14. ALL SPACE BETWEEN PIPE AND OPENING INSIDE OF MANHOLE TO BE GROUTED WITH TYPE S MORTAR
15. SEWER MAIN PENETRATIONS AND/OR SERVICE LATERAL PENETRATIONS ENTERING AT 30" OR LESS ABOVE THE MANHOLE BENCH SHALL HAVE A SLIDE CONSTRUCTED OF BRICK AND MORTAR.(SEE DETAIL)
16. ALL PENETRATIONS ENTERING MANHOLE AT GREATER THAN 30" SHALL BE AN INSIDE DROP MANHOLE (SEE DETAIL).
17. INSIDE DROP MANHOLES, AND PUMP STATION RECEIVING MANHOLES SHALL BE MINIMUM 5' DIAMETER MANHOLES.
18. SANITARY SEWER MANHOLES SHALL BE COATED WITH COAL TAR EPOXY 20 MILS THROUGHOUT THE INSIDE OF THE MANHOLE.
19. ALL MANHOLES SHALL HAVE A SEWER GUARD INSERT INSTALLED - PLASTIC IS ALLOWED IN NON-TRAFFIC AREAS - STAINLESS STEEL INSERT PANS ARE REQUIRED IN TRAFFIC AREAS
20. MANHOLES SHALL BE TRAFFIC BEARING WITH A MINIMUM HS-20 LOAD ALLOWANCE.

SCALE: 1" = 50

0 25 50 100 150

N

REV.NO.	DESCRIPTIONS	DATE
C	ISSUED FOR PERMITTING	01/21/15
B	PRELIMINARY PLAT PENDER CO. REVIEW	10/10/14
A	75% CONSTRUCTION DOCUMENTS TO T.I.C FOR REVIEW	08/15/14

REVISIONS

PRELIMINARY - DO NOT USE FOR CONSTRUCTION

SEAL

SEAL 038577 ENGINEER RICHARD A. MEHEN NORTH CAROLINA PROFESSIONAL

01-21-15

McKIM&CREED
243 North Front Street
Wilmington, North Carolina 28401
Phone: (910)343-1048, Fax: (910)251-8282

NC LIC. No. F-1222
www.mckimcreed.com

Trask Land CO INC
1202 Eastwood Road
Wilmington, NC 28403
(910) 799-8755

BLAKE FARM
EST. 1946

BLAKE FARM

TOPSAIL TOWNSHIP
PENDER COUNTY NORTH CAROLINA

ENLARGED UTILITY PLAN

DATE:	9 JANUARY 2015
MCE PROJ. #	6525-0001
DRAWN	CDN
DESIGNED	RAC
CHECKED	RAM
PROJ. MGR.	RAM

SCALE
HORIZONTAL: 1"=50'
VERTICAL: N/A

M&C FILE NUMBER: CU106
DRAWING NUMBER: 21

STATUS: FINAL PLAN NOT FOR CONSTRUCTION
REVISION: C

S:\6525\0001\80-Drawings\CU106-107_065250001.dwg, 1/27/2015 4:52:36 PM, cnursey

MATCHLINE - SEE SHEET CU105

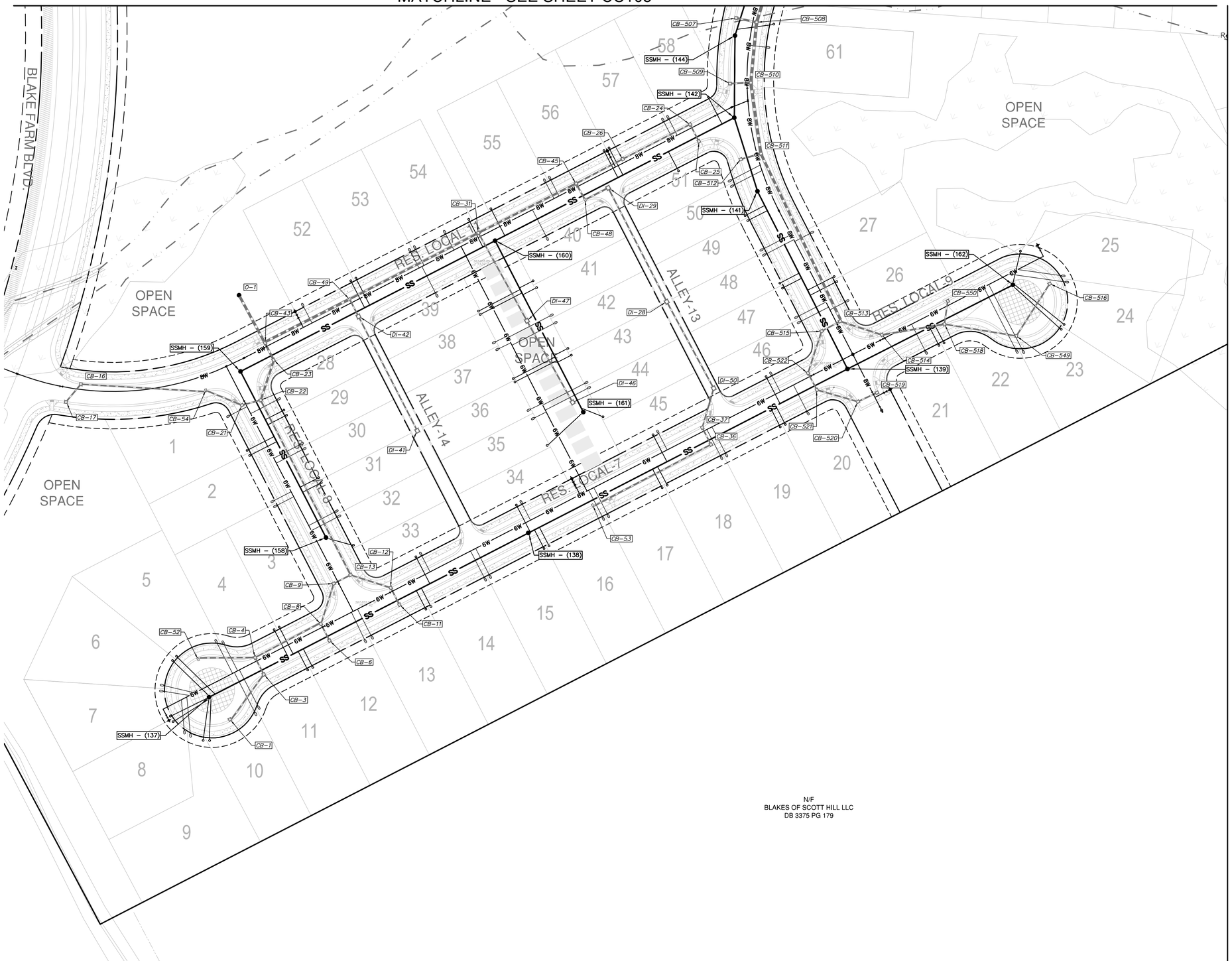

NOTES:

1. CONTRACTOR TO VERIFY SIZE, DEPTH, MATERIAL AND LOCATION FOR ALL UNDERGROUND UTILITIES PRIOR TO THE START OF CONSTRUCTION.
2. THE UNDERGROUND UTILITIES INDICATED ON THE PLANS HAVE BEEN TAKEN FROM INFORMATION MADE AVAILABLE FROM THE VARIOUS UTILITY OWNERS. THIS INFORMATION IS NOT INCLUSIVE OF ALL EXISTING UNDERGROUND UTILITIES AND CABLES. THE CONTRACTOR IS ADVISED THAT ADDITIONAL UNDERGROUND UTILITIES AND CABLES MAY EXISTING WHICH ARE NOT SHOWN ON THE PLANS. PLEASE BE ADVISED THAT THE UNDERGROUND UTILITIES AND CABLES COULD CONFLICT WITH THE WATER AND FORCEMAIN CONSTRUCTION AS SHOWN.
3. CLEARING LIMITS HAVE NOT BEEN SHOWN ON THE PLANS.
4. CONTRACTOR SHALL BRACE / SUPPORT ALL POWER POLES AS REQUIRED FOR CONSTRUCTION.
5. PRECAST CONCRETE MANHOLES SHALL MEET OR EXCEED THE REQUIREMENTS OF ASTM C 478. ALL SURFACES SHALL BE SMOOTH AND EVEN TEXTURED WITH A MINIMUM OF HONEYCOMB, FIN, AND OTHER IMPERFECTIONS.
6. JOINTS BETWEEN MANHOLE SECTIONS SHALL BE SEALED WATERTIGHT USING EITHER O-RING GASKETS CONFORMING WITH ASTM C 443 OR BUTYL RESIN CONFORMING WITH AASHTO M-198.
7. EXTERIOR JOINTS SHALL BE SEALED WITH A 4" WIDE BUTYL RUBBER WRAP.
8. ADD INTERIOR HIGH SOLIDS EPOXY PROTECTION COATING FOR ALL MANHOLES RECEIVING DISCHARGE FROM FORCE MAINS (MIN. 20 MILS).
9. HOLES FOR CONNECTION OF PIPE TO MANHOLE SHALL BE PRECAST OR CORED. DIAMETER OF HOLE SHALL NOT EXCEED OUTSIDE DIAMETER OR PIPE BY MORE THAN 3 INCHES.
10. CONNECTIONS OF PIPE TO MANHOLE SHALL BE MADE WATERTIGHT USING RESILIENT CONNECTORS CONFORMING TO ASTM C 923 OR NEOPRENE BOOTS EMBEDDED IN PRECAST BASE WITH STAINLESS STEEL COMPRESSION BANDS.
11. MANHOLE INVERTS SHALL BE INSTALLED USING BRICK AND MORTAR, OR MANHOLES MAY BE PRECAST, MONOLITHIC SECTIONS WITH FORMED INVERTS.
12. LIFT HOLES SHALL BE PLUGGED AND FILLED FLUSH WITH MORTAR.
13. ALL BRICK AND MORTAR SHALL RECEIVE A 1/2" MORTAR PARGE COAT ON INSIDE AND OUTSIDE.
14. ALL SPACE BETWEEN PIPE AND OPENING INSIDE OF MANHOLE TO BE GROUTED WITH TYPE S MORTAR
15. SEWER MAIN PENETRATIONS AND/OR SERVICE LATERAL PENETRATIONS ENTERING AT 30" OR LESS ABOVE THE MANHOLE BENCH SHALL HAVE A SLIDE CONSTRUCTED OF BRICK AND MORTAR.(SEE DETAIL)
16. ALL PENETRATIONS ENTERING MANHOLE AT GREATER THAN 30" SHALL BE AN INSIDE DROP MANHOLE (SEE DETAIL).
17. INSIDE DROP MANHOLES, AND PUMP STATION RECEIVING MANHOLES SHALL BE MINIMUM 5' DIAMETER MANHOLES.
18. SANITARY SEWER MANHOLES SHALL BE COATED WITH COAL TAR EPOXY 20 MILS THROUGHOUT THE INSIDE OF THE MANHOLE.
19. ALL MANHOLES SHALL HAVE A SEWER GUARD INSERT INSTALLED – PLASTIC IS ALLOWED IN NON-TRAFFIC AREAS – STAINLESS STEEL INSERT PANS ARE REQUIRED IN TRAFFIC AREAS
20. MANHOLES SHALL BE TRAFFIC BEARING WITH A MINIMUM HS-20 LOAD ALLOWANCE.

MATCHLINE - SEE SHEET CU106

SCALE: 1" = 50

0 25 50 100 150

N

REV.NO.	DESCRIPTIONS	DATE
C	ISSUED FOR PERMITTING	01/21/15
B	PRELIMINARY PLAT PENDER CO. REVIEW	10/10/14
A	75% CONSTRUCTION DOCUMENTS TO T.C FOR REVIEW	08/15/14

REVISIONS

SEAL

PRELIMINARY - DO NOT USE FOR CONSTRUCTION

SEAL

NORTH CAROLINA PROFESSIONAL ENGINEER SEAL 038577 RICHARD A. CRAVEN

01-21-15

McKIM&CREED
243 North Front Street
Wilmington, North Carolina 28401
Phone: (910)343-1048, Fax: (910)251-8282

NC LIC. No. F-1222
www.mckimcreed.com

Trask Land CO INC
1202 Eastwood Road
Wilmington, NC 28403
(910) 799-8755

BLAKE FARM – EST. 1946 –

BLAKE FARM
TOPSAIL TOWNSHIP
PENDER COUNTY NORTH CAROLINA

ENLARGED UTILITY PLAN

DATE:	9 JANUARY 2015
MCE PROJ. #	6525-0001
DRAWN	CDN
DESIGNED	RAC
CHECKED	RAM
PROJ. MGR.	RAM

SCALE
HORIZONTAL: 1"=50'
VERTICAL: N/A

M&C FILE NUMBER: CU107
DRAWING NUMBER: 22

STATUS: FINAL PLAN NOT FOR CONSTRUCTION
REVISION: C

S:\6525\0001\80-Drawings\CU106-107_065250001.dwg, 1/27/2015 4:53:33 PM, cnursey

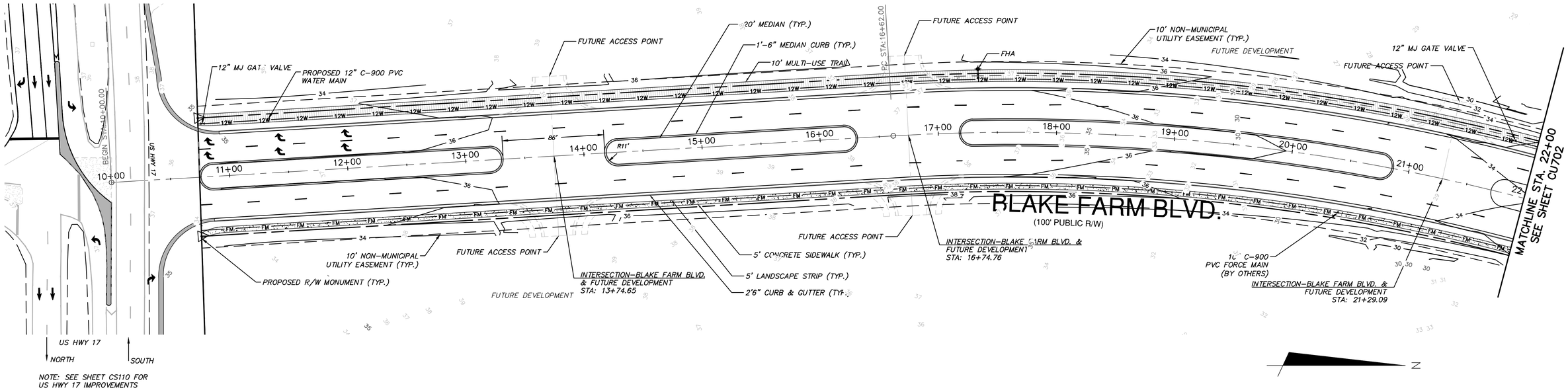

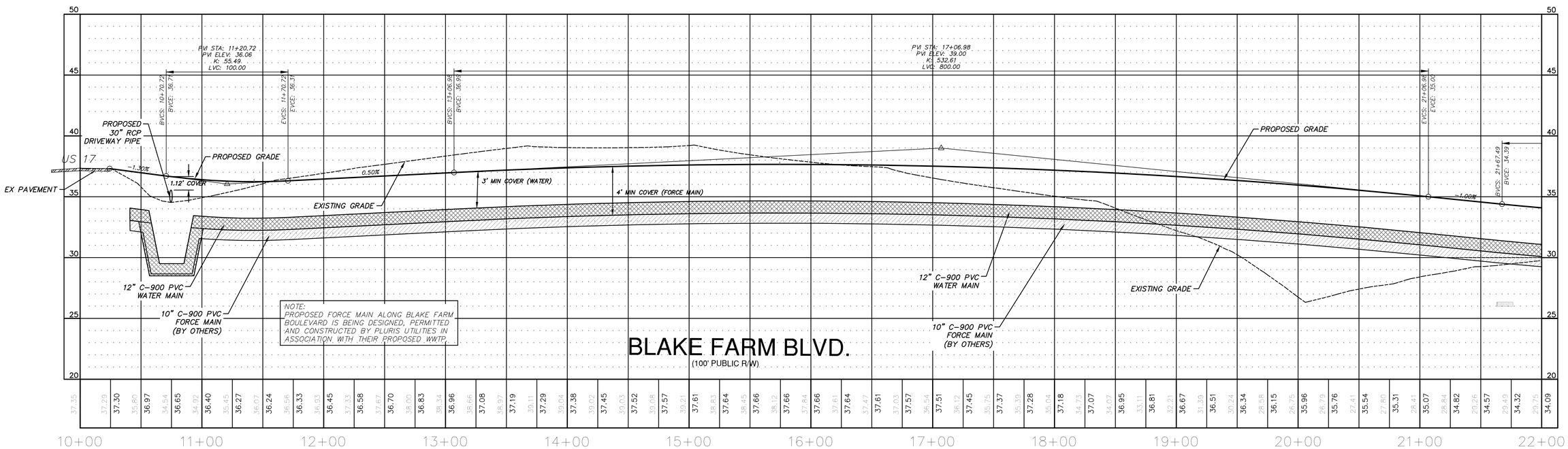

REV.NO.	DESCRIPTIONS	DATE
C	ISSUED FOR PERMITTING	01/21/15
B	PRELIMINARY PLAT PENDER CO. REVIEW	10/10/14
A	75% CONSTRUCTION DOCUMENTS TO TLC FOR REVIEW	08/15/14

REVISIONS

SEAL

PRELIMINARY - DO NOT USE FOR CONSTRUCTION

SEAL

NORTH CAROLINA PROFESSIONAL ENGINEER SEAL 038577 RICHARD A. MEYER

01-21-15

McKIM&CREED
243 North Front Street
Wilmington, North Carolina 28401
Phone: (910)343-1048, Fax: (910)251-8282

NC LIC. No. F-1222
www.mckimcreed.com

Trask Land CO INC
1202 Eastwood Road
Wilmington, NC 28403
(910) 799-8755

BLAKE FARM
EST. 1946

BLAKE FARM
TOPSAIL TOWNSHIP
PENDER COUNTY NORTH CAROLINA

BLAKE FARM BLVD.
PLAN AND PROFILE
STA. 10+00 TO 22+00

DATE:	9 JANUARY 2015
MCE PROJ. #	6525-0001
DRAWN	CDN
DESIGNED	RAC
CHECKED	RAM
PROJ. MGR.	RAM

SCALE
HORIZONTAL: 1"=40'
VERTICAL: 1"=4'

MAC FILE NUMBER: CU701
DRAWING NUMBER: 23

STATUS: FINAL PLAN NOT FOR CONSTRUCTION
REVISION: C

S:\6525\0001\Bh Drawings\Plan Profile Sheets\CU701_\6525\0001.dwg, 1/27/2015 4:56:54 PM, courtney

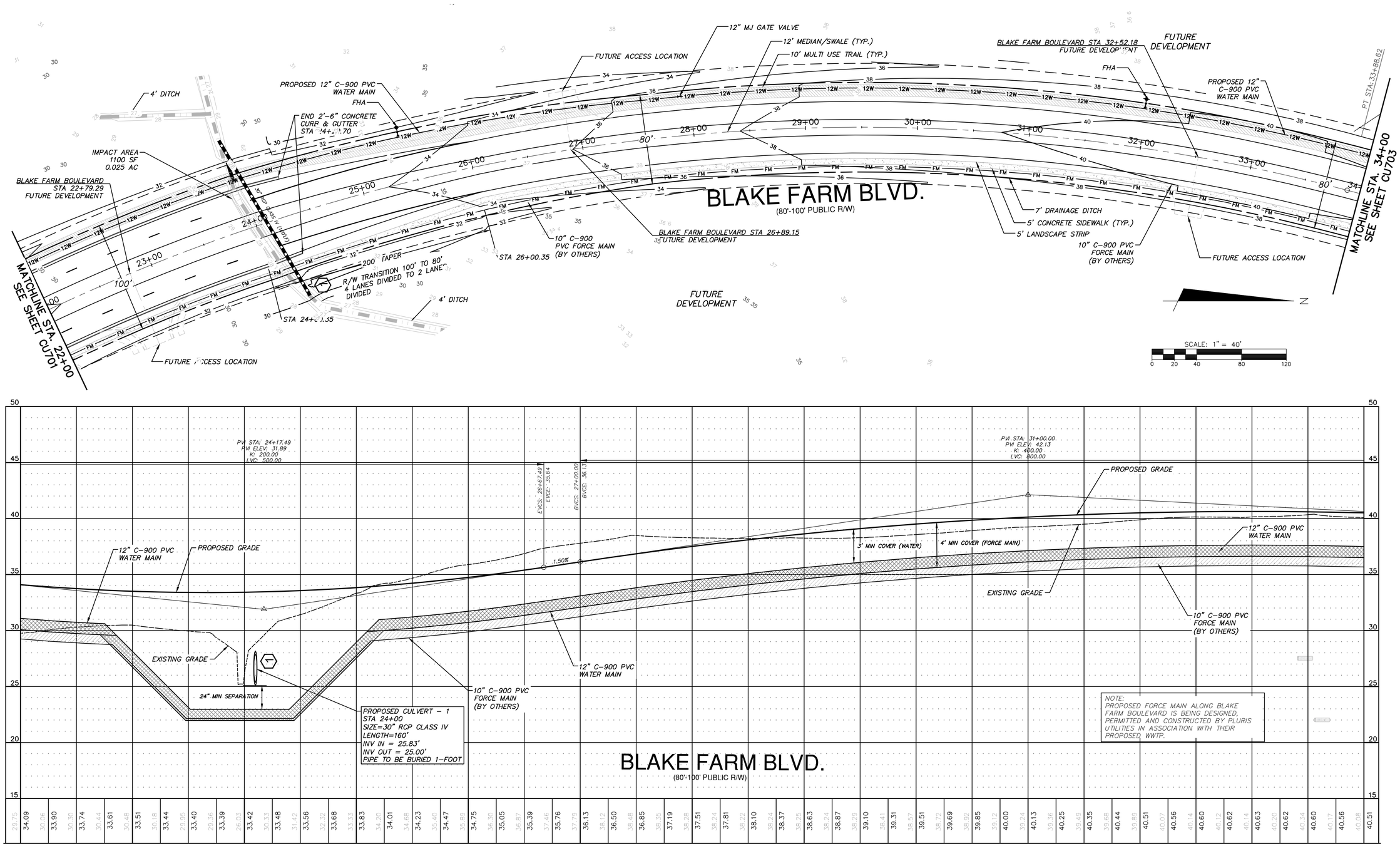

REV.NO.	DESCRIPTIONS	DATE
C	ISSUED FOR PERMITTING	01/21/15
B	PRELIMINARY PLAT PENDER CO. REVIEW	10/10/14
A	75% CONSTRUCTION DOCUMENTS TO TLC FOR REVIEW	08/11/14

REVISIONS

PRELIMINARY - DO NOT USE FOR CONSTRUCTION

SEAL

NORTH CAROLINA PROFESSIONAL ENGINEER SEAL 038577 RICHARD A. ENGLEN

01-21-15

McKIM & CREED
243 North Front Street
Wilmington, North Carolina 28401
Phone: (910)343-1048, Fax: (910)251-8282
NC LIC. No. F-1222
www.mckimcreed.com

Trask Land CO INC
1202 Eastwood Road
Wilmington, NC 28403
(910) 799-8755

BLAKE FARM

BLAKE FARM
TOPSAIL TOWNSHIP
PENDER COUNTY NORTH CAROLINA

BLAKE FARM BLVD.
PLAN AND PROFILE
STA 22+00 TO 34+00

DATE:	9 JANUARY 2015
MCE PROJ. #	6525-0001
DRAWN	CDN
DESIGNED	RAC
CHECKED	RAM
PROJ. MGR.	RAM

SCALE
HORIZONTAL: 1"=40'
VERTICAL: 1"=4'

M&C FILE NUMBER CU702
DRAWING NUMBER 24

STATUS: FINAL PLAN NOT FOR CONSTRUCTION
REVISION C

S:\6525\0001\80-Drawings\Plan Profile Sheets\CU702_06525000.dwg, 1/27/2015 5:00:45 PM, cnursey

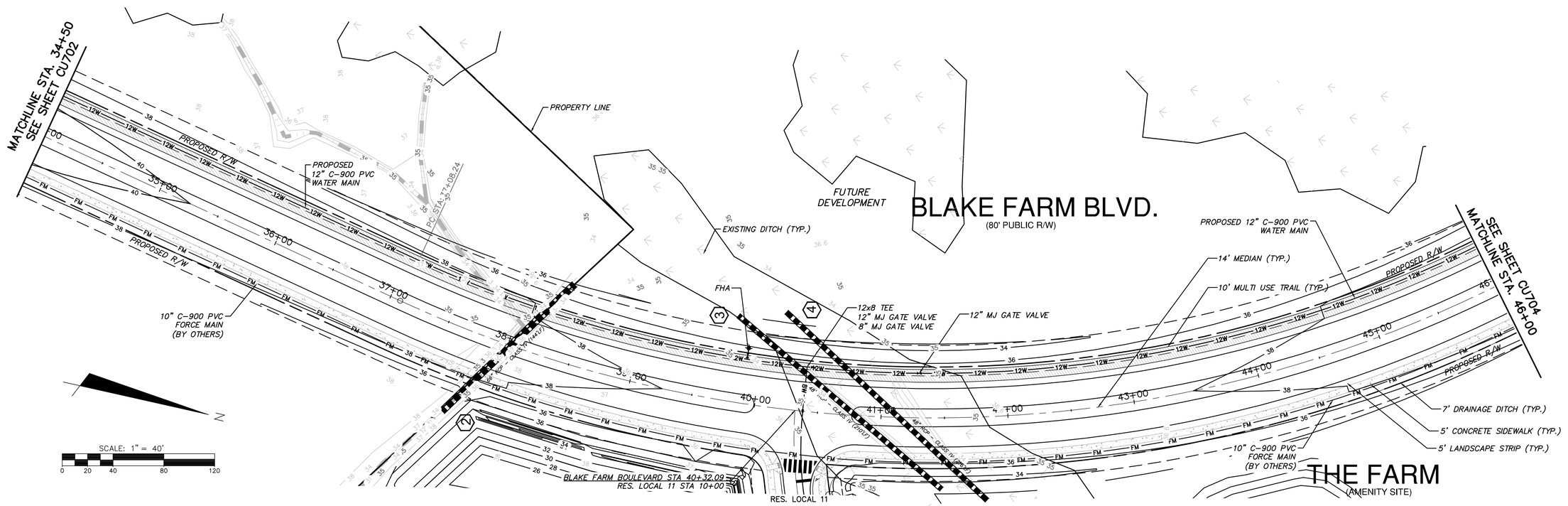

REV.NO.	DESCRIPTIONS	DATE
C	ISSUED FOR PERMITTING	01/21/15
B	PRELIMINARY PLAT PENDER CO. REVIEW	10/10/14
A	75% CONSTRUCTION DOCUMENTS TO TLC FOR REVIEW	08/11/14

REVISIONS

PRELIMINARY - DO NOT USE FOR CONSTRUCTION

SEAL

NORTH CAROLINA PROFESSIONAL SEAL 038577 ENGINEER RICHARD A. MEISSNER

01-21-15

McKIM&CREED
243 North Front Street
Wilmington, North Carolina 28401
Phone: (910)343-1048, Fax: (910)251-8282
NC LIC. No. F-1222
www.mckimcreed.com

Trask Land CO INC
1202 Eastwood Road
Wilmington, NC 28403
(910) 799-8755

BLAKE FARM

BLAKE FARM
TOPSAIL TOWNSHIP
PENDER COUNTY NORTH CAROLINA

BLAKE FARM BLVD.
PLAN AND PROFILE
STA 34+00 TO 46+00

DATE:	9 JANUARY 2015
MCE PROJ. #	6525-0001
DRAWN	CDN
DESIGNED	RAC
CHECKED	RAM
PROJ. MGR.	RAM

SCALE
HORIZONTAL: 1"=40'
VERTICAL: 1"=4'

M&C FILE NUMBER: CU703
DRAWING NUMBER: 25

STATUS: FINAL PLAN
NOT FOR CONSTRUCTION
REVISION: C

S:\6525\0001\90-Drawings\Plan Profile Sheets\CU703_06525000l.dwg, 1/27/2015 5:05:18 PM, cnursey

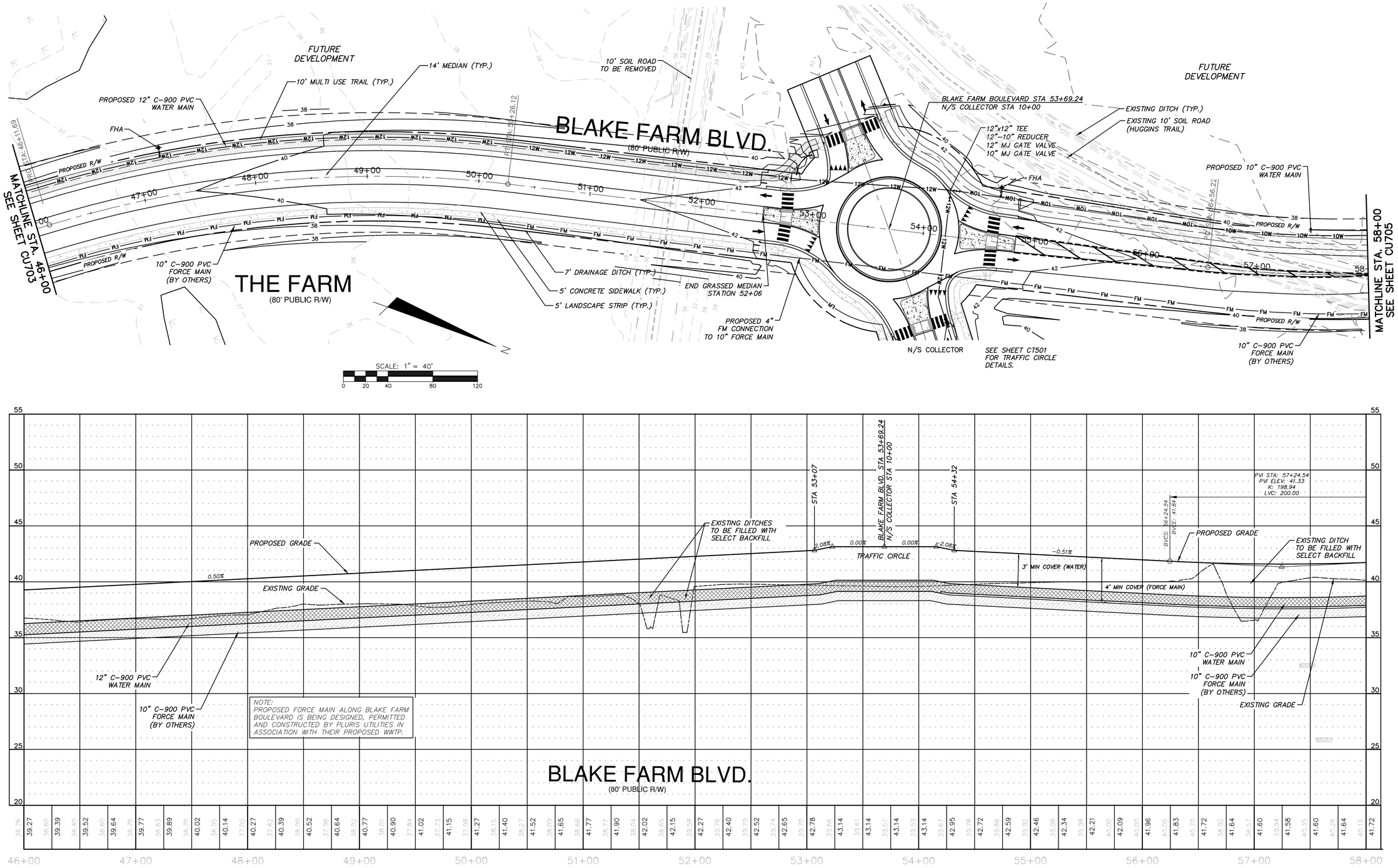

REV.NO.	DESCRIPTIONS	DATE
C	ISSUED FOR PERMITTING	01/21/15
B	PRELIMINARY PLAT PENDER CO. REVIEW	10/10/14
A	75% CONSTRUCTION DOCUMENTS TO TLC FOR REVIEW	08/11/14

REVISIONS

PRELIMINARY - DO NOT USE FOR CONSTRUCTION

SEAL

NORTH CAROLINA PROFESSIONAL SEAL 038577 ENGINEER RICHARD A. ANSEN

01-21-15

McKIM&CREED
243 North Front Street
Wilmington, North Carolina 28401
Phone: (910)343-1048, Fax: (910)251-8282
NC LIC. No. F-1222
www.mckimcreed.com

Trask Land CO INC
1202 Eastwood Road
Wilmington, NC 28403
(910) 799-8755

BLAKE FARM

BLAKE FARM
TOPSAIL TOWNSHIP
PENDER COUNTY NORTH CAROLINA

BLAKE FARM BLVD.
PLAN AND PROFILE
STA 46+00 TO 58+00

DATE:	9 JANUARY 2015
MCE PROJ. #	6525-0001
DRAWN	CDN
DESIGNED	RAC
CHECKED	RAM
PROJ. MGR.	RAM

SCALE
HORIZONTAL: 1"=40'
VERTICAL: 1"=4'

M&C FILE NUMBER: CU704
DRAWING NUMBER: 26

STATUS: FINAL PLAN NOT FOR CONSTRUCTION
REVISION: C

S:\6525\0001\90-Drawings\Plan Profile Sheets\CU704_06525\0001.dwg, 1/27/2015 5:09:01 PM, cnursey

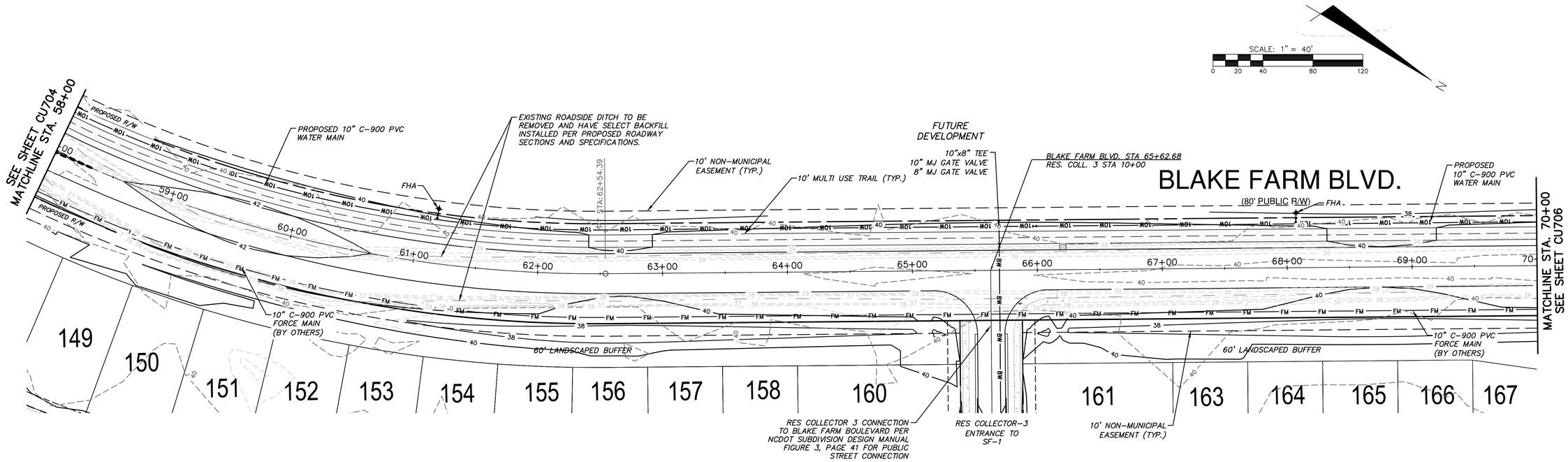

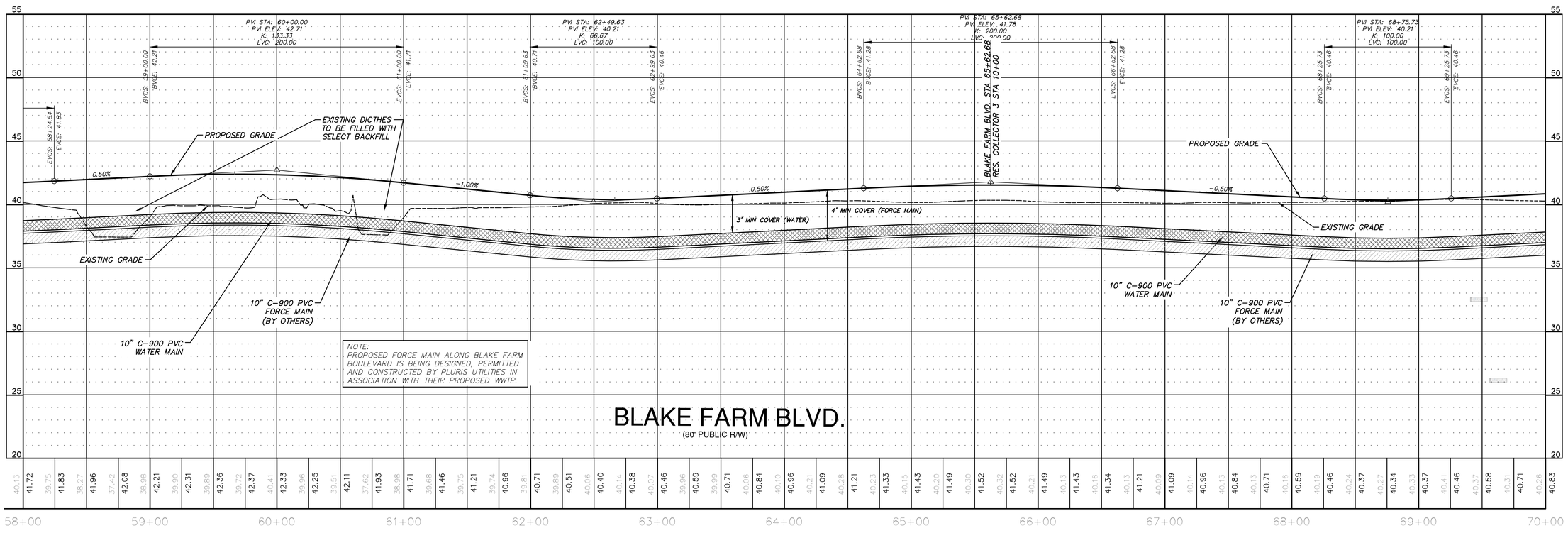

REV.NO.	DESCRIPTIONS	DATE
C	ISSUED FOR PERMITTING	01/21/15
B	PRELIMINARY FLAT RENDER CO. REVIEW	10/10/14
A	75% CONSTRUCTION DOCUMENTS TO TLC FOR REVIEW	08/11/14

REVISIONS

PRELIMINARY - DO NOT USE FOR CONSTRUCTION

SEAL

NORTH CAROLINA PROFESSIONAL SEAL 038577 ENGINEER RICHARD A. CASSEN 01-21-15

McKIM&CREED
243 North Front Street
Wilmington, North Carolina 28401
Phone: (910)343-1048, Fax: (910)251-8282
NC LIC. No. F-1222
www.mckimcreed.com

Trask Land CO INC
1202 Eastwood Road
Wilmington, NC 28403
(910) 799-8755

BLAKE FARM
EST. 1946

BLAKE FARM

TOPSAIL TOWNSHIP
PENDER COUNTY NORTH CAROLINA

BLAKE FARM BLVD.
PLAN AND PROFILE
STA 58+00 TO 70+00

DATE:	9 JANUARY 2015
MCE PROJ. #	6525-0001
DRAWN	CDN
DESIGNED	RAC
CHECKED	RAM
PROJ. MGR.	RAM

SCALE
HORIZONTAL: 1"=40'
VERTICAL: 1"=4'

M&C FILE NUMBER: CU705
DRAWING NUMBER: 27

STATUS: FINAL PLAN NOT FOR CONSTRUCTION
REVISION: C

S:\6525\0001\80-Drawings\Plan Profile Sheets\CU705_065250001.dwg, 1/27/2015 5:13:19 PM, cmursey

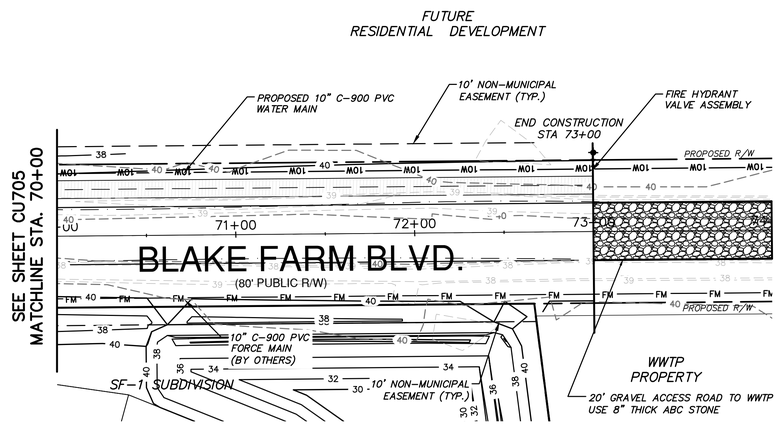

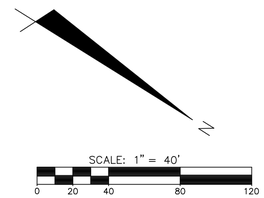

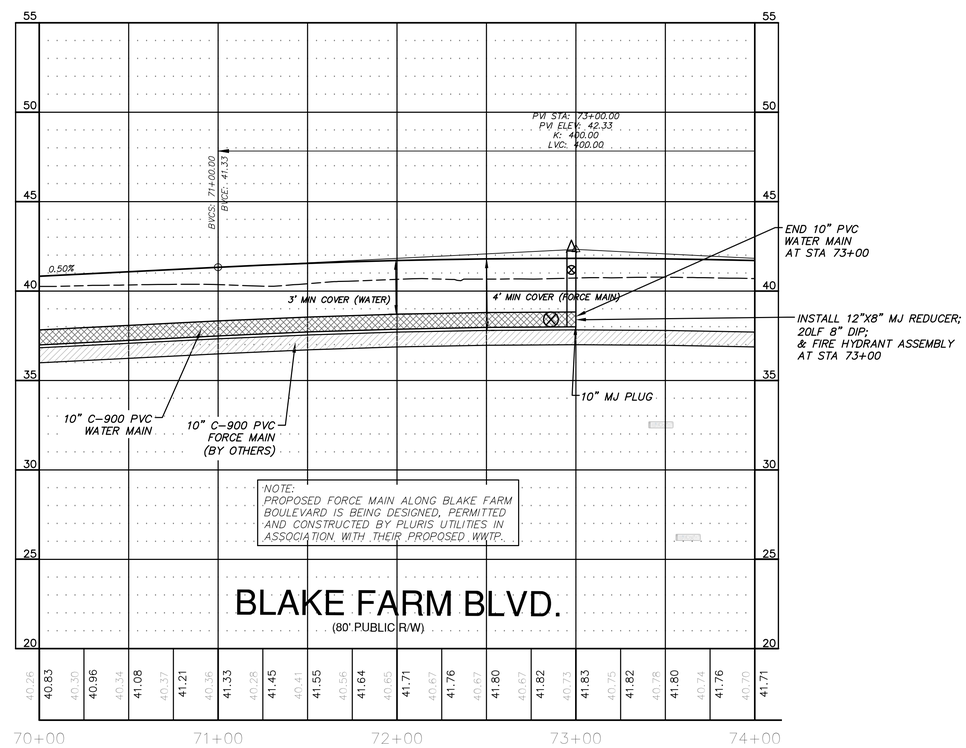

REV.NO.	DESCRIPTIONS	DATE
C	ISSUED FOR PERMITTING	01/21/15
B	PRELIMINARY PLAT PENDER CO. REVIEW	10/10/14
A	75% CONSTRUCTION DOCUMENTS TO TLC FOR REVIEW	08/15/14

REVISIONS

PRELIMINARY - DO NOT USE FOR CONSTRUCTION

SEAL

NORTH CAROLINA PROFESSIONAL SEAL 038577 ENGINEER RICHARD A. MEISSEN

01-21-15

McKIM & CREED
243 North Front Street
Wilmington, North Carolina 28401
Phone: (910)343-1048, Fax: (910)251-8282
NC LIC. No. F-1222
www.mckimcreed.com

Trask Land CO INC
1202 Eastwood Road
Wilmington, NC 28403
(910) 799-8755

BLAKE FARM

BLAKE FARM
TOPSAIL TOWNSHIP
PENDER COUNTY NORTH CAROLINA

BLAKE FARM BLVD.
PLAN AND PROFILE
STA 70+00 TO 74+00

DATE:	9 JANUARY 2015
MCE PROJ. #	6525-0001
DRAWN	CDN
DESIGNED	RAC
CHECKED	RAM
PROJ. MGR.	RAM

SCALE
HORIZONTAL: 1"=40'
VERTICAL: 1"=4'

M&C FILE NUMBER CU706
DRAWING NUMBER 28

STATUS: FINAL PLAN
NOT FOR CONSTRUCTION
REVISION C

S:\6525\0001\80-Drawings\Plan Profile Sheets\CU706_065250001.dwg, 1/27/2015 5:17:49 PM, cnunsey

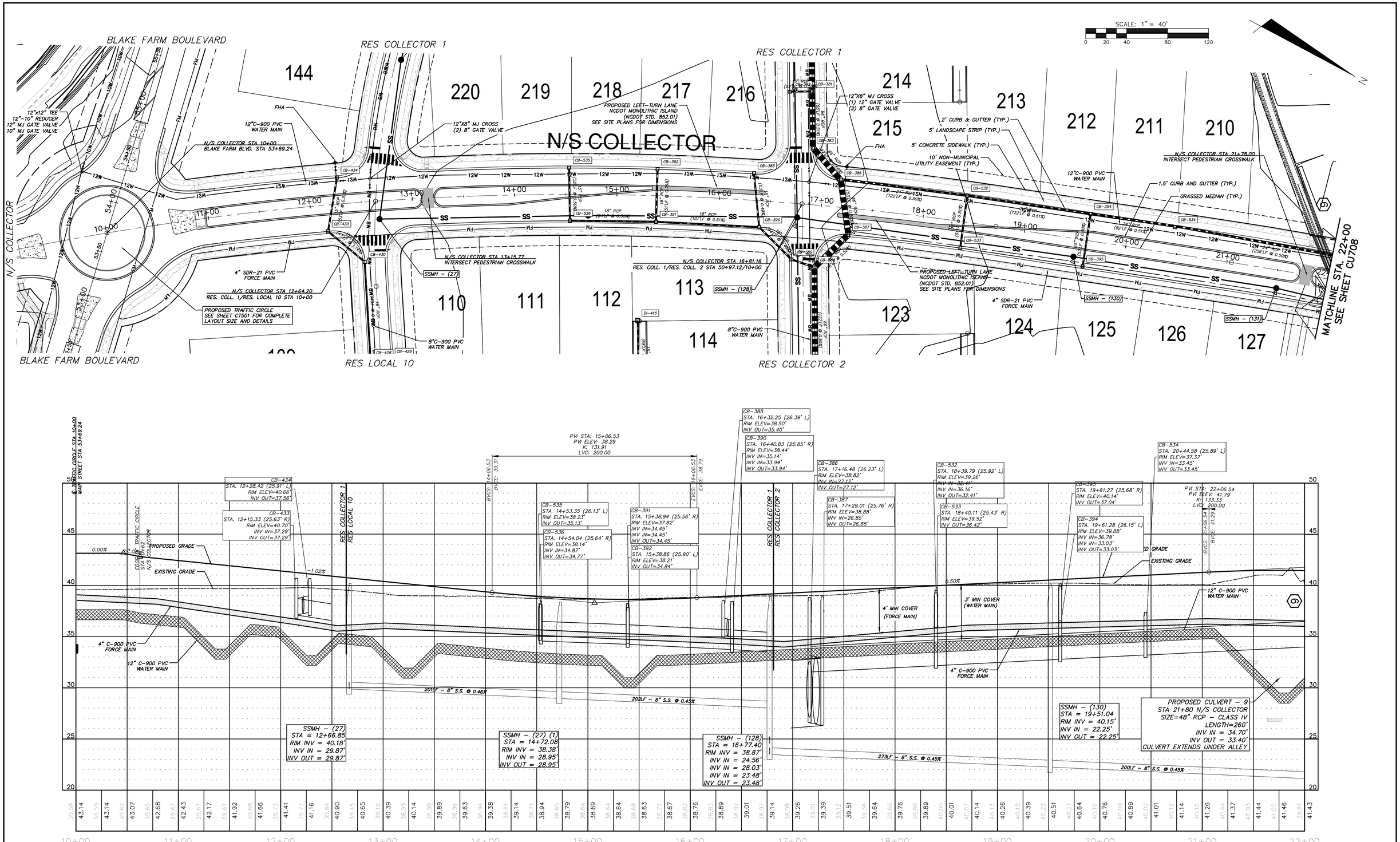

REV.NO.	DESCRIPTIONS	DATE
C	ISSUED FOR PERMITTING	01/05/15
B	PRELIMINARY PLAT PENDER CO. REVIEW	10/10/14
A	75% CONSTRUCTION DOCUMENTS TO TLC FOR REVIEW	08/11/14

REVISIONS

PRELIMINARY- DO NOT USE FOR CONSTRUCTION

SEAL 038577 NORTH CAROLINA PROFESSIONAL ENGINEER SEAL RICHARD A. MCKIMMON

McKIM&CREED
243 North Front Street
Wilmington, North Carolina 28401
Phone: (910)343-1048, Fax: (910)251-8282
NC LIC. No. F-1222
www.mckimcreed.com

Trask Land CO INC
1202 Eastwood Road
Wilmington, NC 28403
(910) 799-8755

BLAKE FARM EST. 1946

BLAKE FARM

TOPSAIL TOWNSHIP
PENDER COUNTY NORTH CAROLINA

N/S COLLECTOR
PLAN AND PROFILE
STA 10+00 TO 22+00

DATE:	9 JANUARY 2015
MCE PROJ. #	6525-0001
DRAWN	CDN
DESIGNED	RAC
CHECKED	RAM
PROJ. MGR.	RAM

SCALE
HORIZONTAL: 1"=40'
VERTICAL: 1"=4'

M&C FILE NUMBER: CU707
DRAWING NUMBER: 29

STATUS: FINAL PLAN
NOT FOR CONSTRUCTION
REVISION: C

S:\6525\0001\Mb-Drawings\Plan Profile Sheets\CU707_065250001.dwg, 1/27/2015 5:24:36 PM, cnursey

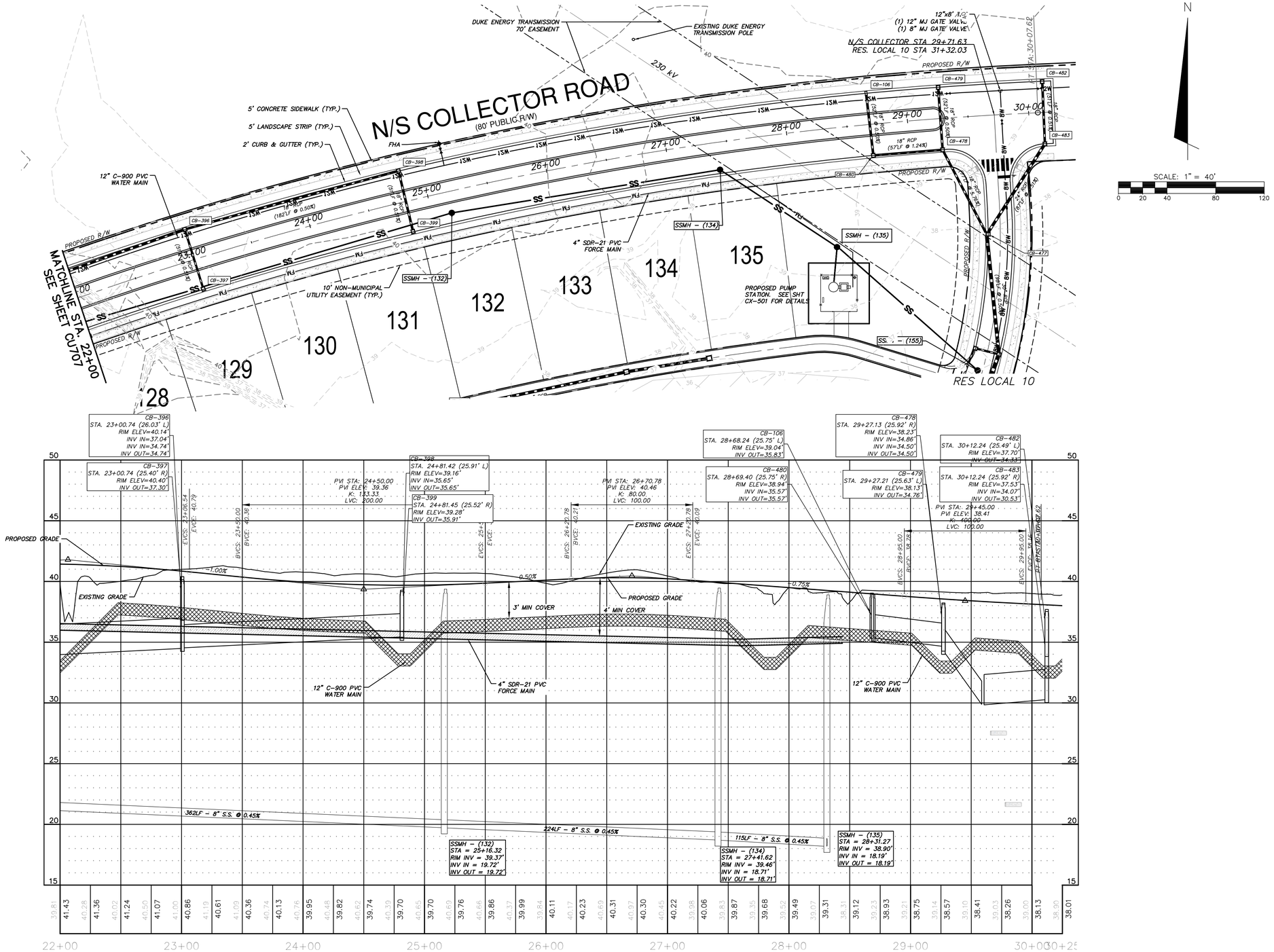

REV.NO.	DESCRIPTIONS	DATE
C	ISSUED FOR PERMITTING	01/21/15
B	PRELIMINARY PLAT PENDER CO. REVIEW	10/10/14
A	75% CONSTRUCTION DOCUMENTS TO TLC FOR REVIEW	08/11/14

REVISIONS

PRELIMINARY - DO NOT USE FOR CONSTRUCTION

SEAL

NORTH CAROLINA PROFESSIONAL SEAL 038577 ENGINEER RICHARD A. MCKIMMEN

01-21-15

McKIM & CREED
243 North Front Street
Wilmington, North Carolina 28401
Phone: (910)343-1048, Fax: (910)251-8282
NC LIC. No. F-1222
www.mckimcreed.com

Trask Land CO INC
1202 Eastwood Road
Wilmington, NC 28403
(910) 799-8755

BLAKE FARM

BLAKE FARM
TOPSAIL TOWNSHIP
PENDER COUNTY NORTH CAROLINA

N/S COLLECTOR PLAN AND PROFILE STA 22+00 TO 30+00

DATE:	9 JANUARY 2015
MCE PROJ. #	6525-0001
DRAWN	CDN
DESIGNED	RAC
CHECKED	RAM
PROJ. MGR.	RAM

SCALE
HORIZONTAL: 1"=40'
VERTICAL: 1"=4'

M&C FILE NUMBER CU708
DRAWING NUMBER 30

STATUS: FINAL PLAN NOT FOR CONSTRUCTION
REVISION C

S:\6525\0001\90-Drawings\Plan Profile Sheets\CU708_065250001.dwg, 1/27/2015 5:29:23 PM, cnursey

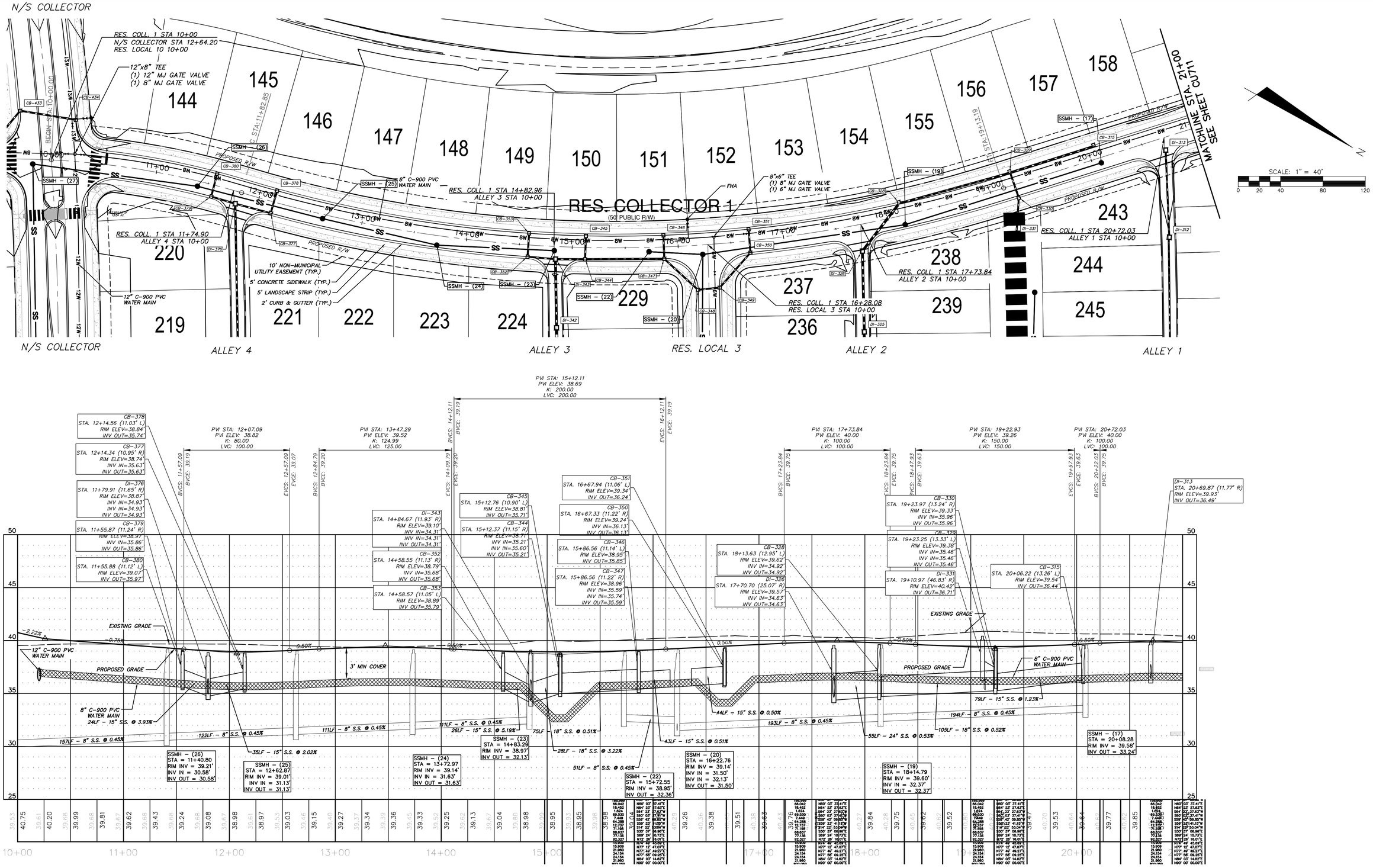

REV.NO.	DESCRIPTIONS	DATE
C	ISSUED FOR PERMITTING	01/21/15
B	PRELIMINARY PLAT PENDER CO. REVIEW	10/10/14
A	75% CONSTRUCTION DOCUMENTS TO TLC FOR REVIEW	08/11/14

REVISIONS

SEAL

PRELIMINARY - DO NOT USE FOR CONSTRUCTION

SEAL

RICHARD A. MCGEEN
PROFESSIONAL ENGINEER
SEAL 038577
NORTH CAROLINA

01-21-15

McKIM&CREED
243 North Front Street
Wilmington, North Carolina 28401
Phone: (910)343-1048, Fax: (910)251-8282

NC LIC. No. F-1222
www.mckimcreed.com

Trask Land CO INC
1202 Eastwood Road
Wilmington, NC 28403
(910) 799-8755

BLAKE FARM
EST. 1996

BLAKE FARM

TOPSAIL TOWNSHIP
PENDER COUNTY NORTH CAROLINA

RESIDENTIAL COLLECTOR - 1
PLAN AND PROFILE
STA 10+00 to 21+00

DATE:	9 JANUARY 2015
MCE PROJ. #	6525-0001
DRAWN	CDN
DESIGNED	RAC
CHECKED	RAM
PROJ. MGR.	RAM

SCALE
HORIZONTAL: 1"=40'
VERTICAL: 1"=4'

M&C FILE NUMBER: CU710
DRAWING NUMBER: 32

STATUS: FINAL PLAN
NOT FOR CONSTRUCTION

REVISION: C

S:\6525\0001\98-Drawings\Plan Profile Sheets\CU710_06525\0001.dwg, 1/28/2015 11:27:51 AM, cmursey

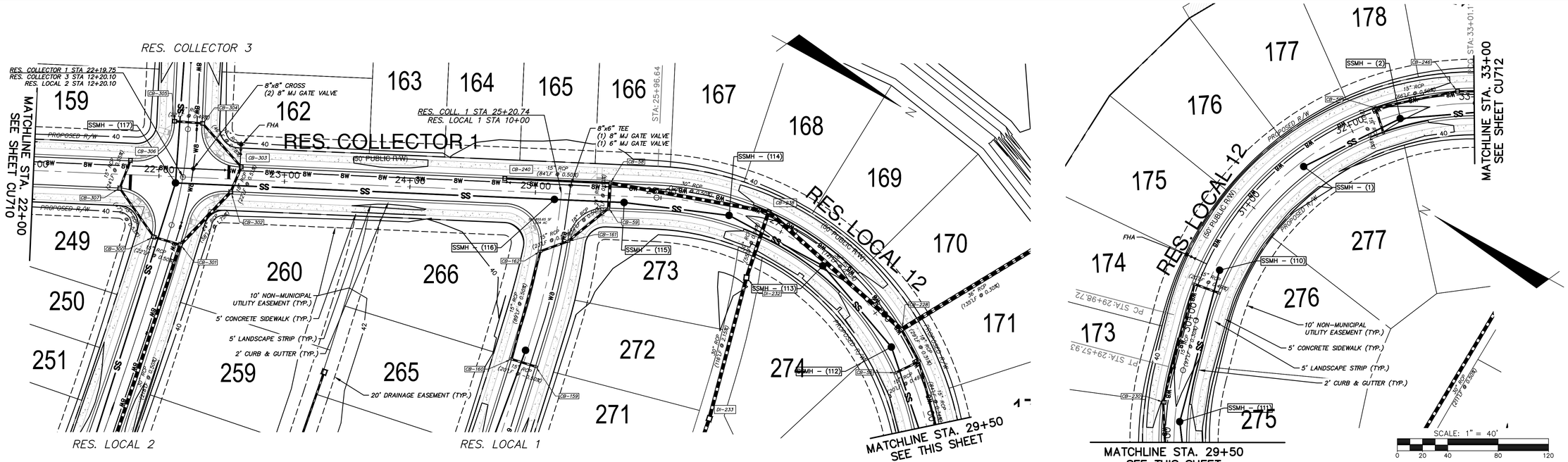

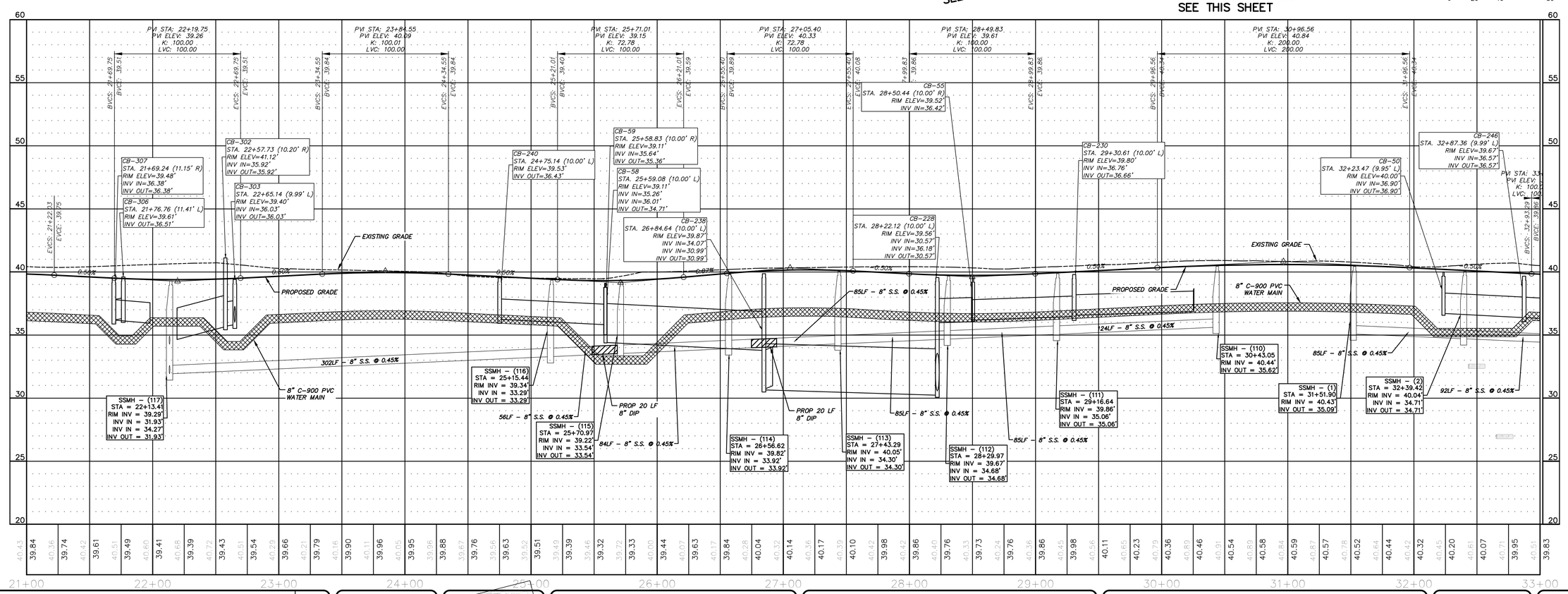

REV.NO.	DESCRIPTIONS	DATE
C	ISSUED FOR PERMITTING	01/21/15
B	PRELIMINARY PLAT PENDER CO. REVIEW	10/10/14
A	75% CONSTRUCTION DOCUMENTS TO TLC FOR REVIEW	08/11/14

REVISIONS

PRELIMINARY - DO NOT USE FOR CONSTRUCTION

SEAL
NORTH CAROLINA PROFESSIONAL SEAL 038577 ENGINEER RICHARD A. MAGEN
01-21-15

McKIM&CREED
243 North Front Street
Wilmington, North Carolina 28401
Phone: (910)343-1048, Fax: (910)251-8282
NC LIC. No. F-1222
www.mckimcreed.com

Trask Land CO INC
1202 Eastwood Road
Wilmington, NC 28403
(910) 799-8755

BLAKE FARM
EST. 1946

BLAKE FARM

TOPSAIL TOWNSHIP
PENDER COUNTY NORTH CAROLINA

RESIDENTIAL COLLECTOR 1 & LOCAL 12
PLAN AND PROFILE
STA 21+00 TO 33+00

DATE:	9 JANUARY 2015
MCE PROJ. #	6525-0001
DRAWN	CDN
DESIGNED	RAC
CHECKED	RAM
PROJ. MGR.	RAM

SCALE
HORIZONTAL: 1"=40'
VERTICAL: 1"=4'

M&C FILE NUMBER: CU711
DRAWING NUMBER: 33

STATUS: FINAL PLAN NOT FOR CONSTRUCTION
REVISION: C

S:\6525\0001\80-Drawings\Plan Profile Sheets\CU711_06525001.dwg, 1/27/2015 5:41:08 PM, cmursey

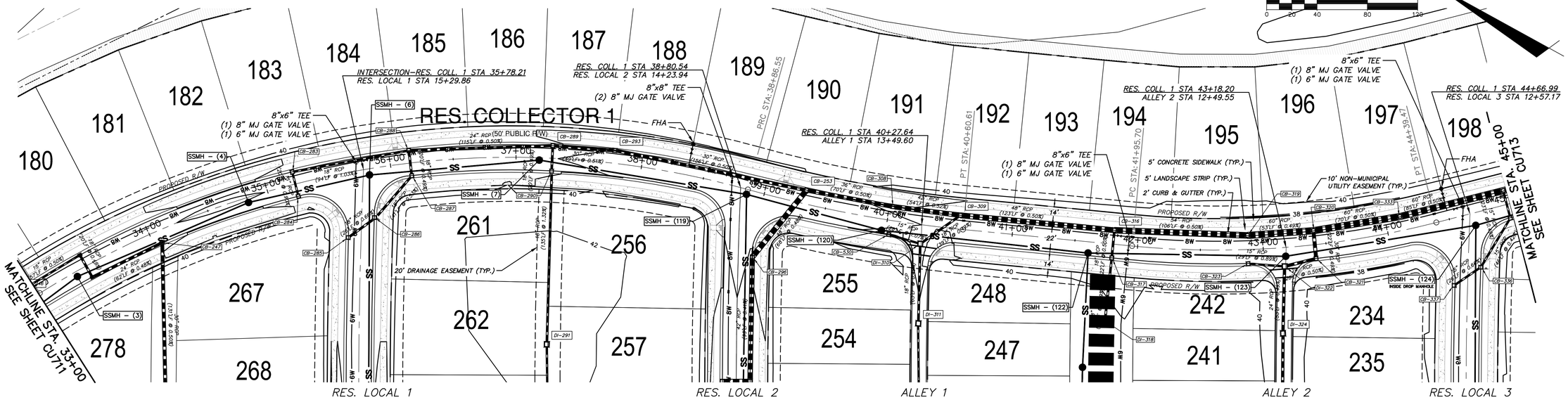

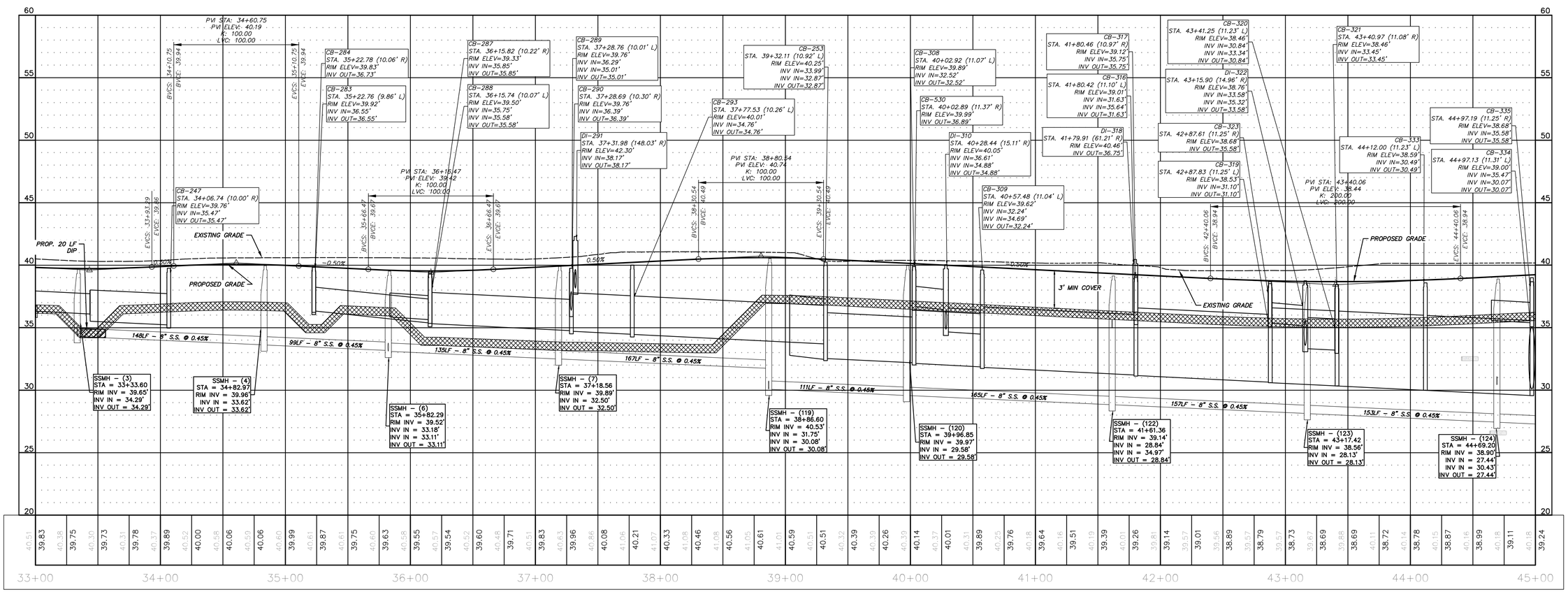

REV.NO.	DESCRIPTIONS	DATE
C	ISSUED FOR PERMITTING	01/21/15
B	PRELIMINARY PLAT PENDER CO. REVIEW	10/10/14
A	75% CONSTRUCTION DOCUMENTS TO TLC FOR REVIEW	08/11/14

REVISIONS

SEAL

PRELIMINARY- DO NOT USE FOR CONSTRUCTION

SEAL

NORTH CAROLINA PROFESSIONAL SEAL 038577 ENGINEER RICHARD A. CARLSEN

01-21-15

McKIM&CREED
243 North Front Street
Wilmington, North Carolina 28401
Phone: (910)343-1048, Fax: (910)251-8282

NC LIC. No. F-1222
www.mckimcreed.com

Trask Land CO INC
1202 Eastwood Road
Wilmington, NC 28403
(910) 799-8755

BLAKE FARM — EST 1946

BLAKE FARM

TOPSAIL TOWNSHIP
PENDER COUNTY NORTH CAROLINA

RESIDENTIAL COLLECTOR 1
PLAN AND PROFILE
STA 33+00 TO 45+00

DATE:	9 JANUARY 2015
MCE PROJ. #	6525-0001
DRAWN	CDN
DESIGNED	RAC
CHECKED	RAM
PROJ. MGR.	RAM

SCALE
HORIZONTAL: 1"=40'
VERTICAL: 1"=4'

M&C FILE NUMBER CU712

DRAWING NUMBER 34

STATUS: FINAL PLAN NOT FOR CONSTRUCTION

REVISION C

S:\6525\0001\80-Drawings\Plan Profile Sheets\CU712_06525001.dwg, 1/27/2015 5:46:18 PM, cnursey

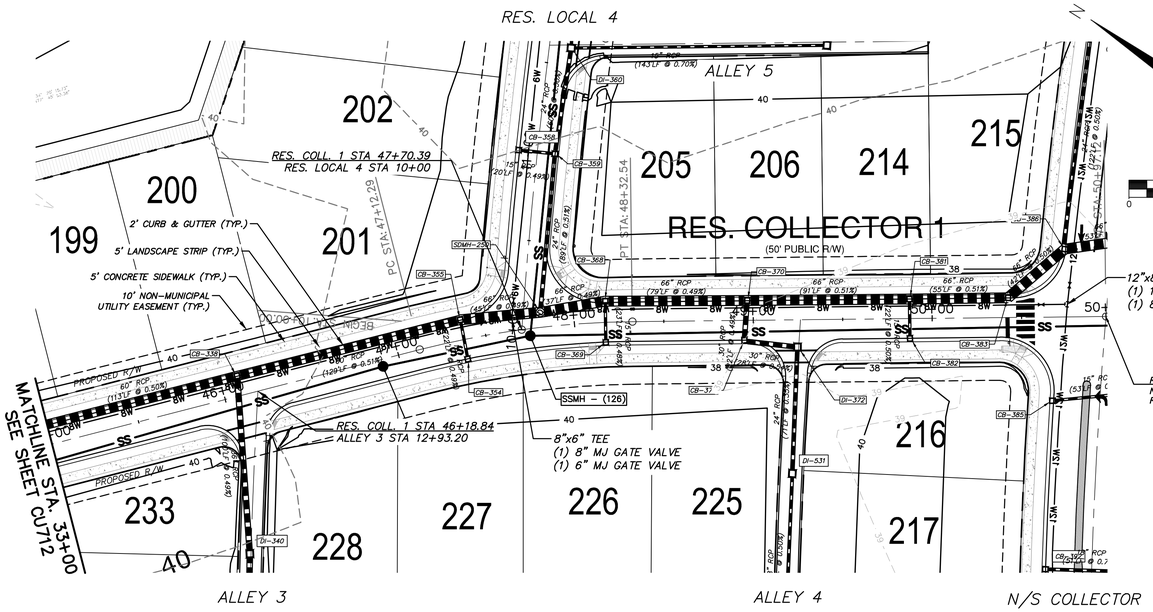

SCALE: 1" = 40'

0 20 40 80 120

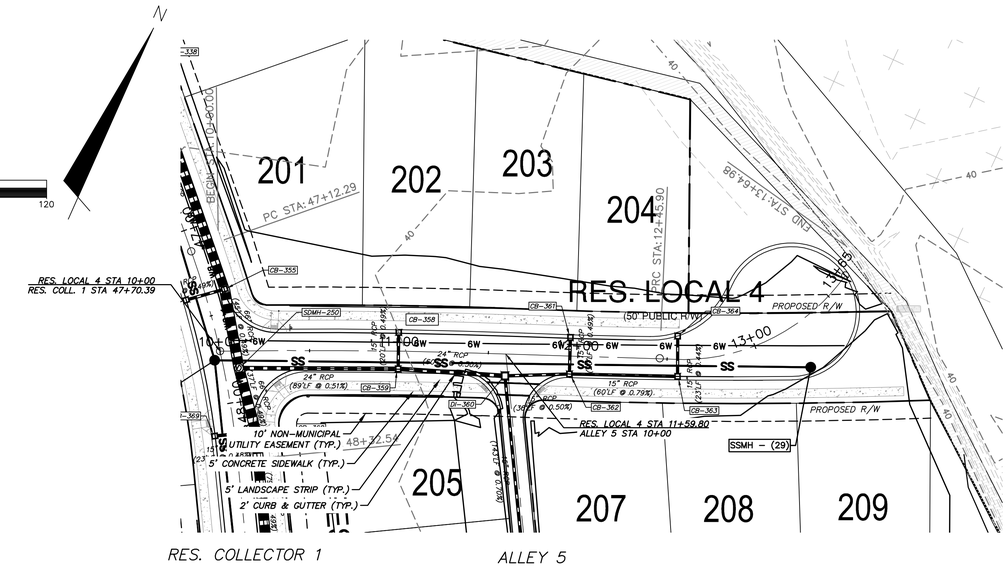

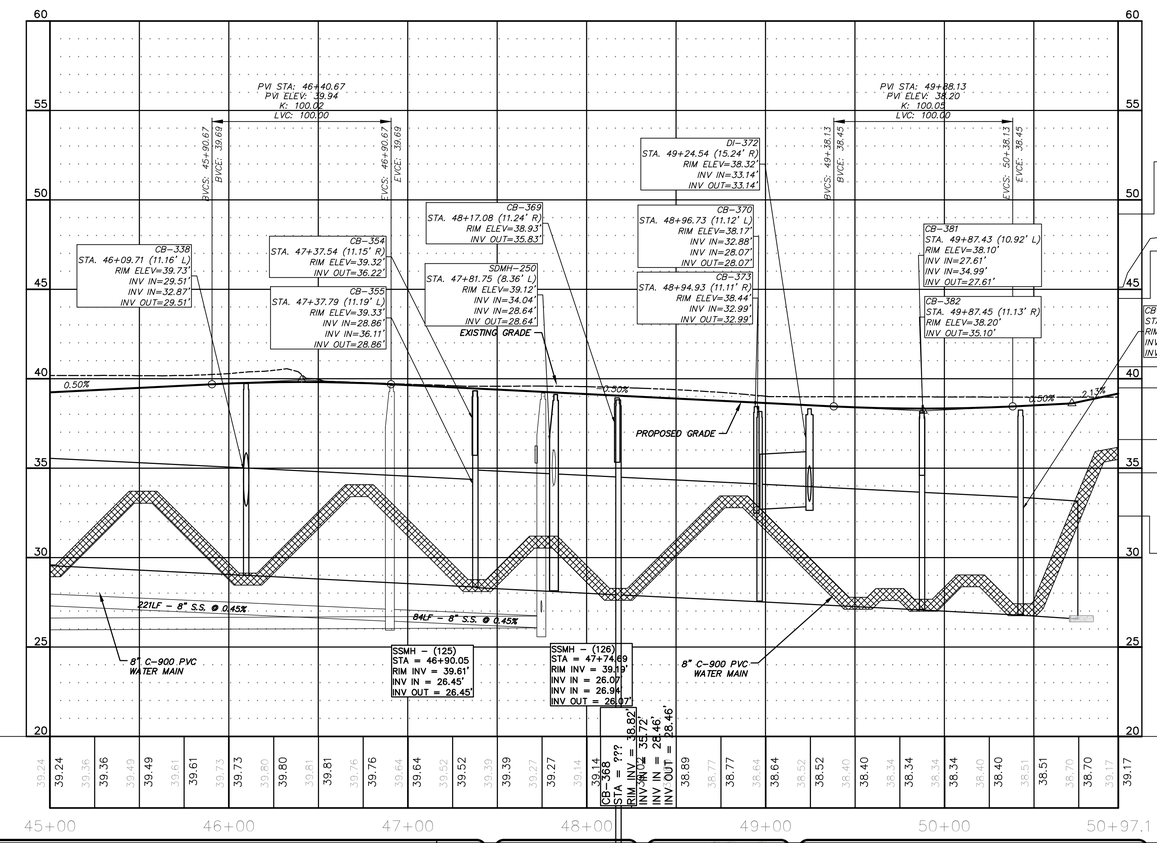

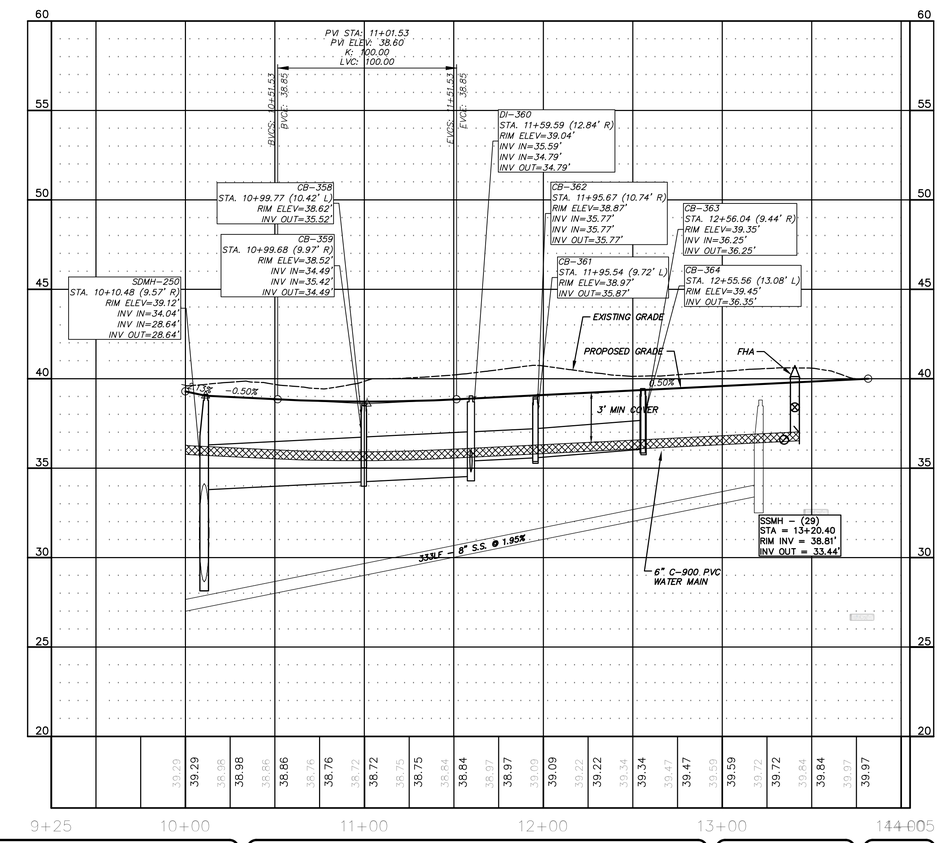

REV.NO.	DESCRIPTIONS	DATE
C	ISSUED FOR PERMITTING	01/21/15
B	PRELIMINARY PLAT PENDER CO. REVIEW	10/10/14
A	75% CONSTRUCTION DOCUMENTS TO TLC FOR REVIEW	08/11/14

REVISIONS

PRELIMINARY - DO NOT USE FOR CONSTRUCTION

SEAL 038577 ENGINEER RICHARD ALAN MAGNEN PROFESSIONAL ENGINEER NORTH CAROLINA

01-21-15

McKIM&CREED
243 North Front Street
Wilmington, North Carolina 28401
Phone: (910)343-1048, Fax: (910)251-8282
NC LIC. No. F-1222
www.mckimcreed.com

Trask Land CO INC
1202 Eastwood Road
Wilmington, NC 28403
(910) 799-8755

BLAKE FARM – EST. 1946

BLAKE FARM

TOPSAIL TOWNSHIP
PENDER COUNTY NORTH CAROLINA

RES. COLLECTOR 1, RES. LOCAL 4
PLAN AND PROFILE
STA 45+00 - 50+97 ; STA 10+00 - 14+05

DATE:	9 JANUARY 2015
MCE PROJ. #	6525-0001
DRAWN	CDN
DESIGNED	RAC
CHECKED	RAM
PROJ. MGR.	RAM

SCALE
HORIZONTAL: 1"=40'
VERTICAL: 1"=4'

M&C FILE NUMBER: CU713
DRAWING NUMBER: 35

STATUS: FINAL PLAN NOT FOR CONSTRUCTION
REVISION: C

S:\6525\0001\80-Drawings\Plan Profile Sheets\CU713_06525000 1.dwg, 1/27/2015 5:53:22 PM, cmursey

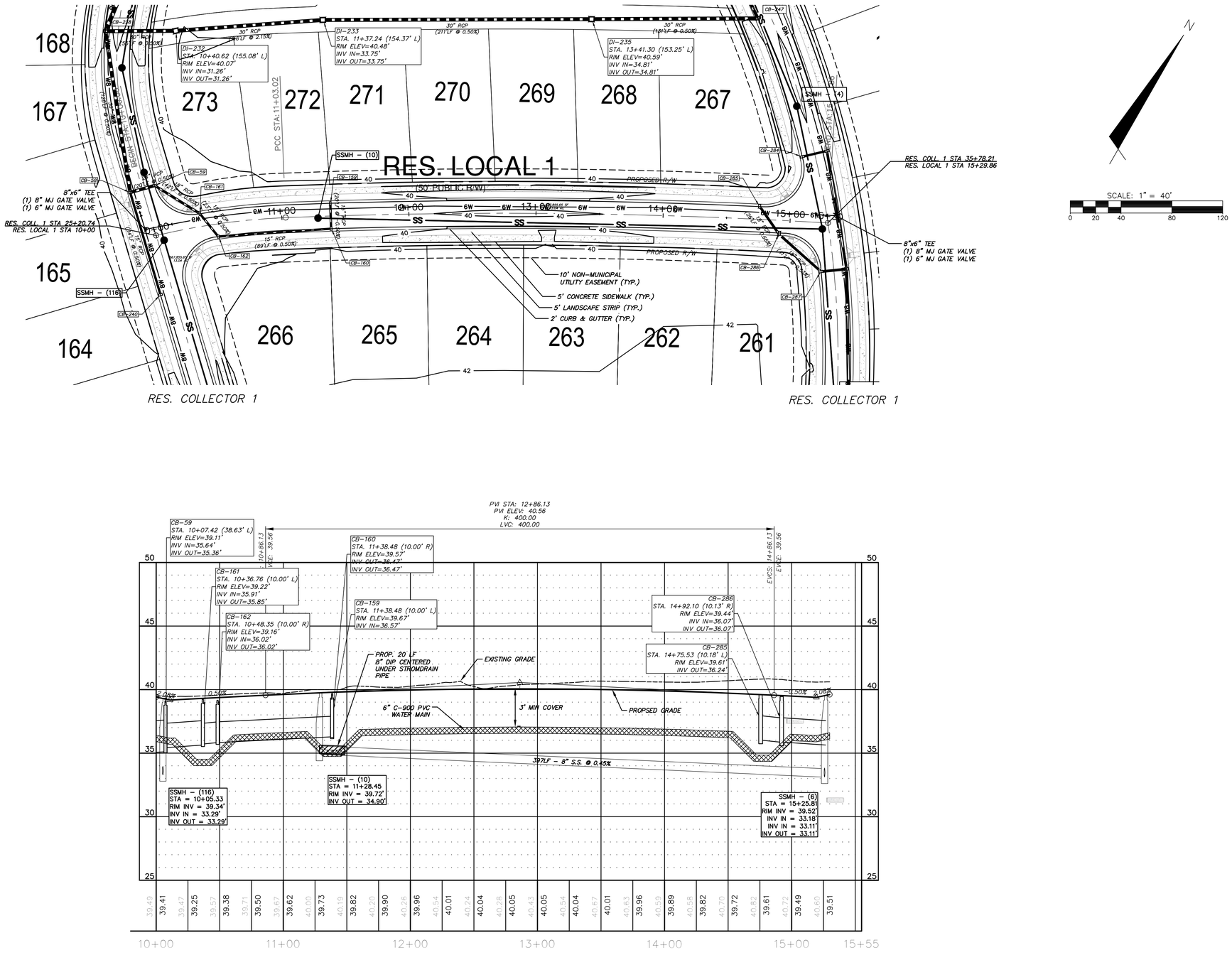

REV.NO.	DESCRIPTIONS	DATE
C	ISSUED FOR PERMITTING	01/21/15
B	PRELIMINARY PLAT PENDER CO. REVIEW	10/10/14
A	75% CONSTRUCTION DOCUMENTS TO TLC FOR REVIEW	08/11/14

REVISIONS

PRELIMINARY - DO NOT USE FOR CONSTRUCTION

SEAL

NORTH CAROLINA PROFESSIONAL SEAL 038577 ENGINEER RICHARD A. MEHLMAN

01-21-15

McKIM & CREED
243 North Front Street
Wilmington, North Carolina 28401
Phone: (910)343-1048, Fax: (910)251-8282
NC LIC. No. F-1222
www.mckimcreed.com

Trask Land CO INC
1202 Eastwood Road
Wilmington, NC 28403
(910) 799-8755

BLAKE FARM

BLAKE FARM
TOPSAIL TOWNSHIP
PENDER COUNTY NORTH CAROLINA

RESIDENTIAL LOCAL 1
PLAN AND PROFILE
STA 10+00 TO 15+29.86

DATE:	9 JANUARY 2015
MCE PROJ. #	6525-0001
DRAWN	CDN
DESIGNED	RAC
CHECKED	RAM
PROJ. MGR.	RAM

SCALE
HORIZONTAL: 1"=40'
VERTICAL: 1"=4'

M&C FILE NUMBER: CU714
DRAWING NUMBER: 36

STATUS: FINAL PLAN NOT FOR CONSTRUCTION
REVISION: C

S:\6525\0001\90-Drawings\Plan Profile Sheets\CU714_06525001.dwg, 1/27/2015 6:02:09 PM, cnursey

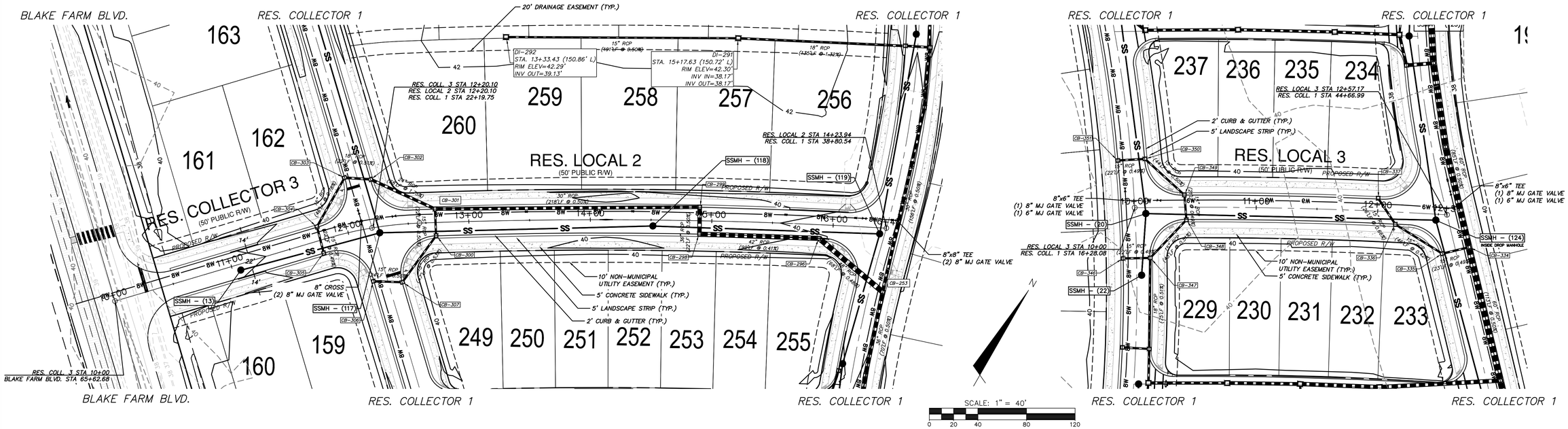

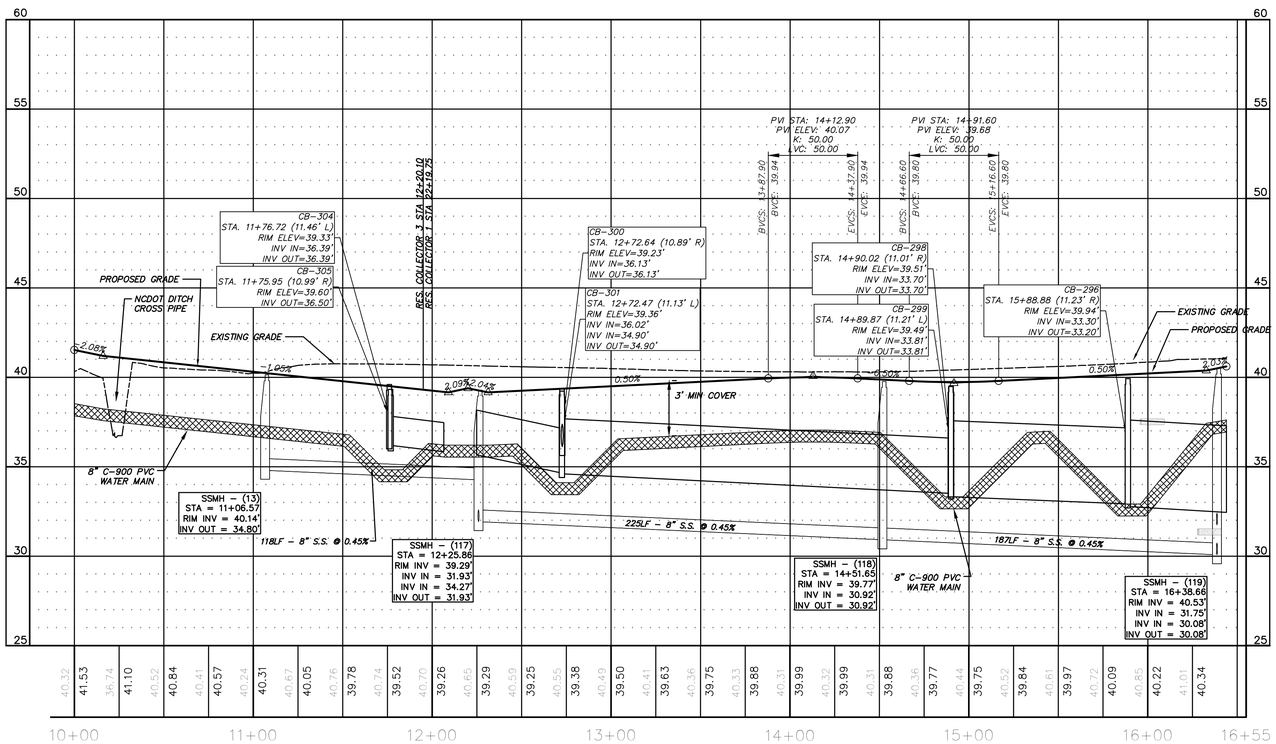

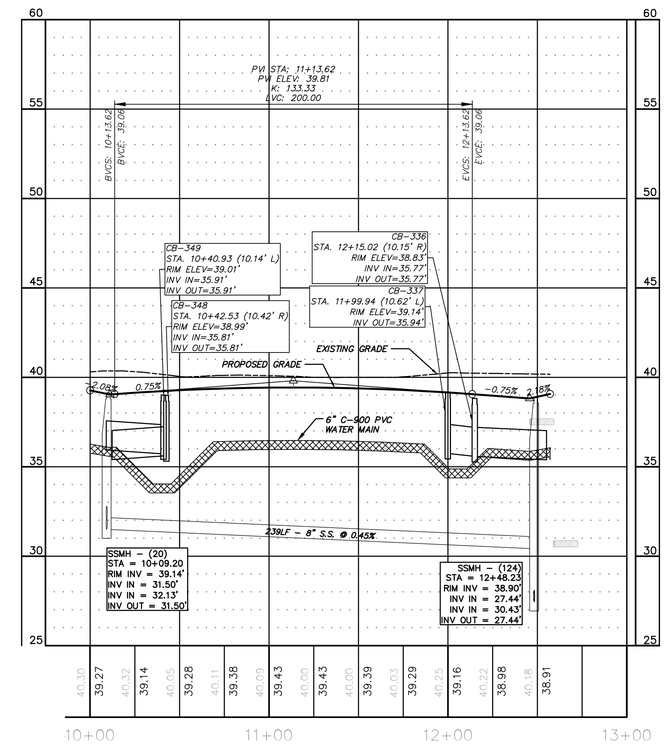

REV.NO.	DESCRIPTIONS	DATE
C	ISSUED FOR PERMITTING	01/21/15
B	PRELIMINARY PLAT PENDER CO. REVIEW	10/10/14
A	75% CONSTRUCTION DOCUMENTS TO TLC FOR REVIEW	08/11/14

REVISIONS

SEAL

PRELIMINARY - DO NOT USE FOR CONSTRUCTION

SEAL

NORTH CAROLINA PROFESSIONAL SEAL 038577 ENGINEER RICHARD A. MCKIM

01-21-15

McKIM&CREED
243 North Front Street
Wilmington, North Carolina 28401
Phone: (910)343-1048, Fax: (910)251-8282

NC LIC. No. F-1222
www.mckimcreed.com

Trask Land CO INC
1202 Eastwood Road
Wilmington, NC 28403
(910) 799-8755

BLAKE FARM
EST. 1946

BLAKE FARM

TOPSAIL TOWNSHIP
PENDER COUNTY NORTH CAROLINA

RES. COLL. 3, & RES. LOCALS 2 & 3
PLAN AND PROFILE
STA 10+00 TO 16+43.91 AND 10+00 TO 12+57.17

DATE:	9 JANUARY 2015
MCE PROJ. #	6525-0001
DRAWN	CDN
DESIGNED	RAC
CHECKED	RAM
PROJ. MGR.	RAM

SCALE
HORIZONTAL: 1"=40'
VERTICAL: 1"=4'

M&C FILE NUMBER: CU715
DRAWING NUMBER: 37

STATUS: FINAL PLAN
NOT FOR CONSTRUCTION
REVISION: C

S:\6525\0001\80-Drawings\Plan Profile Sheets\CU715_06525000l.dwg, 1/27/2015 6:09:05 PM, courtesy

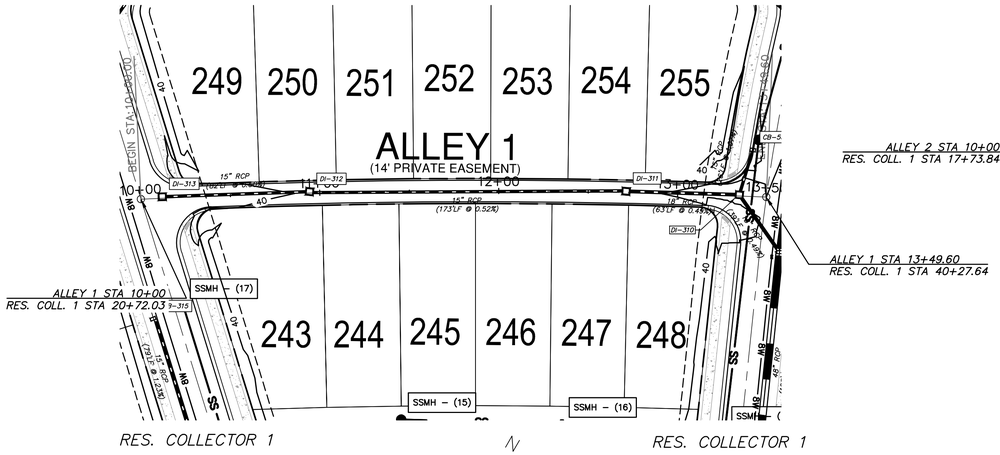

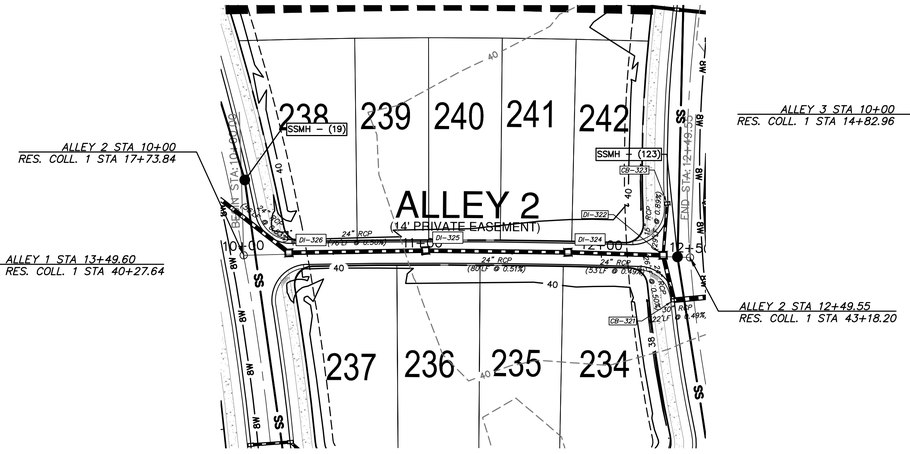

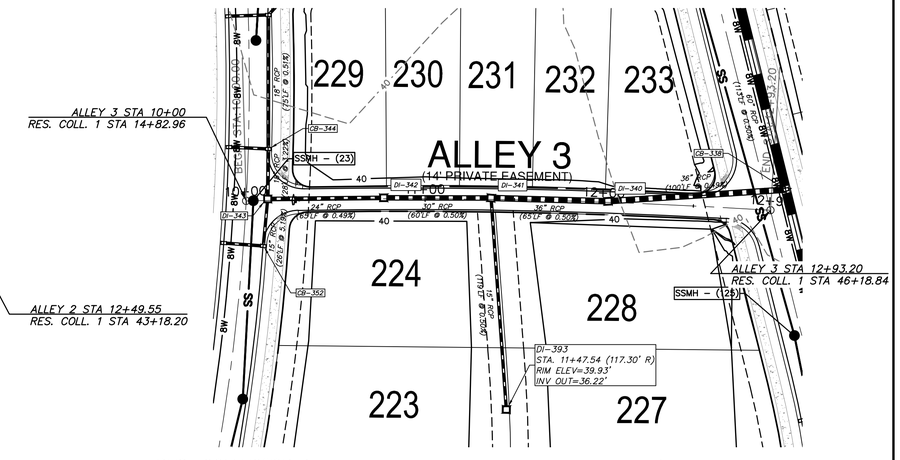

SCALE: 1" = 40'
0 20 40 80 120

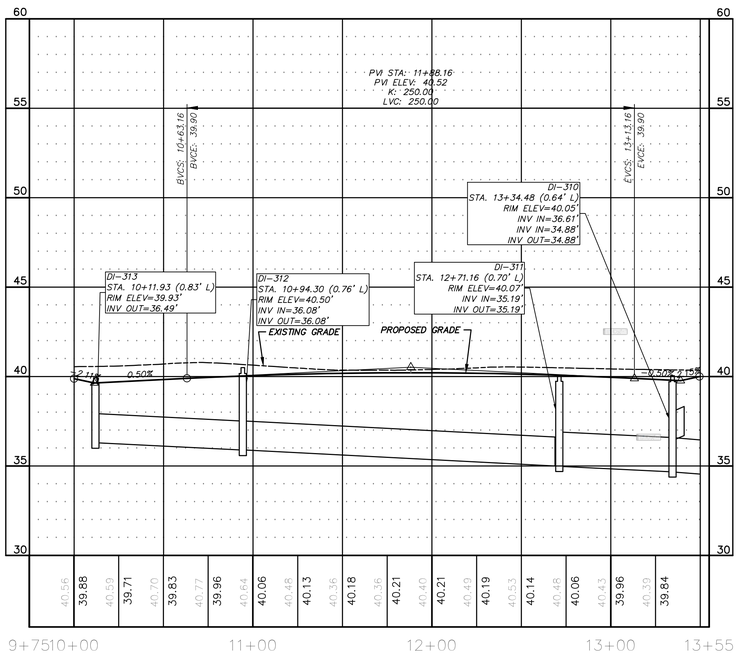

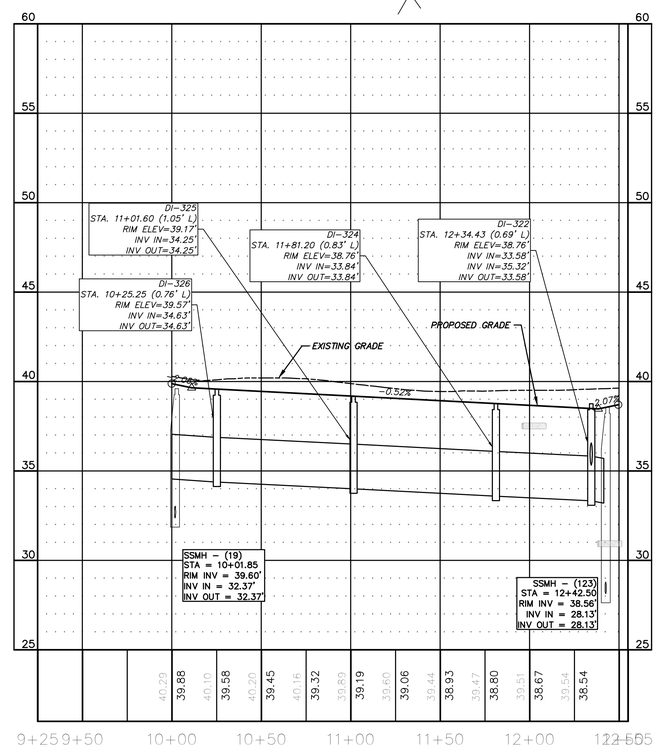

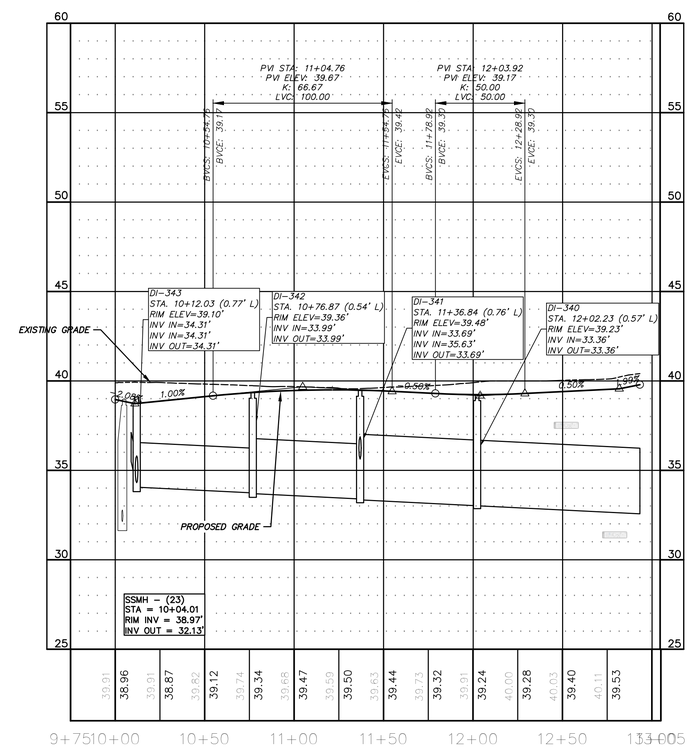

REV.NO.	DESCRIPTIONS	DATE
C	ISSUED FOR PERMITTING	01/21/15
B	PRELIMINARY PLAT PENDER CO. REVIEW	10/10/14
A	75% CONSTRUCTION DOCUMENTS TO T.C FOR REVIEW	08/11/14

REVISIONS

PRELIMINARY - DO NOT USE FOR CONSTRUCTION

SEAL

NORTH CAROLINA PROFESSIONAL SEAL 038577 ENGINEER RICHARD A. MCCLAMMEN

01-21-15

McKIM&CREED
243 North Front Street
Wilmington, North Carolina 28401
Phone: (910)343-1048, Fax: (910)251-8282
NC LIC. No. F-1222
www.mckimcreed.com

Trask Land CO INC
1202 Eastwood Road
Wilmington, NC 28403
(910) 799-8755
BLAKE FARM

BLAKE FARM

TOPSAIL TOWNSHIP
PENDER COUNTY NORTH CAROLINA

ALLEYS 1, 2 & 3
PLAN AND PROFILE

DATE:	9 JANUARY 2015
MCE PROJ. #	6525-0001
DRAWN	CDN
DESIGNED	RAC
CHECKED	RAM
PROJ. MGR.	RAM

SCALE
HORIZONTAL: 1"=40'
VERTICAL: 1"=4'

M&C FILE NUMBER: CU716
DRAWING NUMBER: 38

STATUS: FINAL PLAN NOT FOR CONSTRUCTION
REVISION: C

S:\6525\0001\80-Drawings\Plan Profile Sheets\CU716_06525D001.dwg, 1/27/2015 6:20:29 PM, cmursey

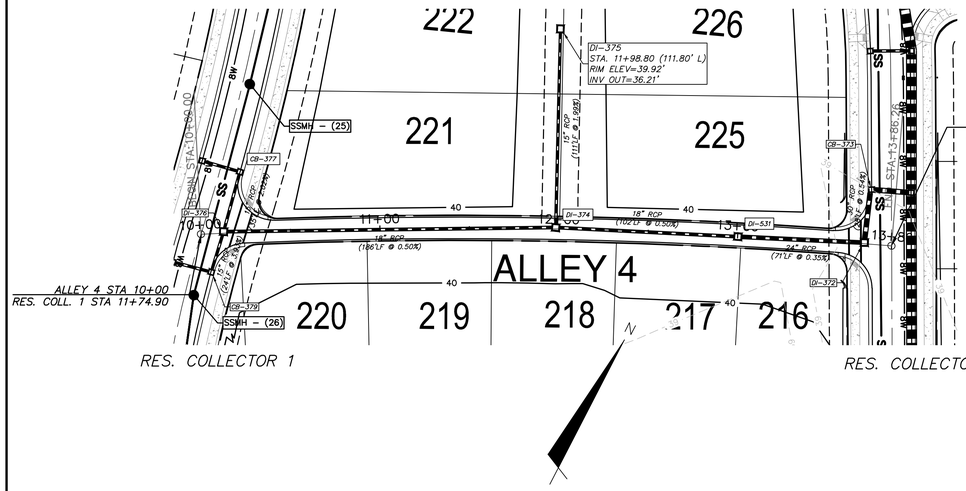

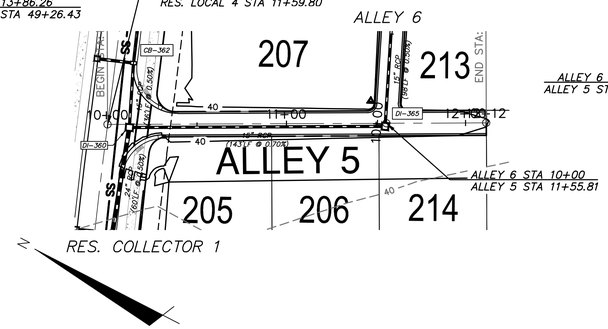

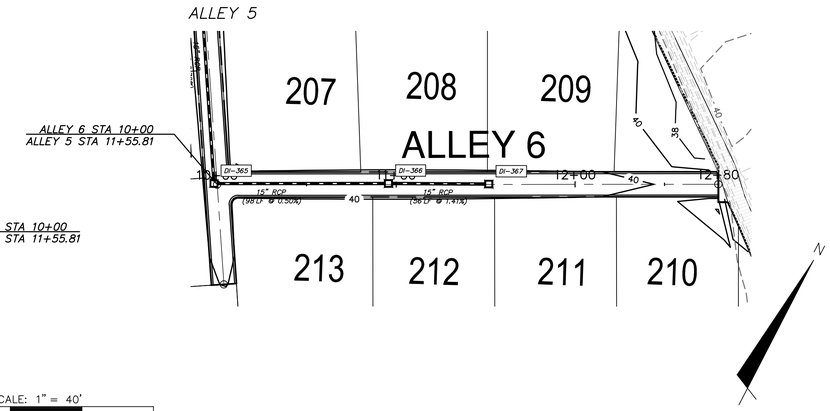

SCALE: 1" = 40'

0 20 40 80 120

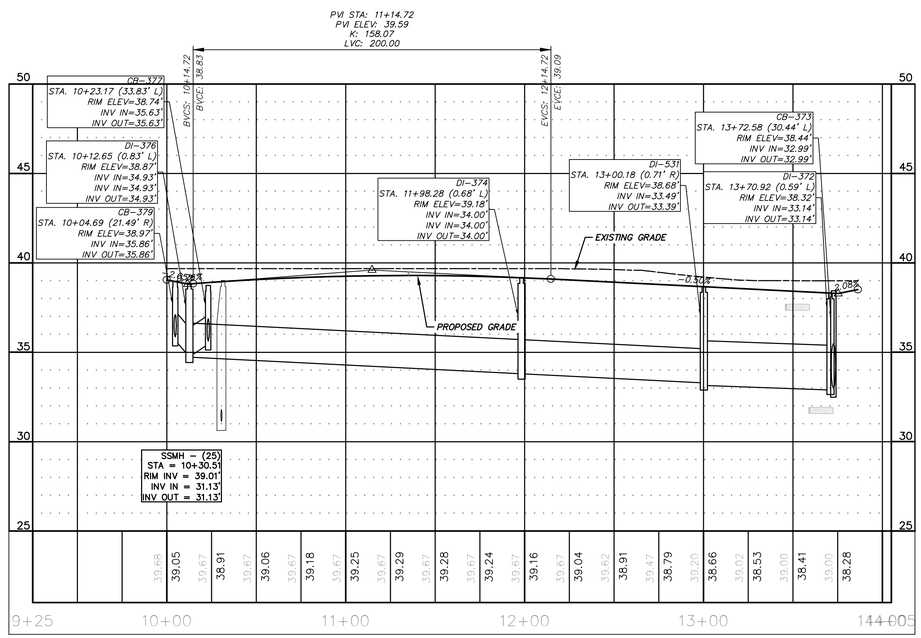

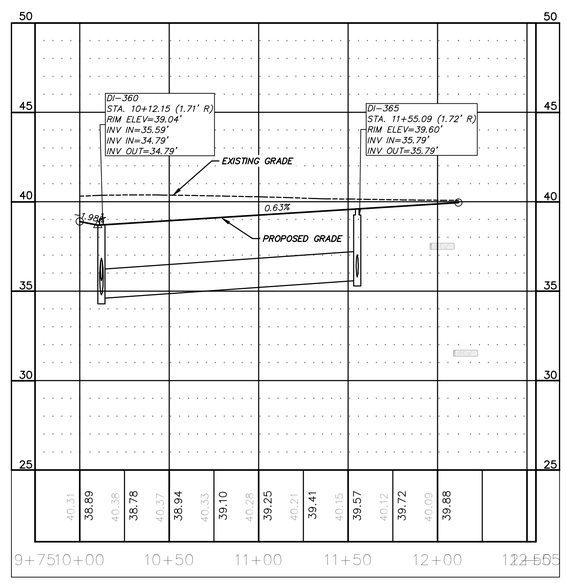

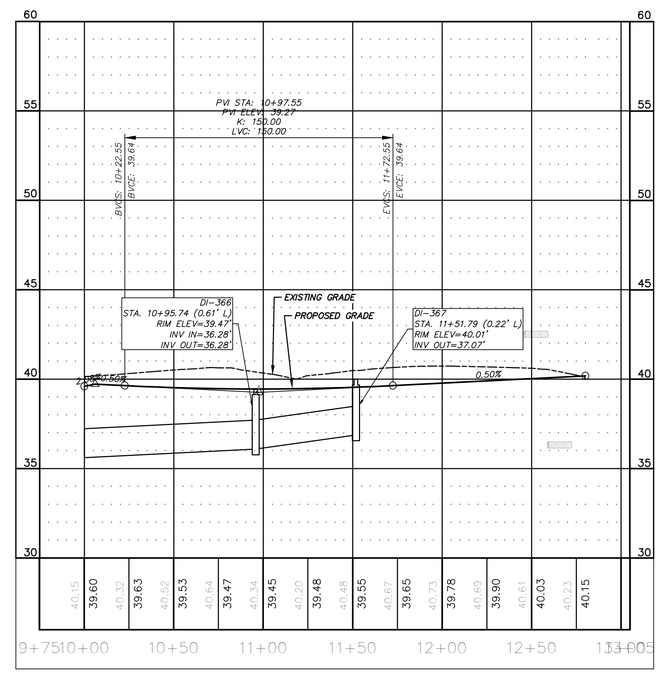

REV.NO.	DESCRIPTIONS	DATE
C	ISSUED FOR PERMITTING	01/21/15
B	PRELIMINARY PLAT PENDER CO. REVIEW	10/10/14
A	75% CONSTRUCTION DOCUMENTS TO TLC FOR REVIEW	08/11/14

REVISIONS

SEAL

PRELIMINARY - DO NOT USE FOR CONSTRUCTION

SEAL

NORTH CAROLINA PROFESSIONAL SEAL 038577 ENGINEER RICHARD ALLEN MCCANN

01-21-15

McKIM&CREED
243 North Front Street
Wilmington, North Carolina 28401
Phone: (910)343-1048, Fax: (910)251-8282

NC LIC. No. F-1222
www.mckimcreed.com

Trask Land CO INC
1202 Eastwood Road
Wilmington, NC 28403
(910) 799-8755

BLAKE FARM — EST. 1946

BLAKE FARM

TOPSAIL TOWNSHIP
PENDER COUNTY NORTH CAROLINA

ALLEYS 4, 5, & 6
PLAN AND PROFILE

DATE:	9 JANUARY 2015
MCE PROJ. #	6525-0001
DRAWN	CDN
DESIGNED	RAC
CHECKED	RAM
PROJ. MGR.	RAM

SCALE
HORIZONTAL: 1"=40'
VERTICAL: 1"=4'

M&C FILE NUMBER CU717
DRAWING NUMBER 39

STATUS: FINAL PLAN
NOT FOR CONSTRUCTION
REVISION C

S:\6525\0001\80-Drawings\Plan Profile Sheets\CU717_06525001.dwg, 1/27/2015 6:32:40 PM, cnursey

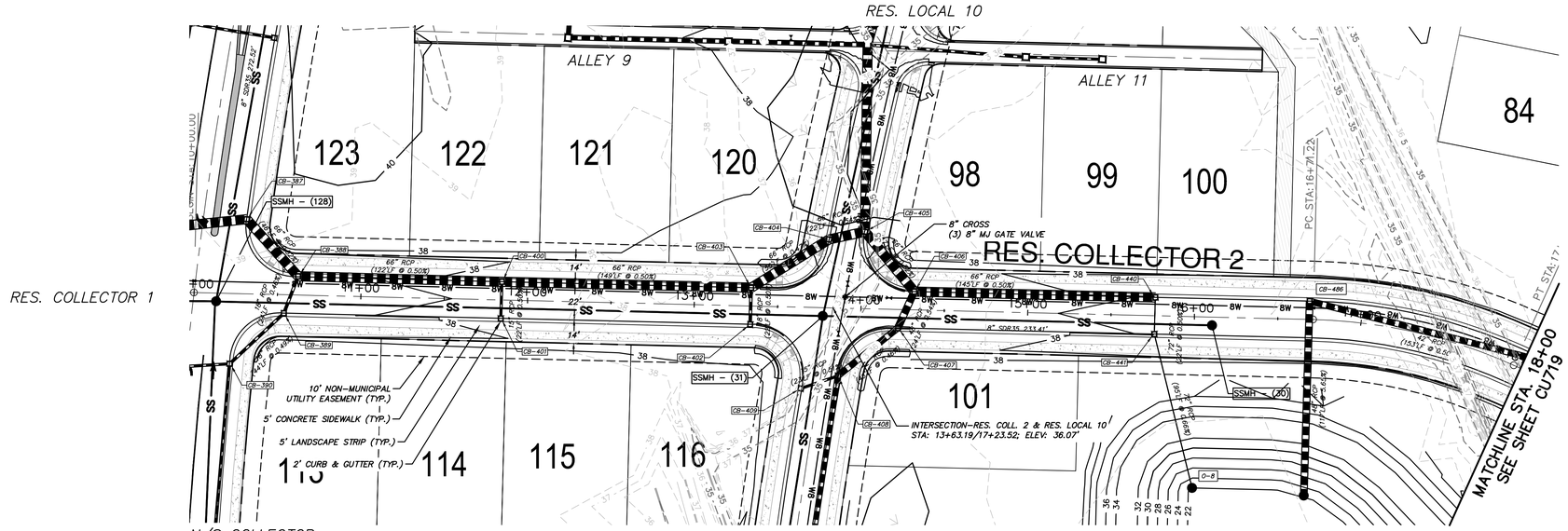

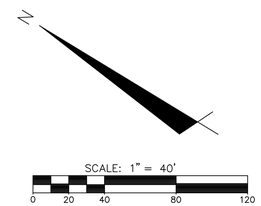

REV.NO.	DESCRIPTIONS	DATE
C	ISSUED FOR PERMITTING	01/21/15
B	PRELIMINARY PLAT PENDER CO. REVIEW	10/10/14
A	75% CONSTRUCTION DOCUMENTS TO TLC FOR REVIEW	08/15/14

REVISIONS

PRELIMINARY - DO NOT USE FOR CONSTRUCTION

SEAL

NORTH CAROLINA PROFESSIONAL ENGINEER SEAL 038577 RICHARD A. MEISSEN

01-21-15

McKIM & CREED
243 North Front Street
Wilmington, North Carolina 28401
Phone: (910)343-1048, Fax: (910)251-8282
NC LIC. No. F-1222
www.mckimcreed.com

Trask Land CO INC
1202 Eastwood Road
Wilmington, NC 28403
(910) 799-8755

BLAKE FARM

BLAKE FARM
TOPSAIL TOWNSHIP
PENDER COUNTY NORTH CAROLINA

RESIDENTIAL COLLECTOR 2
PLAN AND PROFILE
STA 10+00 TO 18+00

DATE:	9 JANUARY 2015
MCE PROJ. #	6525-0001
DRAWN	CDN
DESIGNED	RAC
CHECKED	RAM
PROJ. MGR.	RAM

SCALE
HORIZONTAL: 1"=40'
VERTICAL: 1"=4'

M&C FILE NUMBER: CU718
DRAWING NUMBER: 40

STATUS: FINAL PLAN NOT FOR CONSTRUCTION
REVISION: C

S:\6525\0001\80-Drawings\Plan Profile Sheets\CU718_065250001.dwg, 1/27/2015 6:42:16 PM, cnursey

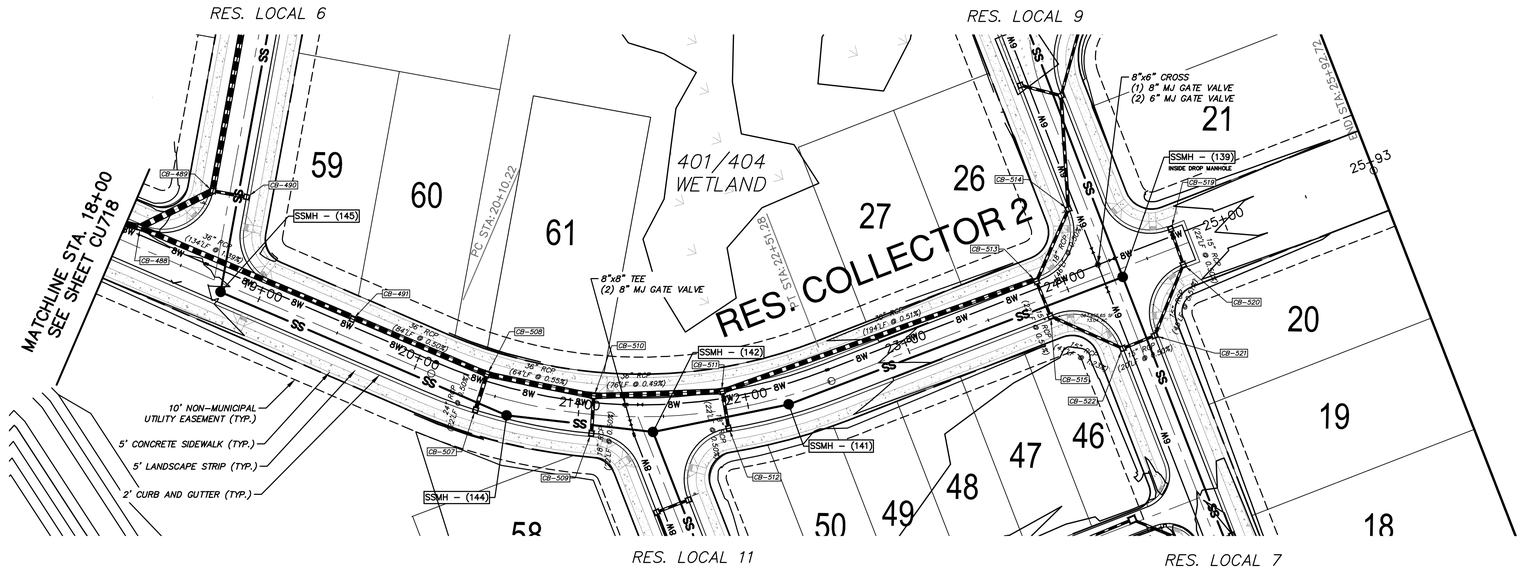

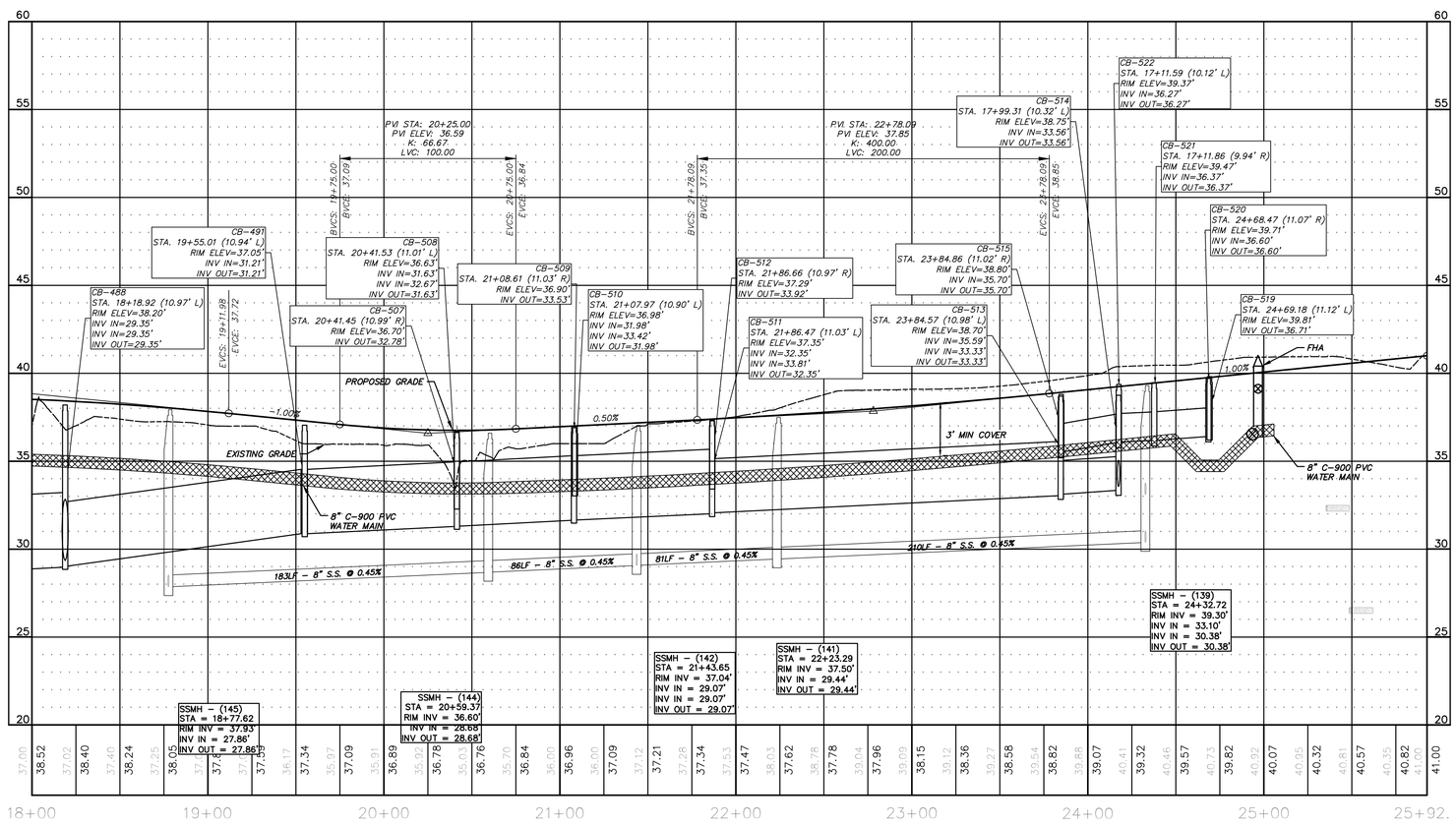

REV.NO.	DESCRIPTIONS	DATE
C	ISSUED FOR PERMITTING	01/21/15
B	PRELIMINARY PLAT PENDER CO. REVIEW	10/10/14
A	75% CONSTRUCTION DOCUMENTS TO T.C FOR REVIEW	08/11/14

REVISIONS

PRELIMINARY - DO NOT USE FOR CONSTRUCTION

SEAL

NORTH CAROLINA PROFESSIONAL SEAL 038577 ENGINEER RICHARD A. MCKIMMON

01-21-15

McKIM&CREED
243 North Front Street
Wilmington, North Carolina 28401
Phone: (910)343-1048, Fax: (910)251-8282
NC LIC. No. F-1222
www.mckimcreed.com

Trask Land CO INC
1202 Eastwood Road
Wilmington, NC 28403
(910) 799-8755

BLAKE FARM
EST. 1946

BLAKE FARM

TOPSAIL TOWNSHIP
PENDER COUNTY NORTH CAROLINA

RESIDENTIAL COLLECTOR 2
PLAN AND PROFILE
STA 18+00 TO 25+93

DATE:	9 JANUARY 2015
MCE PROJ. #	6525-0001
DRAWN	CDN
DESIGNED	RAC
CHECKED	RAM
PROJ. MGR.	RAM

SCALE
HORIZONTAL: 1"=40'
VERTICAL: 1"=4'

M&C FILE NUMBER: CU719
DRAWING NUMBER: 41

STATUS: FINAL PLAN NOT FOR CONSTRUCTION
REVISION: C

S:\6525\0001\80-Drawings\Plan Profile Sheets\CU719_06525001.dwg, 1/28/2015 11:33:22 AM, cruesey

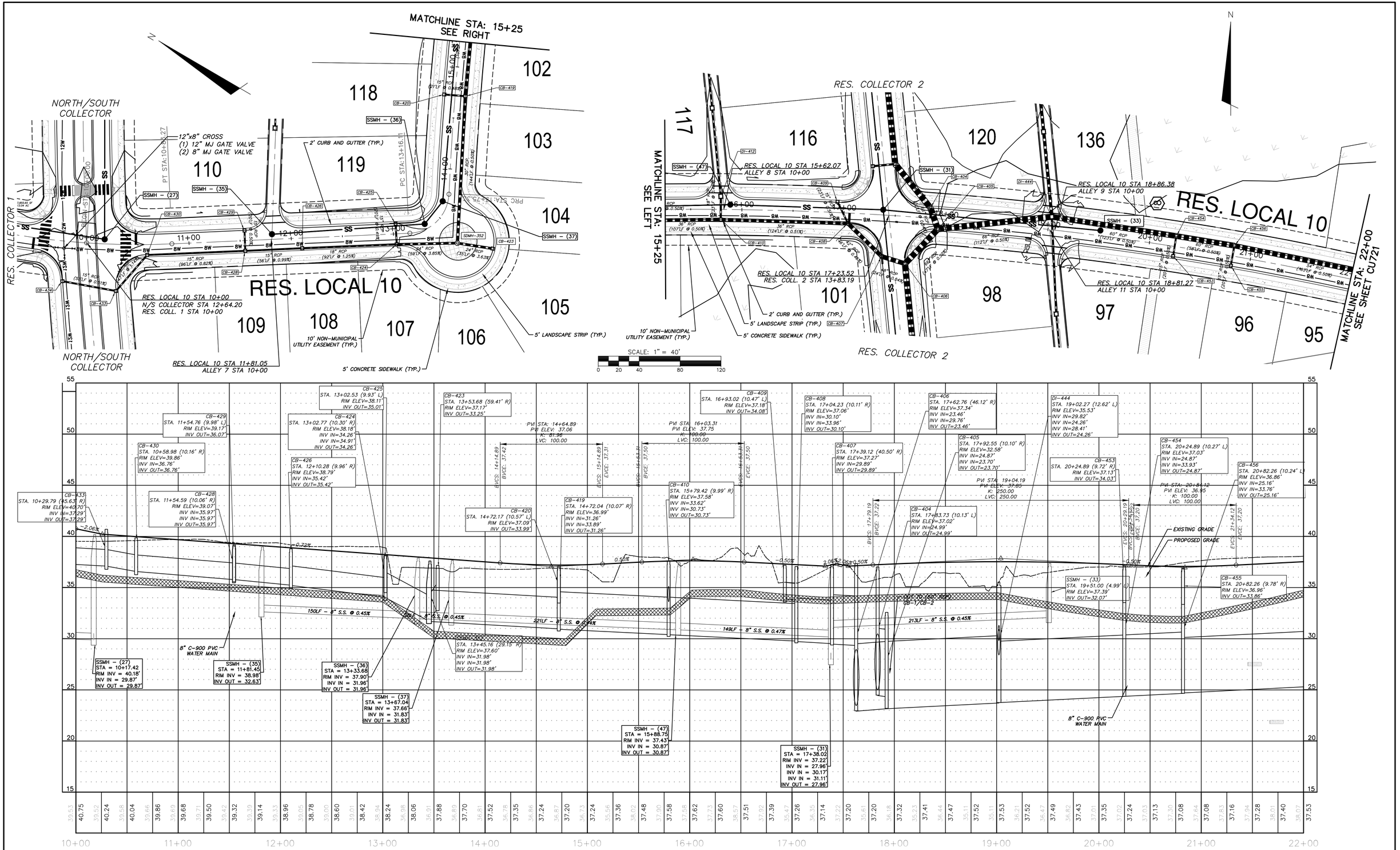

REV.NO.	DESCRIPTIONS	DATE
C	ISSUED FOR PERMITTING	01/21/15
B	PRELIMINARY PLAT PENDER CO. REVIEW	10/10/14
A	75% CONSTRUCTION DOCUMENTS TO TLC FOR REVIEW	08/11/14

REVISIONS

PRELIMINARY- DO NOT USE FOR CONSTRUCTION

SEAL

NORTH CAROLINA PROFESSIONAL SEAL 038577 ENGINEER RICHARD A. MEISSEN 01-21-15

McKIM&CREED
243 North Front Street
Wilmington, North Carolina 28401
Phone: (910)343-1048, Fax: (910)251-8282
NC LIC. No. F-1222
www.mckimcreed.com

Trask Land CO INC
1202 Eastwood Road
Wilmington, NC 28403
(910) 799-8755

BLAKE FARM

BLAKE FARM
TOPSAIL TOWNSHIP
PENDER COUNTY NORTH CAROLINA
RESIDENTIAL LOCAL 10
PLAN AND PROFILE
STA 10+00 TO 22+00

DATE:	9 JANUARY 2015
MCE PROJ. #	6525-0001
DRAWN	CDN
DESIGNED	RAC
CHECKED	RAM
PROJ. MGR.	RAM

SCALE
HORIZONTAL: 1"=40'
VERTICAL: 1"=4'

M&C FILE NUMBER CU720
DRAWING NUMBER 42

STATUS: FINAL PLAN NOT FOR CONSTRUCTION
REVISION C

S:\6525\0001\90-Drawings\Plan Profile Sheets\CU720_065250001.dwg, 1/27/2015 6:55:28 PM, cnursey

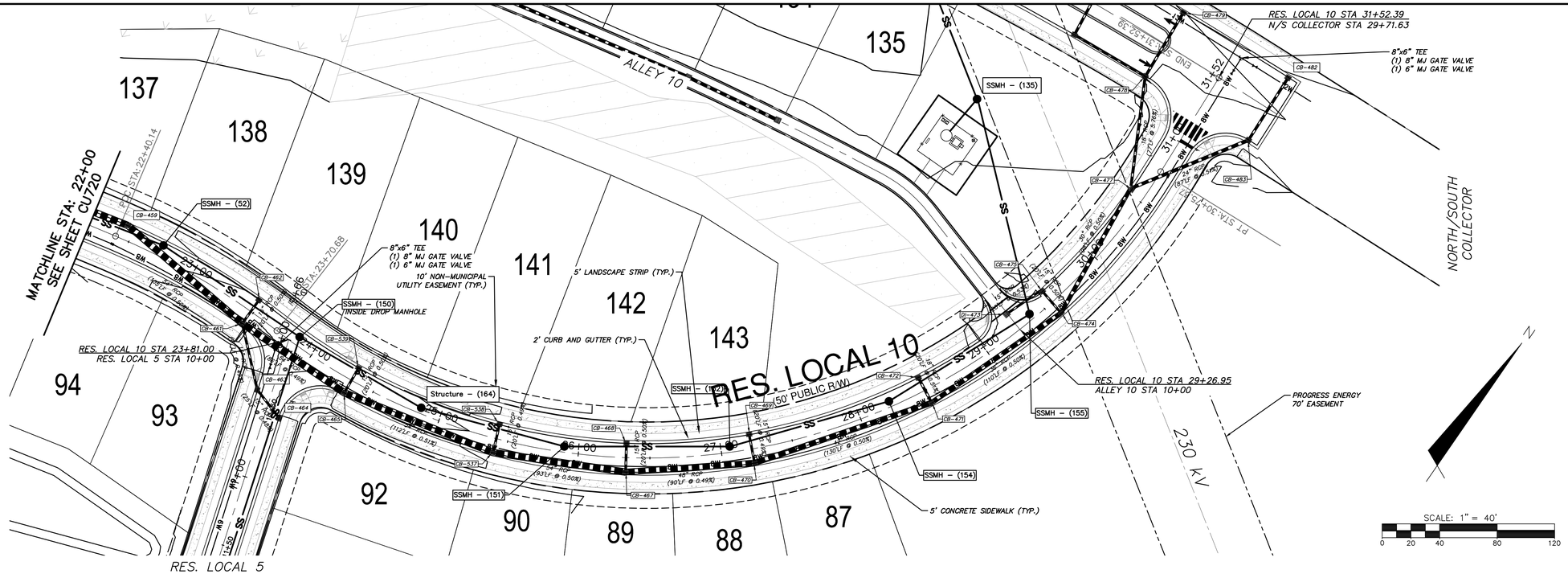

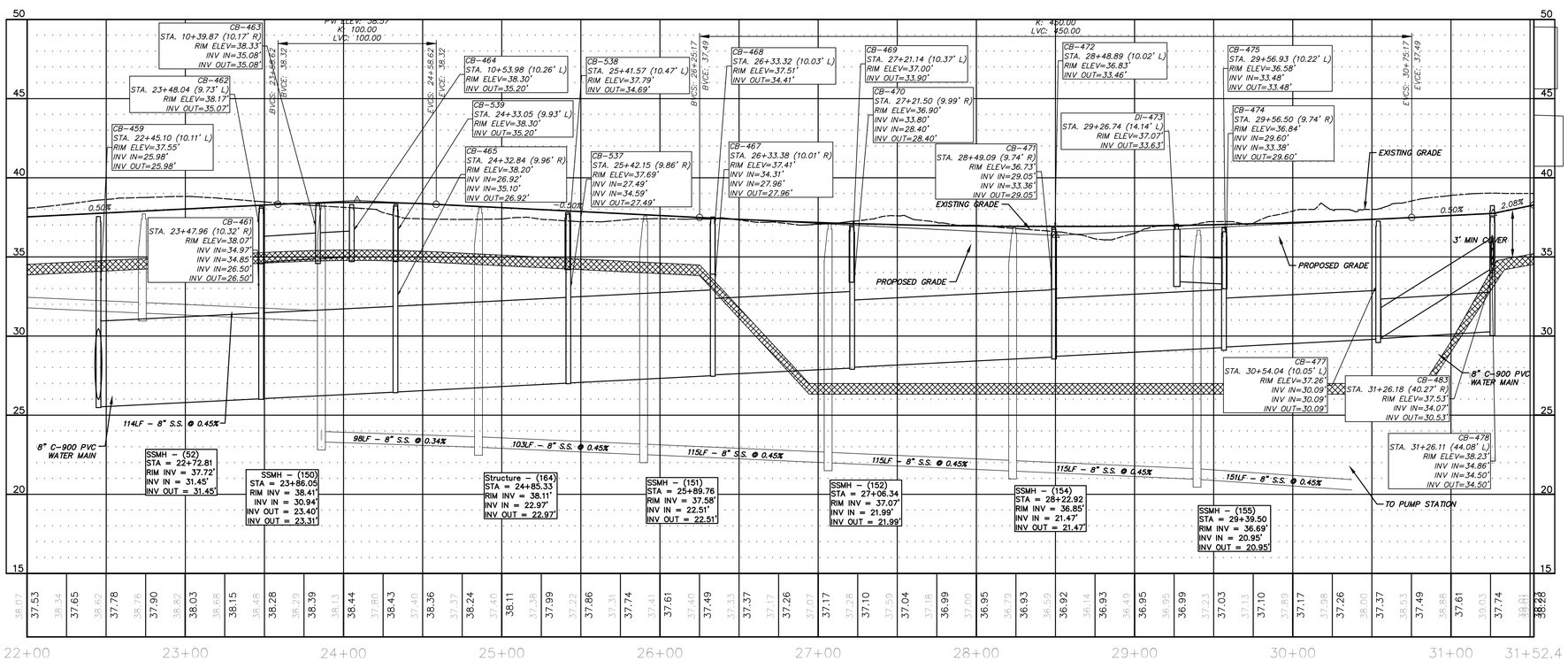

REV.NO.	DESCRIPTIONS	DATE
C	ISSUED FOR PERMITTING	01/21/15
B	PRELIMINARY PLAT PENDER CO. REVIEW	10/10/14
A	75% CONSTRUCTION DOCUMENTS TO TLC FOR REVIEW	08/11/14

REVISIONS

PRELIMINARY - DO NOT USE FOR CONSTRUCTION

SEAL

NORTH CAROLINA PROFESSIONAL SEAL 038577 ENGINEER RICHARD A. MCGEEN

01-21-15

McKIM&CREED
243 North Front Street
Wilmington, North Carolina 28401
Phone: (910)343-1048, Fax: (910)251-8282
NC LIC. No. F-1222
www.mckimcreed.com

Trask Land CO INC
1202 Eastwood Road
Wilmington, NC 28403
(910) 799-8755

BLAKE FARM
EST. 1946

BLAKE FARM
TOPSAIL TOWNSHIP
PENDER COUNTY NORTH CAROLINA

RESIDENTIAL LOCAL 10
PLAN AND PROFILE
STA 22+00 TO 31+52.39

DATE:	9 JANUARY 2015
MCE PROJ. #	6525-0001
DRAWN	CDN
DESIGNED	RAC
CHECKED	RAM
PROJ. MGR.	RAM

SCALE
HORIZONTAL: 1"=40'
VERTICAL: 1"=4'

M&C FILE NUMBER CU721
DRAWING NUMBER 43

STATUS: FINAL PLAN
NOT FOR CONSTRUCTION
REVISION C

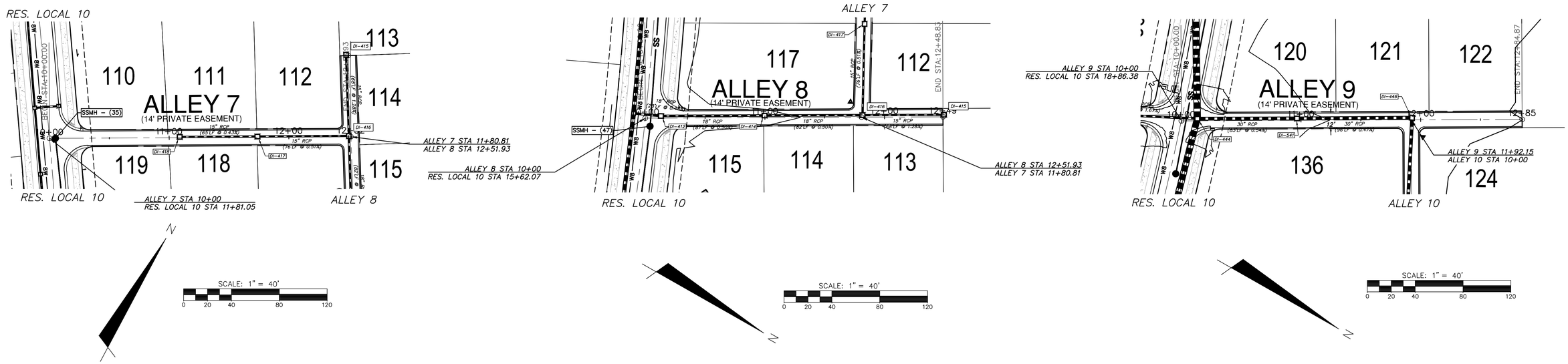

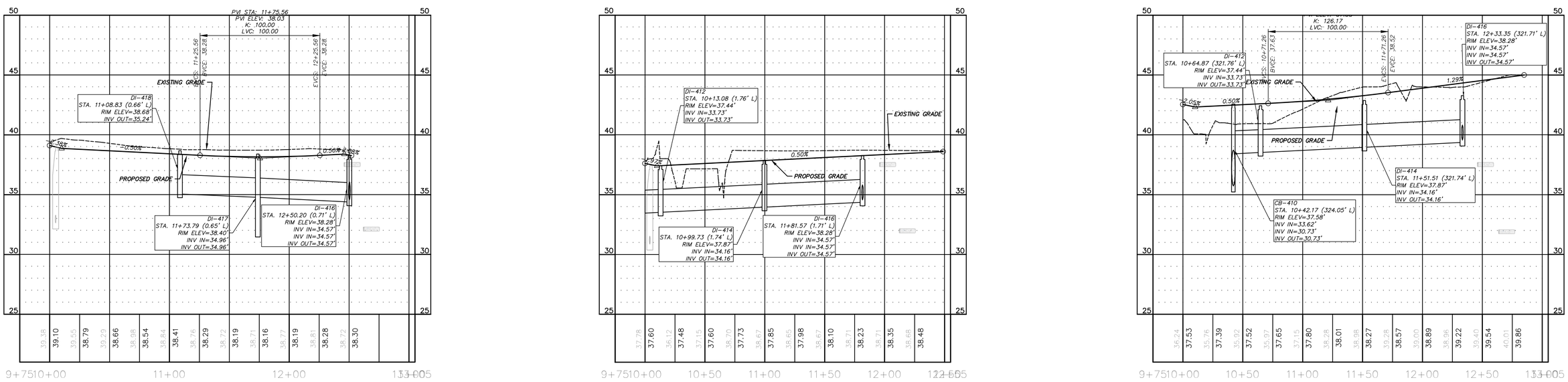

REV.NO.	DESCRIPTIONS	DATE
C	ISSUED FOR PERMITTING	01/21/15
B	PRELIMINARY PLAT PENDER CO. REVIEW	10/10/14
A	75% CONSTRUCTION DOCUMENTS TO TLC FOR REVIEW	08/11/14

REVISIONS

PRELIMINARY - DO NOT USE FOR CONSTRUCTION

SEAL

NORTH CAROLINA PROFESSIONAL SEAL 038577 ENGINEER RICHARD A. ANDERSEN 01-21-15

McKIM&CREED
243 North Front Street
Wilmington, North Carolina 28401
Phone: (910)343-1048, Fax: (910)251-8282
NC LIC. No. F-1222
www.mckimcreed.com

Trask Land CO INC
1202 Eastwood Road
Wilmington, NC 28403
(910) 799-8755

BLAKE FARM

BLAKE FARM
TOPSAIL TOWNSHIP
PENDER COUNTY NORTH CAROLINA

ALLEYS 7, 8, & 9
PLAN AND PROFILE

DATE:	9 JANUARY 2015
MCE PROJ. #	6525-0001
DRAWN	CDN
DESIGNED	RAC
CHECKED	RAM
PROJ. MGR.	RAM

SCALE
HORIZONTAL: 1"=40'
VERTICAL: 1"=4'

M&C FILE NUMBER: CU722
DRAWING NUMBER: 44

STATUS: FINAL PLAN
NOT FOR CONSTRUCTION
REVISION: C

S:\6525\0001\90-Drawings\Plan Profile Sheets\CU722_065250001.dwg, 1/27/2015 7:11:41 PM, cmursey

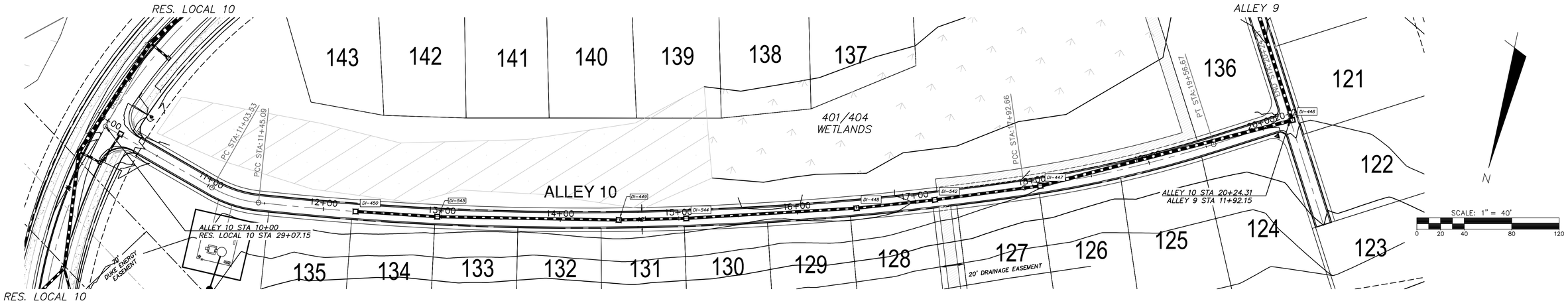

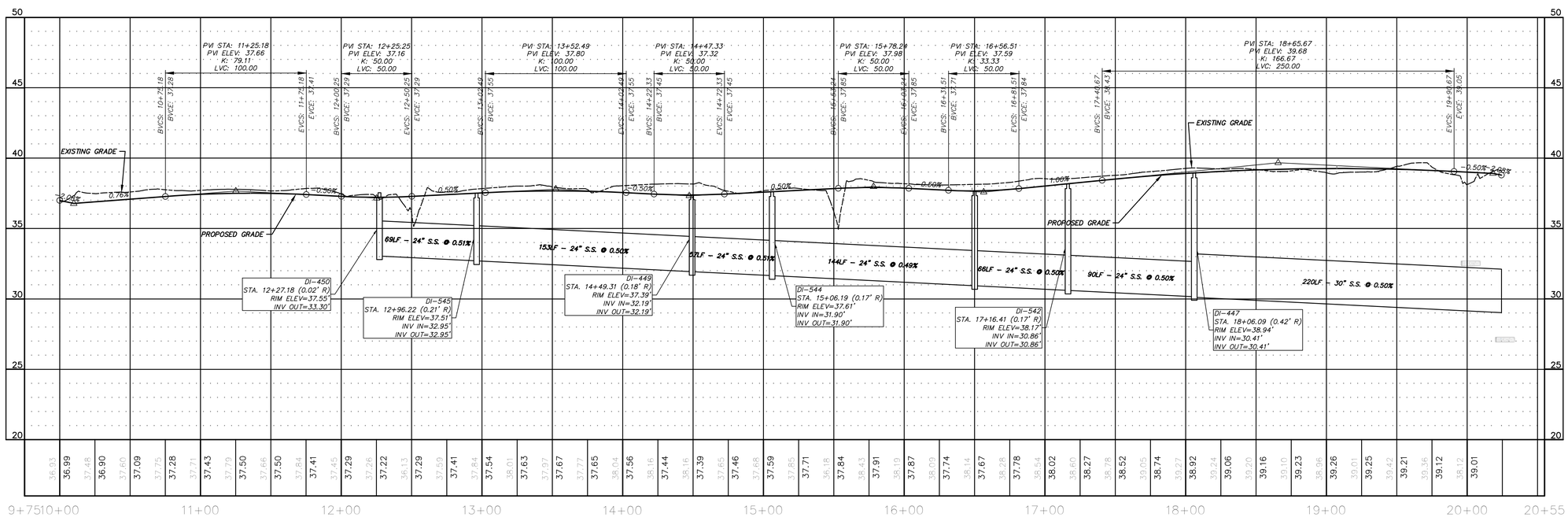

REV.NO.	DESCRIPTIONS	DATE
C	ISSUED FOR PERMITTING	01/21/15
B	PRELIMINARY PLAT PENDER CO. REVIEW	10/10/14
A	75% CONSTRUCTION DOCUMENTS TO TLC FOR REVIEW	08/11/14

REVISIONS

PRELIMINARY - DO NOT USE FOR CONSTRUCTION

SEAL

NORTH CAROLINA PROFESSIONAL SEAL 038577 ENGINEER RICHARD A. ZEISS

01-21-15

McKIM&CREED
243 North Front Street
Wilmington, North Carolina 28401
Phone: (910)343-1048, Fax: (910)251-8282
NC LIC. No. F-1222
www.mckimcreed.com

Trask Land CO INC
1202 Eastwood Road
Wilmington, NC 28403
(910) 799-8755

BLAKE FARM

BLAKE FARM
TOPSAIL TOWNSHIP
PENDER COUNTY NORTH CAROLINA

ALLEY 10
PLAN AND PROFILE
STA 10+00 TO 20+24.31

DATE:	9 JANUARY 2015
MCE PROJ. #	6525-0001
DRAWN	CDN
DESIGNED	RAC
CHECKED	RAM
PROJ. MGR.	RAM

SCALE
HORIZONTAL: 1"=40'
VERTICAL: 1"=4'

M&C FILE NUMBER: CU723
DRAWING NUMBER: 45

STATUS: FINAL PLAN
NOT FOR CONSTRUCTION
REVISION: C

S:\6525\0001\90-Drawings\Plan Profile Sheets\CU723_06525001.dwg, 1/27/2015 7:20:53 PM, cnursey

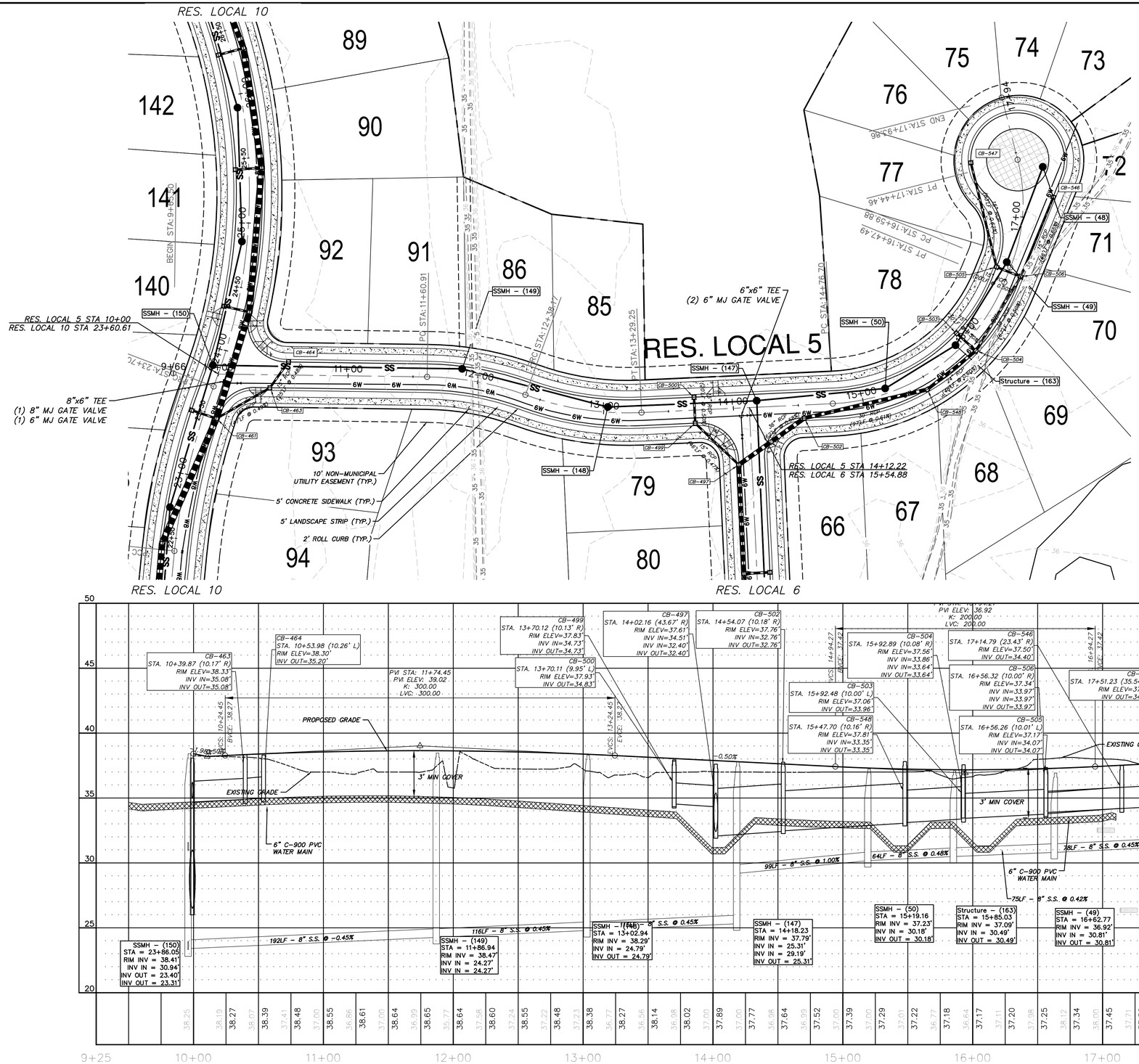

REV.NO.	DESCRIPTIONS	DATE
C	ISSUED FOR PERMITTING	01/21/15
B	PRELIMINARY PLAT PENDER CO. REVIEW	10/10/14
A	75% CONSTRUCTION DOCUMENTS TO T.C FOR REVIEW	08/11/14

REVISIONS

PRELIMINARY - DO NOT USE FOR CONSTRUCTION

SEAL

NORTH CAROLINA PROFESSIONAL SEAL 038577 ENGINEER RICHARD A. MCCLAMMEN

01-21-15

McKIM&CREED
243 North Front Street
Wilmington, North Carolina 28401
Phone: (910)343-1048, Fax: (910)251-8282
NC LIC. No. F-1222
www.mckimcreed.com

Trask Land CO INC
1202 Eastwood Road
Wilmington, NC 28403
(910) 799-8755

BLAKE FARM – EST. 1946

BLAKE FARM
TOPSAIL TOWNSHIP
PENDER COUNTY NORTH CAROLINA

RESIDENTIAL LOCAL 5
PLAN AND PROFILE
STA 10+00 TO 17+93.86

DATE:	9 JANUARY 2015
MCE PROJ. #	6525-0001
DRAWN	CDN
DESIGNED	RAC
CHECKED	RAM
PROJ. MGR.	RAM

SCALE
HORIZONTAL: 1"=40'
VERTICAL: 1"=4'

M&C FILE NUMBER CU724
DRAWING NUMBER 46

STATUS: FINAL PLAN NOT FOR CONSTRUCTION
REVISION C

S:\6525\0001\80-Drawings\Plan Profile Sheets\CU724_065250001.dwg, 1/27/2015 7:26:37 PM, cmurray

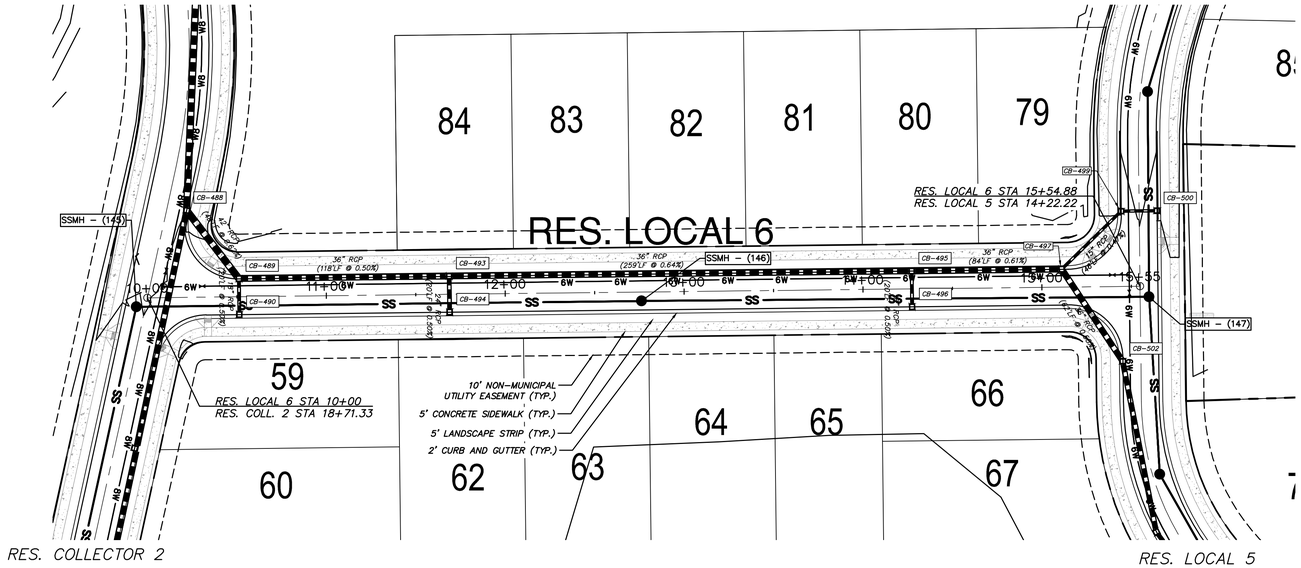

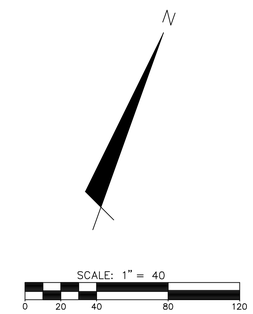

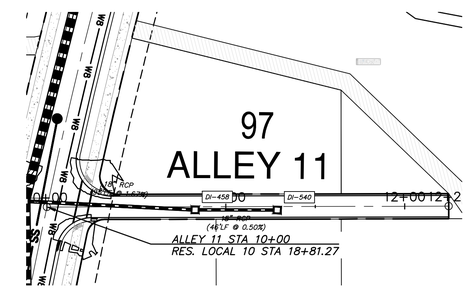

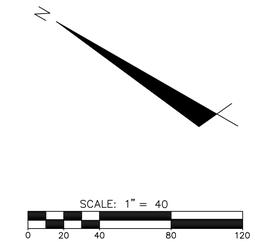

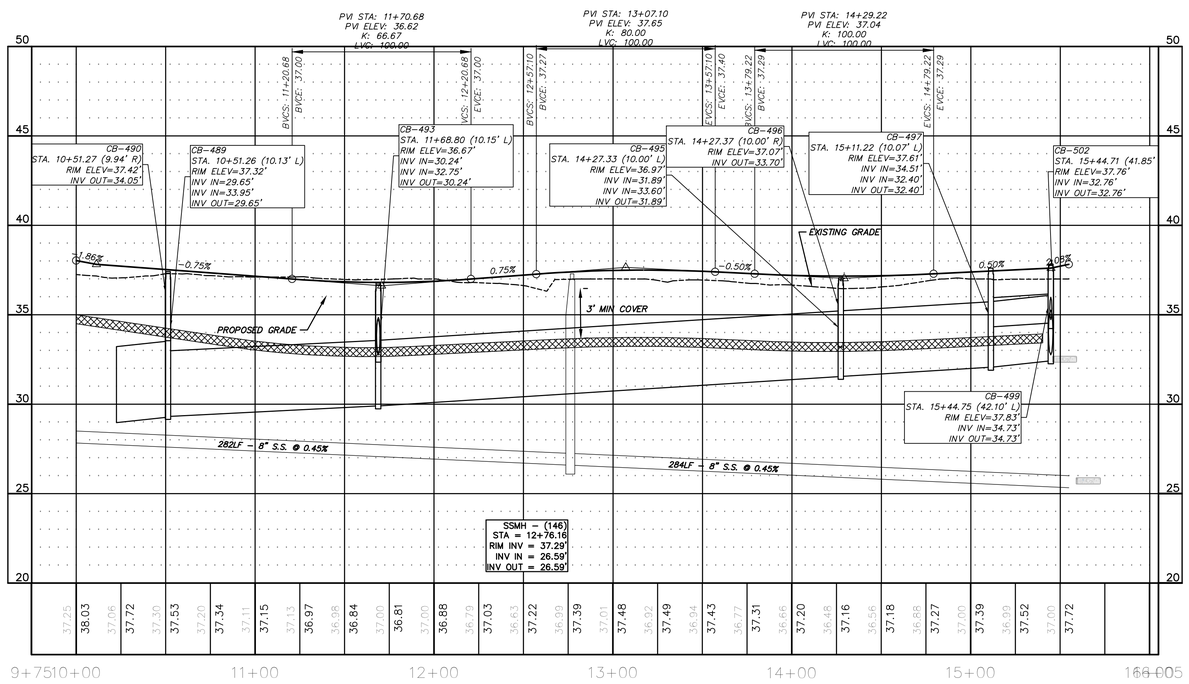

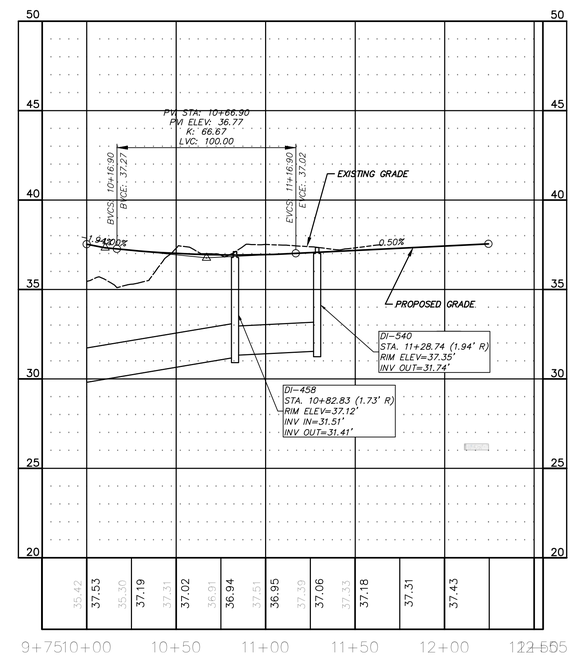

REV.NO.	DESCRIPTIONS	DATE
C	ISSUED FOR PERMITTING	01/21/15
B	PRELIMINARY PLAT PENDER CO. REVIEW	10/10/14
A	75% CONSTRUCTION DOCUMENTS TO TLC FOR REVIEW	08/15/14

REVISIONS

PRELIMINARY - DO NOT USE FOR CONSTRUCTION

SEAL

NORTH CAROLINA PROFESSIONAL SEAL 038577 ENGINEER RICHARD A. MCKIMMON

01-21-15

McKIM&CREED
243 North Front Street
Wilmington, North Carolina 28401
Phone: (910)343-1048, Fax: (910)251-8282

NC LIC. No. F-1222
www.mckimcreed.com

Trask Land CO INC
1202 Eastwood Road
Wilmington, NC 28403
(910) 799-8755

BLAKE FARM – EST. 1946

BLAKE FARM
TOPSAIL TOWNSHIP
PENDER COUNTY NORTH CAROLINA

RESIDENTIAL LOCAL 6 & ALLEY 11 PLAN AND PROFILE

DATE:	9 JANUARY 2015
MCE PROJ. #	6525-0001
DRAWN	CDN
DESIGNED	RAC
CHECKED	RAM
PROJ. MGR.	RAM

SCALE
HORIZONTAL: 1"=40'
VERTICAL: 1"=4'

M&C FILE NUMBER CU725

DRAWING NUMBER 47

STATUS: FINAL PLAN NOT FOR CONSTRUCTION

REVISION C

S:\6525\0001\80-Drawings\Plan Profile Sheets\CU725_06525000L1.dwg, 1/27/2015 7:34:07 PM, cmurley

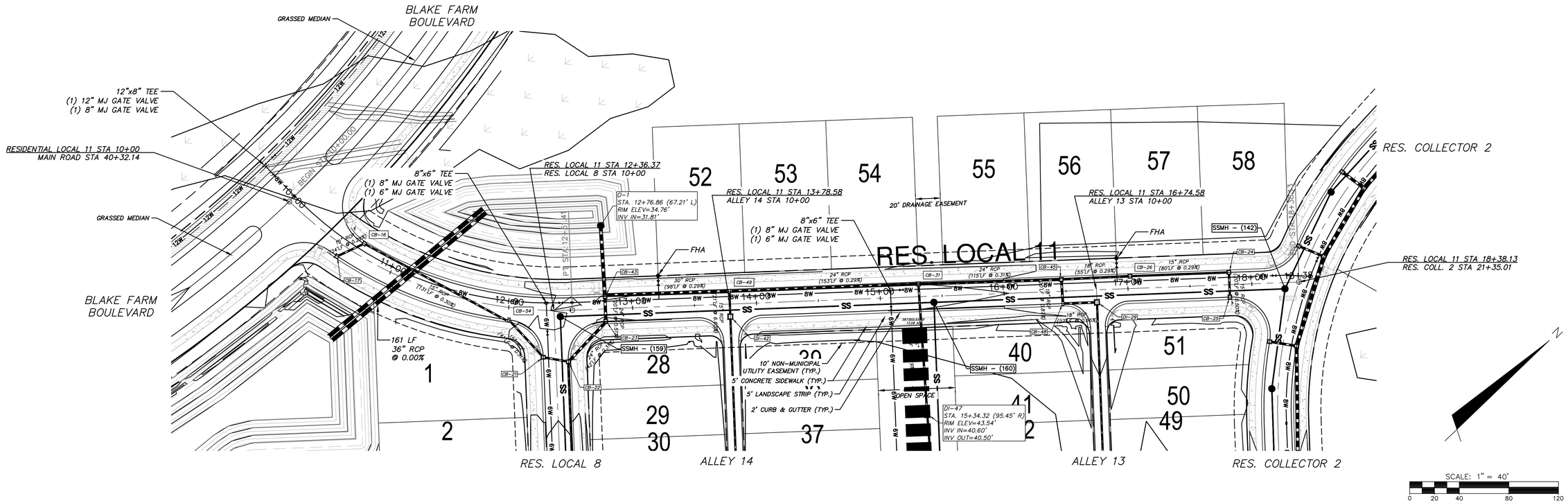

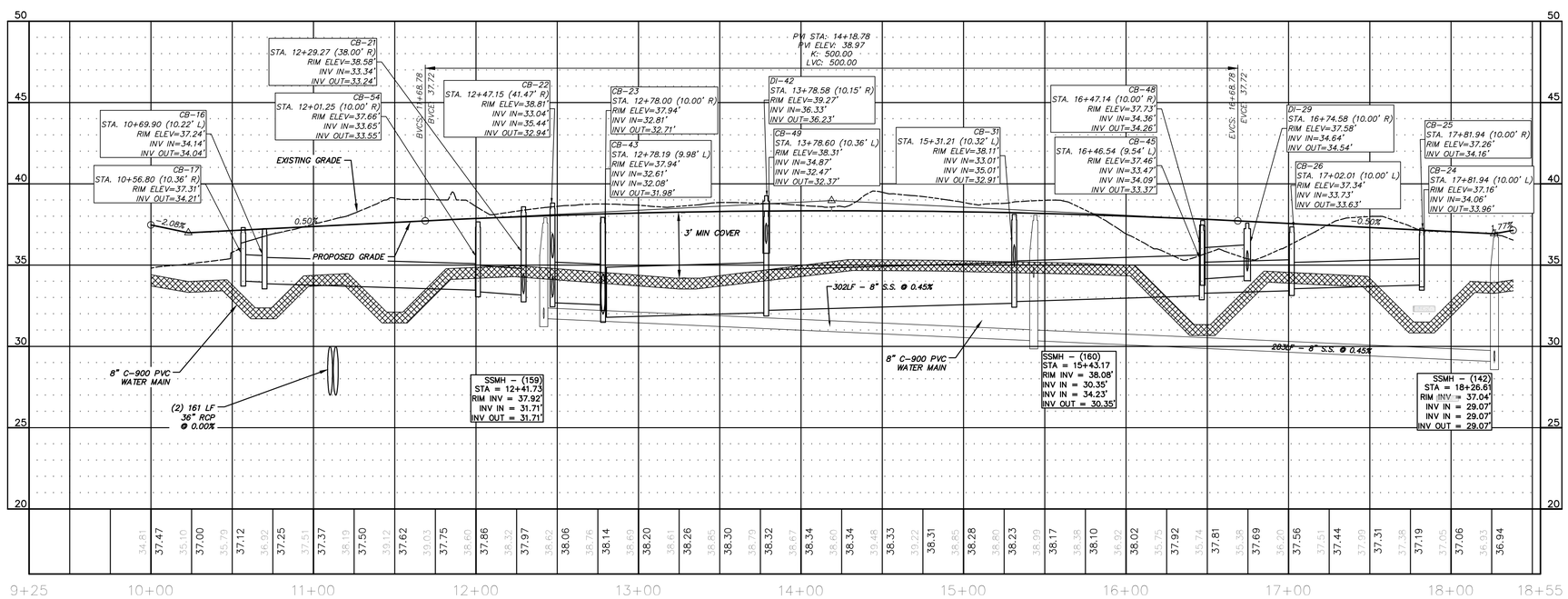

REV.NO.	DESCRIPTIONS	DATE
C	ISSUED FOR PERMITTING	01/21/15
B	PRELIMINARY FLAT RENDER CO. REVIEW	10/10/14
A	75% CONSTRUCTION DOCUMENTS TO TLC FOR REVIEW	08/11/14

REVISIONS

PRELIMINARY - DO NOT USE FOR CONSTRUCTION

SEAL

NORTH CAROLINA PROFESSIONAL SEAL 038577 ENGINEER RICHARD A. MCCREEN

01-21-15

MCKIM&CREED
243 North Front Street
Wilmington, North Carolina 28401
Phone: (910)343-1048, Fax: (910)251-8282

NC LIC. No. F-1222
www.mckimcreed.com

Trask Land CO INC
1202 Eastwood Road
Wilmington, NC 28403
(910) 799-8755

BLAKE FARM
EST. 1946

BLAKE FARM

TOPSAIL TOWNSHIP
PENDER COUNTY NORTH CAROLINA

RESIDENTIAL LOCAL 11
PLAN AND PROFILE
STA 10+00 TO 18+38.13

DATE:	9 JANUARY 2015
MCE PROJ. #	6525-0001
DRAWN	CDN
DESIGNED	RAC
CHECKED	RAM
PROJ. MGR.	RAM

SCALE
HORIZONTAL: 1"=40'
VERTICAL: 1"=4'

M&C FILE NUMBER: CU726
DRAWING NUMBER: 48

STATUS: FINAL PLAN
NOT FOR CONSTRUCTION

REVISION: C

S:\6525\0001\80-Drawings\Plan Profile Sheets\CU726_065250001.dwg, 1/29/2015 12:07:25 PM, cnursey

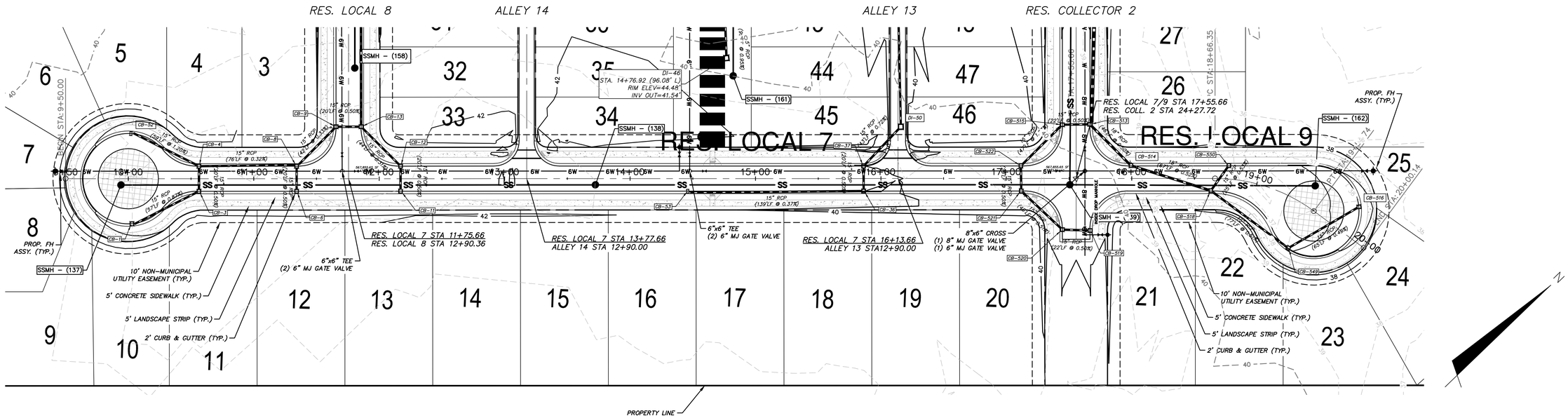

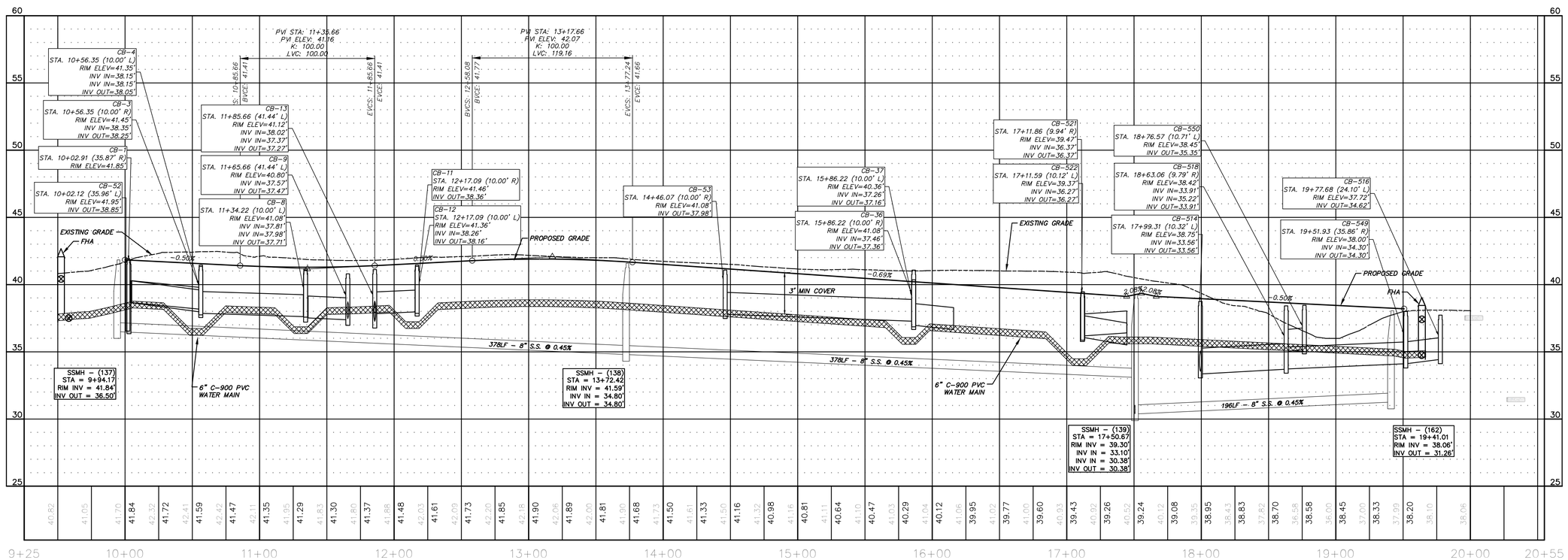

REV.NO	DESCRIPTIONS	DATE
C	ISSUED FOR PERMITTING	01/21/15
B	PRELIMINARY PLAT PENDER CO. REVIEW	10/10/14
A	75% CONSTRUCTION DOCUMENTS TO TLC FOR REVIEW	08/11/14

REVISIONS

PRELIMINARY - DO NOT USE FOR CONSTRUCTION

SEAL

SEAL 038577 PROFESSIONAL ENGINEER RICHARD A. MCGEN

01-21-15

McKIM&CREED
243 North Front Street
Wilmington, North Carolina 28401
Phone: (910)343-1048, Fax: (910)251-8282
NC LIC. No. F-1222
www.mckimcreed.com

Trask Land CO INC
1202 Eastwood Road
Wilmington, NC 28403
(910) 799-8755

BLAKE FARM – EST. 1946

BLAKE FARM

TOPSAIL TOWNSHIP
PENDER COUNTY NORTH CAROLINA

RESIDENTIAL 7 AND 9
PLAN AND PROFILE
STA 10+00 TO 20+00.14

DATE:	9 JANUARY 2015
MCE PROJ. #	6525-0001
DRAWN	CDN
DESIGNED	RAC
CHECKED	RAM
PROJ. MGR.	RAM

SCALE
HORIZONTAL: 1"=40'
VERTICAL: 1"=4'

M&C FILE NUMBER: CU727
DRAWING NUMBER: 49

STATUS: FINAL PLAN NOT FOR CONSTRUCTION
REVISION: C

S:\6525\0001\98-Drawings\Plan Profile Sheets\CU727_06525001.dwg, 1/27/2015 7:47:36 PM, cnursey

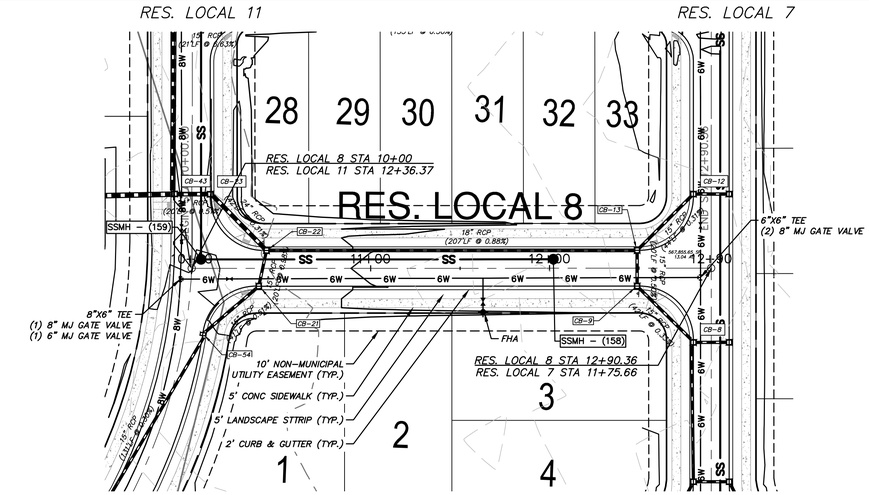

SCALE: 1" = 40'

0 20 40 80 120

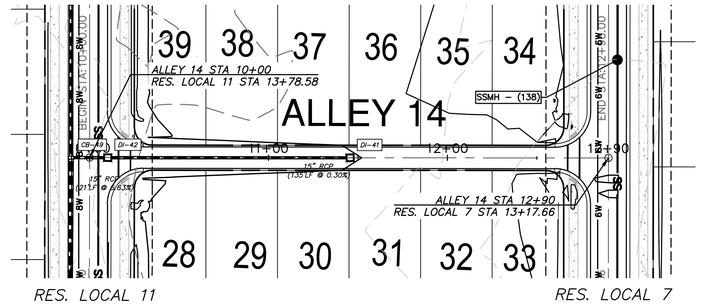

SCALE: 1" = 40'

0 20 40 80 120

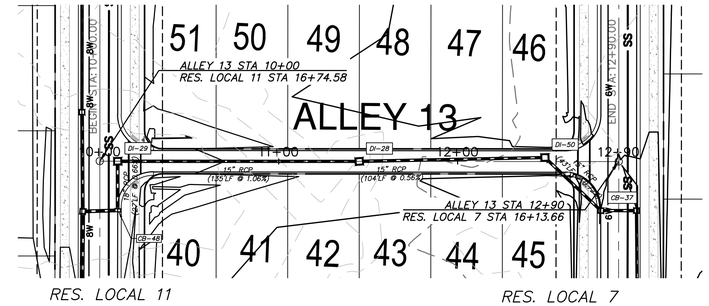

SCALE: 1" = 40'

0 20 40 80 120

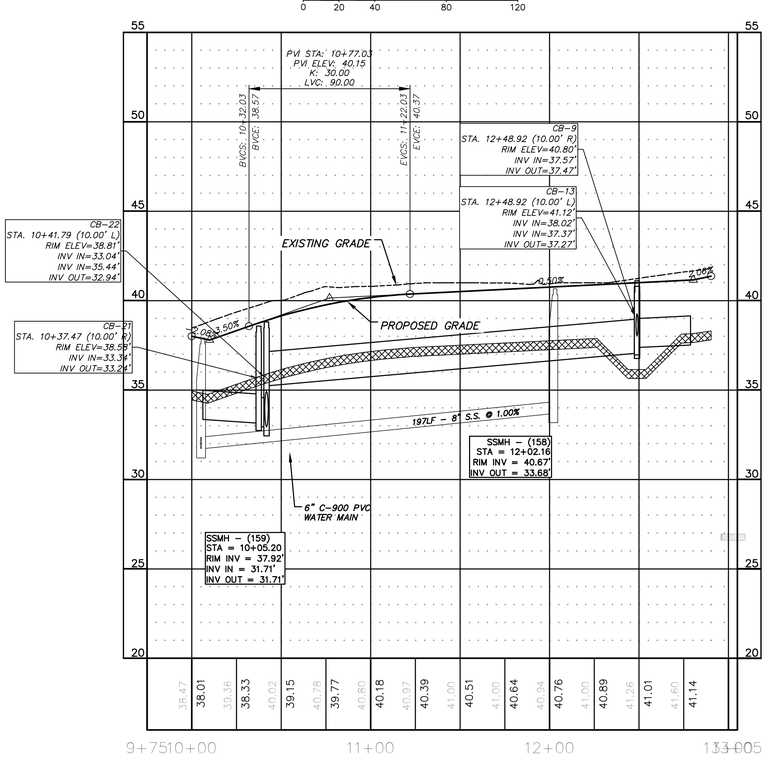

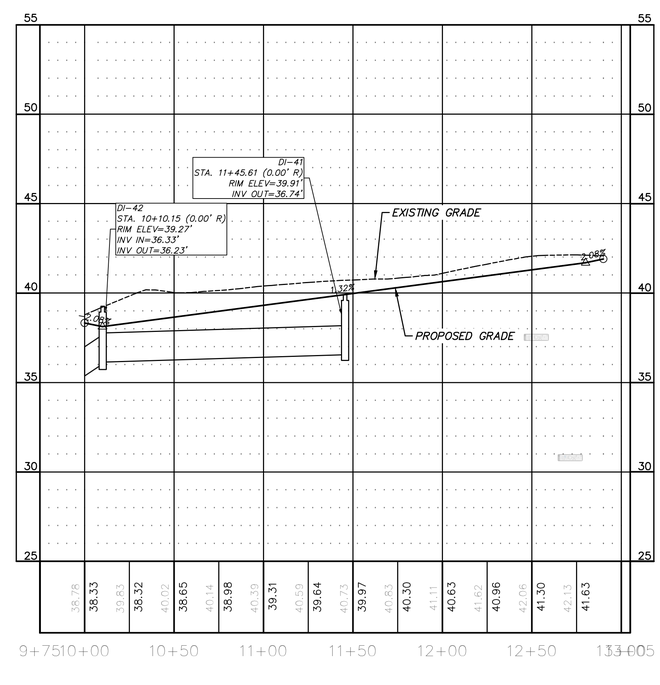

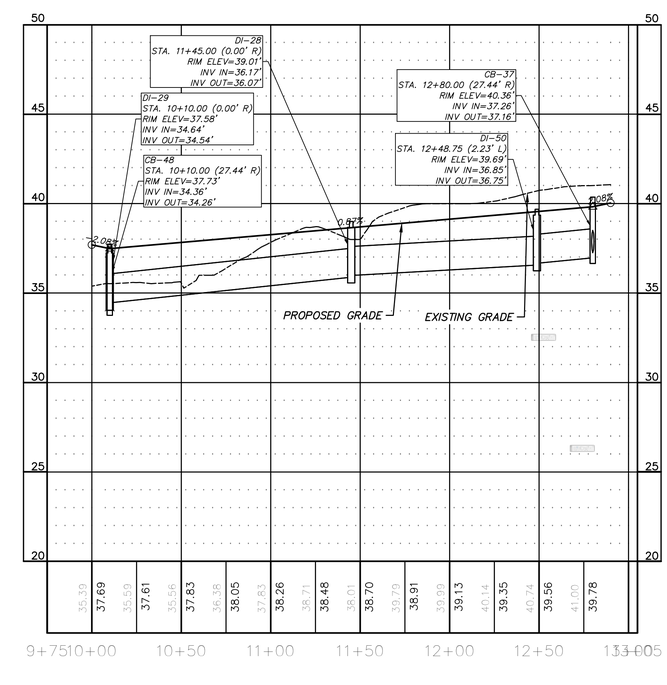

REV.NO.	DESCRIPTIONS	DATE
C	ISSUED FOR PERMITTING	01/21/15
B	PRELIMINARY PLAT PENDER CO. REVIEW	10/10/14
A	75% CONSTRUCTION DOCUMENTS TO TLC FOR REVIEW	08/11/14

REVISIONS

PRELIMINARY - DO NOT USE FOR CONSTRUCTION

SEAL

NORTH CAROLINA PROFESSIONAL SEAL 038577 ENGINEER RICHARD A. MCGEEN

01-21-15

McKIM&CREED
243 North Front Street
Wilmington, North Carolina 28401
Phone: (910)343-1048, Fax: (910)251-8282
NC LIC. No. F-1222
www.mckimcreed.com

Trask Land CO INC
1202 Eastwood Road
Wilmington, NC 28403
(910) 799-8755

BLAKE FARM – EST. 1946 –

BLAKE FARM

TOPSAIL TOWNSHIP
PENDER COUNTY NORTH CAROLINA

RES. LOCAL 8 AND ALLEYS 13 & 14 PLAN AND PROFILE

DATE:	9 JANUARY 2015
MCE PROJ. #	6525-0001
DRAWN	CDN
DESIGNED	RAC
CHECKED	RAM
PROJ. MGR.	RAM

SCALE
HORIZONTAL: 1"=40'
VERTICAL: 1"=4'

M&C FILE NUMBER: CU728
DRAWING NUMBER: 50

STATUS: FINAL PLAN NOT FOR CONSTRUCTION
REVISION: C

S:\6525\0001\80-Drawings\Plan Profile Sheets\CU728_06525000 1.dwg, 1/27/2015 7:54:17 PM, cmursey

NOTES

1. CONTRACTOR SHALL FINE GRADE SITE FOR POSITIVE DRAINAGE.

2. THERE ARE NO WETLANDS ON THIS SITE.

3. COORDINATES SHOWN ON THIS DRAWING ARE ASSUMED AND DO NOT CONFORM TO N.C. GRID COORDINATES.

4. CONCRETE PAD FOR GENERATOR SHALL BE A MINIMUM OF 8" WIDER THAN GENERATOR ON ALL SIDES. ALL EDGES MUST BE CHAMFERED. GENERATOR SHALL INCLUDE SUITABLE PLATFORM FOR ACCESS.

5. COMPLETE INSTALLATION OF THE 1" P.E. WATER SERVICE INCLUDING TAP, METER BOX, RPZ, YARD HYDRANT AND ALL MISCELLANEOUS APPURTENANCES SHALL BE INCLUDED IN THE LUMP SUM COST OF THE PUMP STATION.

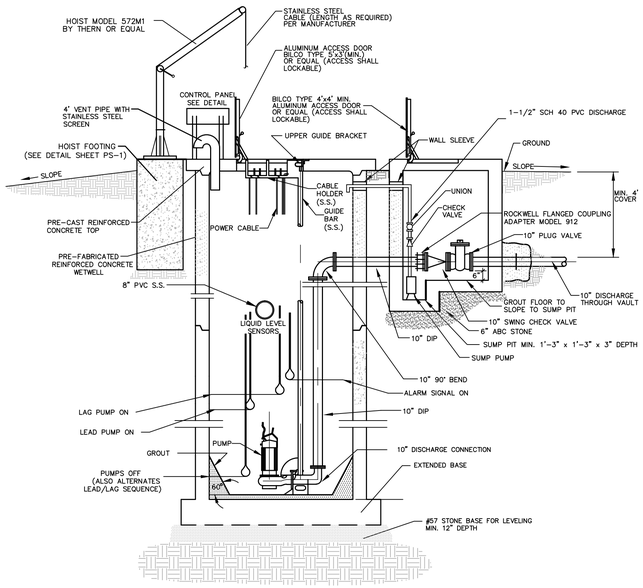

BLAKE FARM PUMP STATION — SECTION

NOT TO SCALE

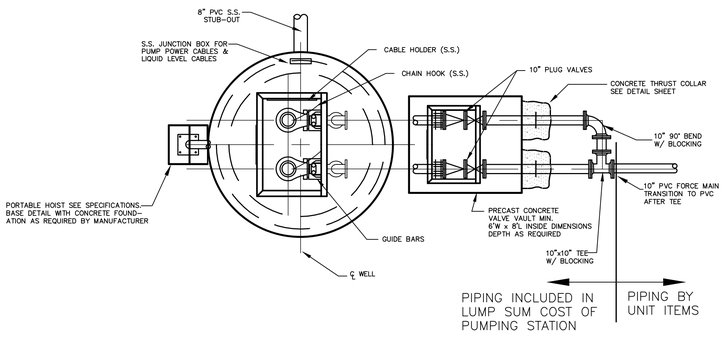

BLAKE FARM PUMP STATION — PLAN

NOT TO SCALE

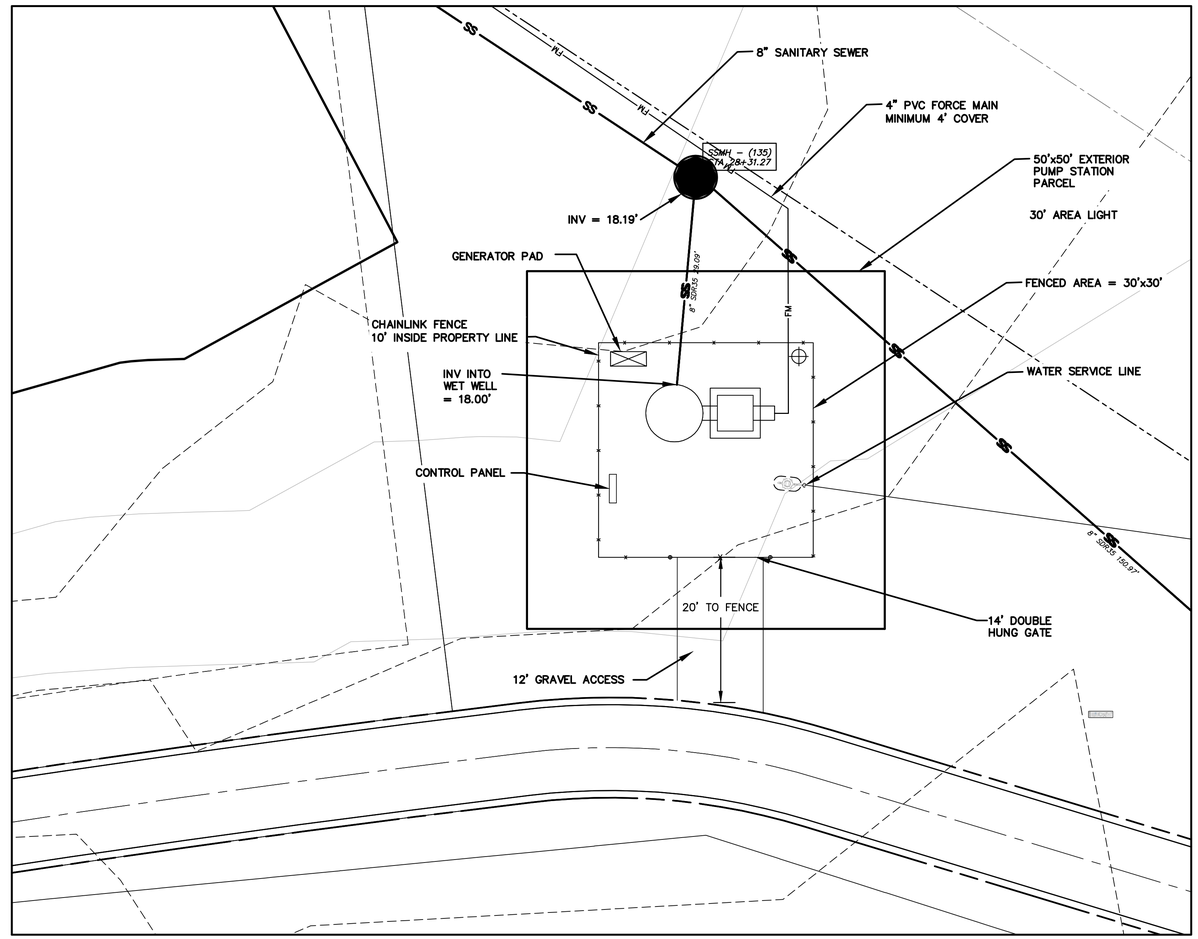

BLAKE FARM PUMP STATION — SITE PLAN

1"=10'

REV.NO.	DESCRIPTIONS	DATE
C	ISSUED FOR PERMITTING	01/21/15
B	PRELIMINARY PLAT RENDER CO. REVIEW	10/10/14
A	75% CONSTRUCTION DOCUMENTS TO TLC FOR REVIEW	08/15/14

REVISIONS

PRELIMINARY - DO NOT USE FOR CONSTRUCTION

SEAL

NORTH CAROLINA PROFESSIONAL SEAL 038577 ENGINEER RICHARD A. CLAGGETT-SEN

01-21-15

McKIM&CREED
243 North Front Street
Wilmington, North Carolina 28401
Phone: (910)343-1048, Fax: (910)251-8282

NC LIC. No. F-1222
www.mckimcreed.com

Trask Land CO INC
1202 Eastwood Road
Wilmington, NC 28403
(910) 799-8755

BLAKE FARM — EST. 1546 —

BLAKE FARM
TOPSAIL TOWNSHIP
PENDER COUNTY NORTH CAROLINA

PUMP STATION DETAILS

DATE:	9 JANUARY 2015
MCE PROJ. #	6525-0001
DRAWN	CDN
DESIGNED	RAC
CHECKED	RAM
PROJ. MGR.	RAM

SCALE
HORIZONTAL: N/A
VERTICAL: N/A

M&C FILE NUMBER CU301
DRAWING NUMBER 51

STATUS: FINAL PLAN NOT FOR CONSTRUCTION
REVISION C

S:\6525\0001\80-Drawings\CU301_065250001.dwg, 1/28/2015 11:42:28 AM, cnursey

STATE OF NORTH CAROLINA
DEPT. OF TRANSPORTATION
DIVISION OF HIGHWAYS
RALEIGH, N.C.

1-12

ENGLISH STANDARD DRAWING FOR
CONCRETE CURB, GUTTER AND CURB & GUTTER

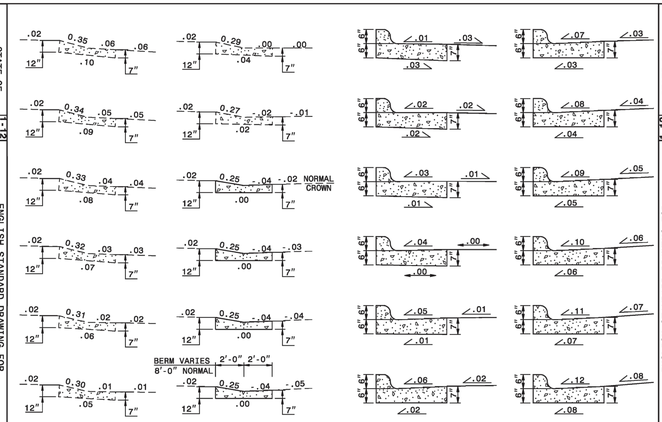

SECTION VIEWS OF EXPRESSWAY GUTTER IN SUPER ELEVATION

SECTION VIEWS OF 2'-6" CURB AND GUTTER SUPERELEVATION RATES

SHEET 2 OF 3
846.01

STATE OF NORTH CAROLINA
DEPT. OF TRANSPORTATION
DIVISION OF HIGHWAYS
RALEIGH, N.C.

1-12

ENGLISH STANDARD DRAWING FOR
CONCRETE CURB, GUTTER AND CURB & GUTTER

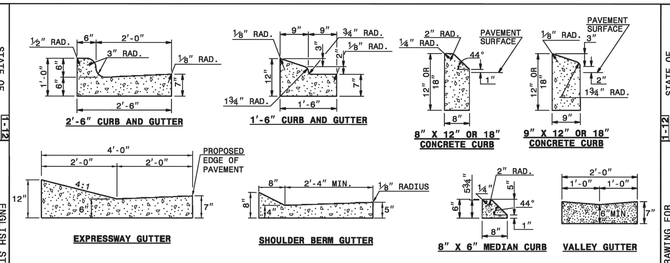

SECTION VIEW OF CURBS OR CURBS AND GUTTERS

GENERAL NOTES:
- PLACE CONTRACTION JOINTS AT 10' INTERVALS, EXCEPT THAT A 15' SPACING MAY BE USED WHEN A MACHINE IS USED OR WHEN SATISFACTORY SUPPORT FOR THE FACE FORM CAN BE OBTAINED WITHOUT THE USE OF TEMPLATES AT 10' INTERVALS.
- JOINT SPACING MAY BE ALTERED IF REQUIRED BY THE ENGINEER.
- CONTRACTION JOINTS MAY BE INSTALLED WITH THE USE OF TEMPLATES OR FORMED BY OTHER APPROVED METHODS. CONSTRUCT NON-TEMPLATE FORMED JOINTS A MIN. OF 1½" DEEP.
- FILL ALL CONSTRUCTION JOINTS, EXCEPT IN 8"x6" MEDIAN CURB, WITH JOINT FILLER AND SEALER.
- SPACE EXPANSION JOINTS AT 90' INTERVALS AND ADJACENT TO ALL RIGID OBJECTS.

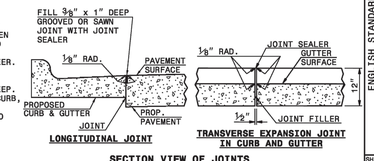

SECTION VIEW OF JOINTS

SHEET 1 OF 3
846.01

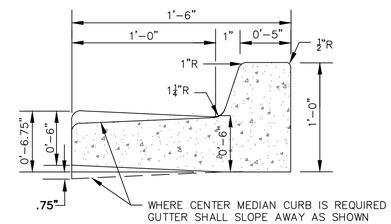

STANDARD 18" CURB SECTION
NOT TO SCALE

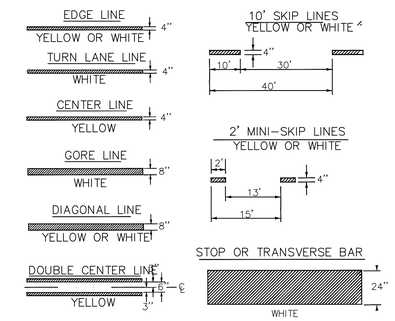

PAVEMENT MARKING DETAIL
NOT TO SCALE

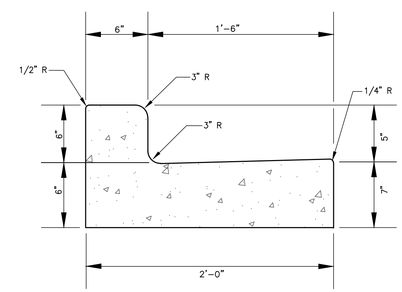

STD. 24" CURB AND GUTTER
NOT TO SCALE

REV.NO.	DESCRIPTIONS	DATE
C	ISSUED FOR PERMITTING	01/21/15
B	PRELIMINARY PLAT PENDER CO. REVIEW	10/10/14
A	75% CONSTRUCTION DOCUMENTS TO TLC FOR REVIEW	08/11/14

REVISIONS

PRELIMINARY - DO NOT USE FOR CONSTRUCTION

SEAL

SEAL 038577 ENGINEER RICHARD A. MCKIMMON NORTH CAROLINA PROFESSIONAL

01-21-15

McKIM & CREED
243 North Front Street
Wilmington, North Carolina 28401
Phone: (910)343-1048, Fax: (910)251-8282

NC LIC. No. F-1222
www.mckimcreed.com

Trask Land CO INC
1202 Eastwood Road
Wilmington, NC 28403
(910) 799-8755

BLAKE FARM
EST. 1946

BLAKE FARM
TOPSAIL TOWNSHIP
PENDER COUNTY NORTH CAROLINA

SITE DETAILS

DATE:	9 JANUARY 2015
MCE PROJ. #	6525-0001
DRAWN	CDN
DESIGNED	RAC
CHECKED	RAM
PROJ. MGR.	RAM

SCALE
HORIZONTAL: N/A
VERTICAL: N/A

M&C FILE NUMBER CS501
DRAWING NUMBER 52

STATUS: FINAL PLAN NOT FOR CONSTRUCTION
REVISION C

S:\6525\0001\B-Drawings\CS501_06526001.dwg, 1/27/2015 8:05:57 PM, courtey

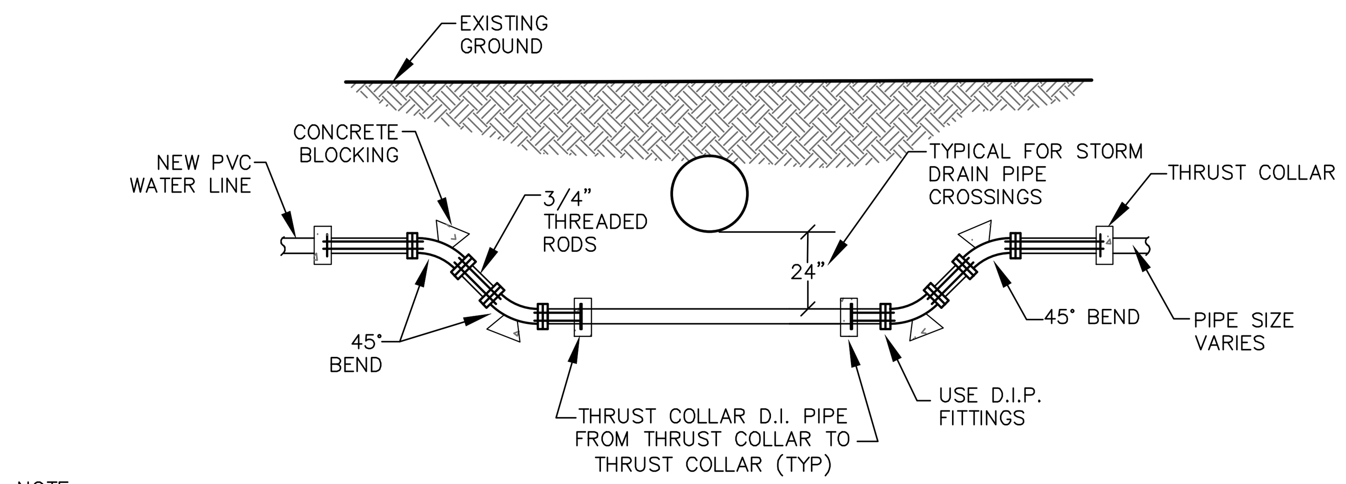

NOTE:
WATERLINE SHALL BE DUCTILE IRON PIPE AT ALL AREAS WHERE ADEQUATE COVER CANNOT BE MAINTAINED.

PIPE CROSSING DETAIL "A"
NOT TO SCALE

WATER MAINS 8" AND SMALLER SHALL HAVE A MINIMUM OF 3' OF COVER. WATER MAINS 12" AND LARGER SHALL HAVE A MINIMUM OF 3'-6" OF COVER.

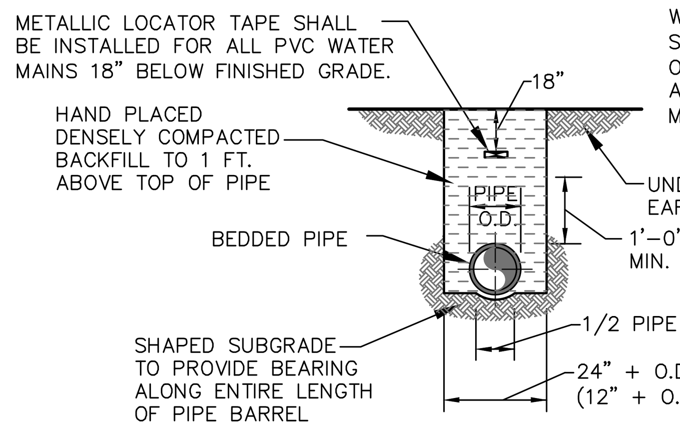

PIPE LAYING CONDITIONS
NOT TO SCALE

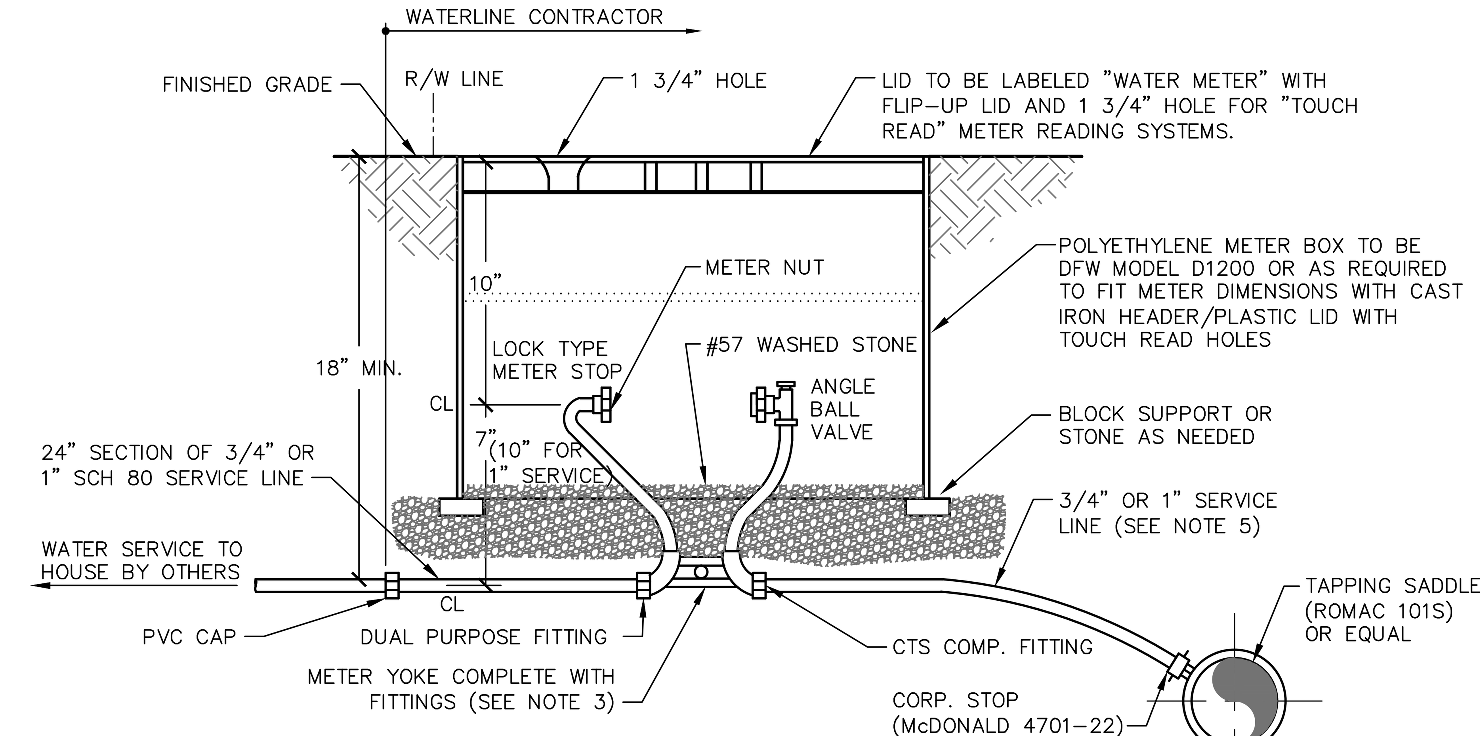

NOTE:
1) CONTRACTOR SHALL PLACE METER BOX IN NON TRAFFIC AREA ONLY.
2) CONTRACTOR SHALL CENTER METER YOKE IN METER BOX.
3) McDONALD 26-207WX2D 33 (3/4")
McDONALD 26-410WX2D 44 (1") OR EQUAL
4) BOX TO BE ADJUSTED VERTICALLY TO ACCEPT COUNTY'S STANDARD SERVICE METER. (NEPTUNE T-10, PRO READ REGISTER, R900 MIU)
5) SERVICE LINE SHALL BE CLASS 200 CTS POLYETHYLENE.

5/8", 3/4", 1" AND 2" WATER METER SERVICE DETAIL
NOT TO SCALE

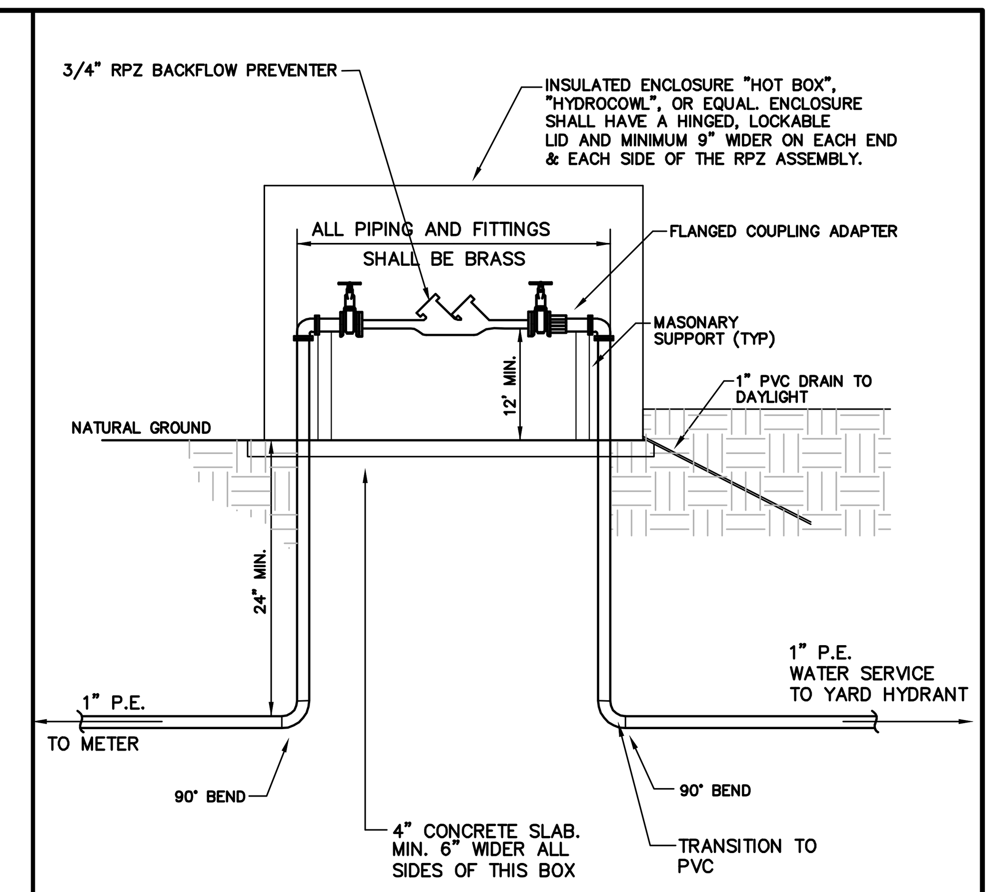

3/4" RPZ DETAIL
NOT TO SCALE

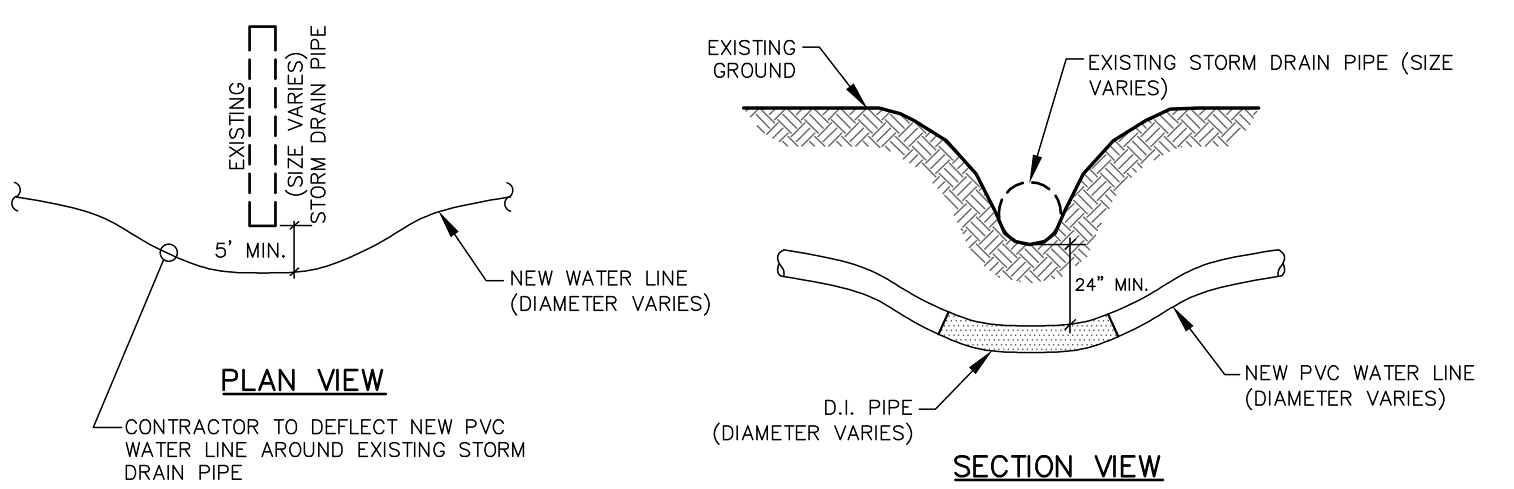

PIPE CROSSING DETAIL "B"
NOT TO SCALE

NOTE:
WATERLINE SHALL BE DUCTILE IRON PIPE AT ALL AREAS WHERE ADEQUATE COVER CANNOT BE MAINTAINED.

NOTE:
WATERLINE SHALL BE DUCTILE IRON PIPE AT ALL AREAS WHERE ADEQUATE COVER CANNOT BE MAINTAINED.

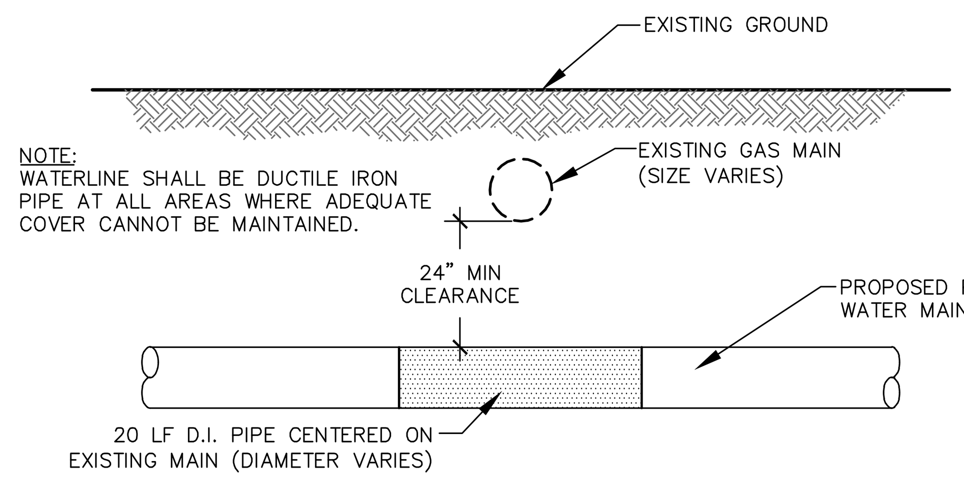

PIPE CROSSING DETAIL "D"
NOT TO SCALE

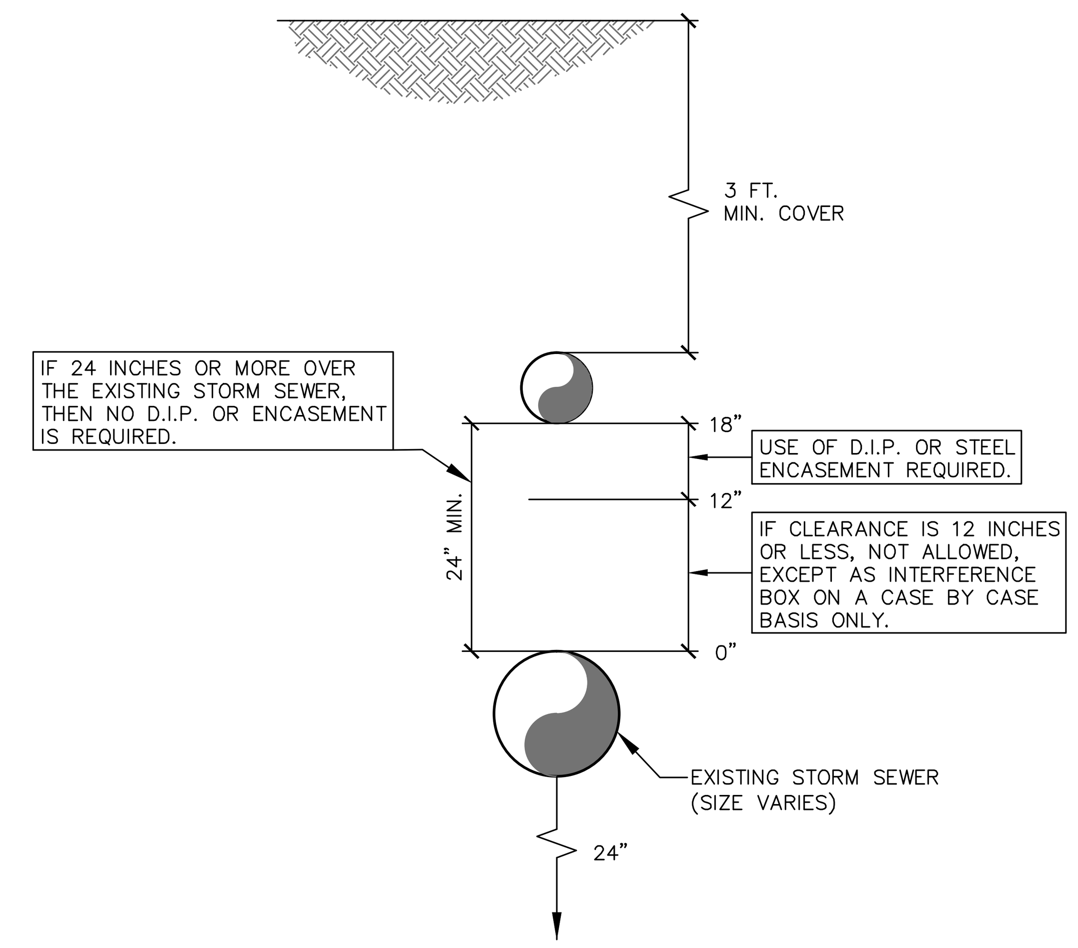

PIPE CROSSING DETAIL "C"
NOT TO SCALE

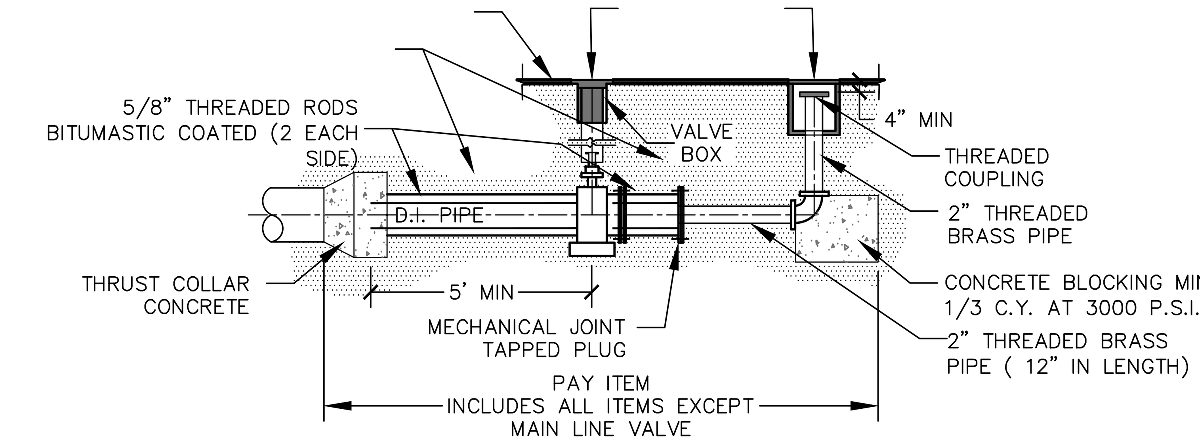

TEMPORARY BLOW-OFF ASSEMBLY
NOT TO SCALE

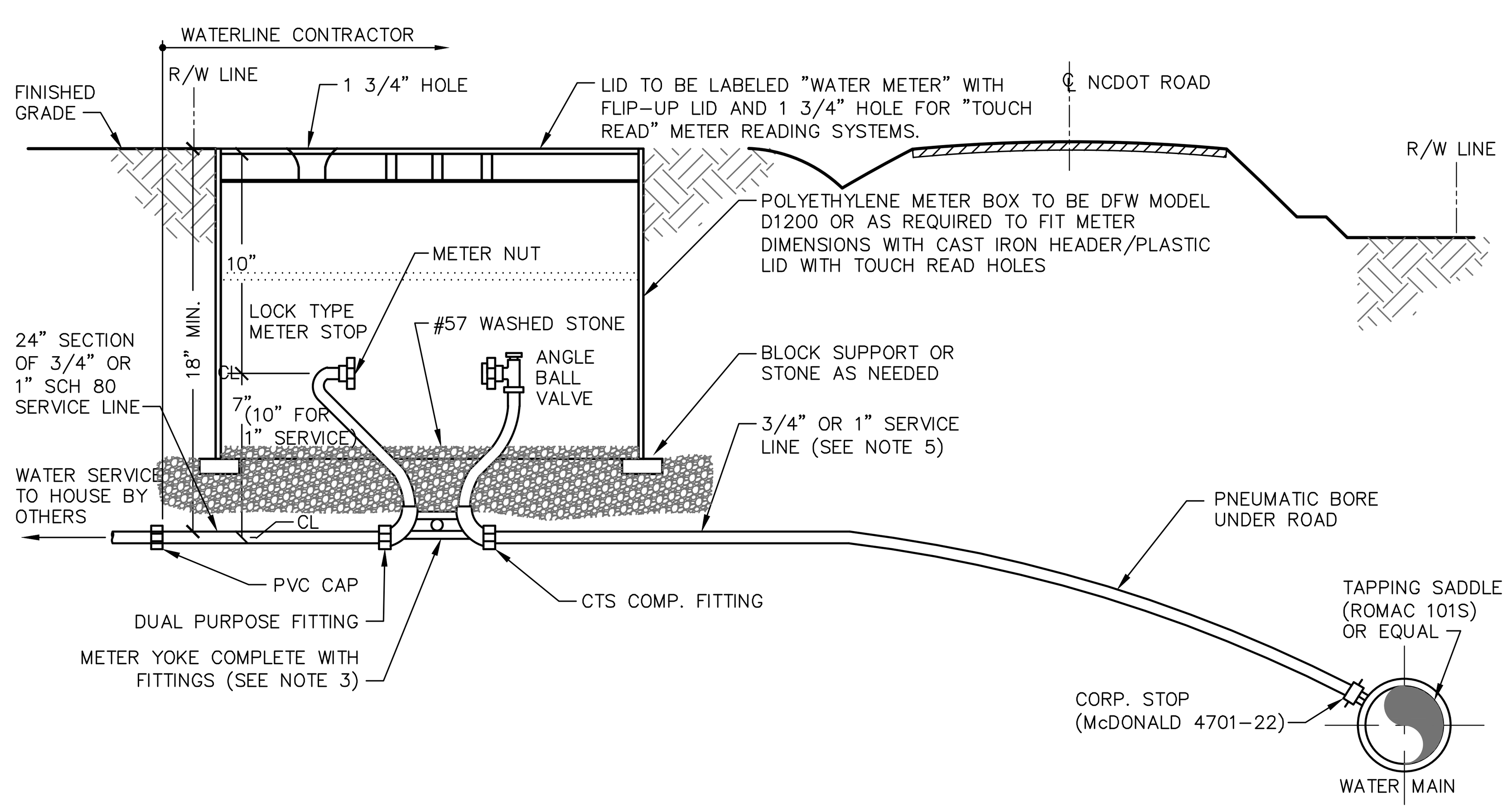

NOTE:
1) CONTRACTOR SHALL PLACE METER BOX IN NON TRAFFIC AREA ONLY.
2) CONTRACTOR SHALL CENTER METER YOKE IN METER BOX.
3) McDONALD 26-207WX2D 33 (3/4")
McDONALD 26-410WX2D 44 (1") OR EQUAL
4) BOX TO BE ADJUSTED VERTICALLY TO ACCEPT COUNTY'S STANDARD SERVICE METER. (NEPTUNE T-10 PRO READ REGISTER, R900 MIU)
5) SERVICE LINE SHALL BE CLASS 200 CTS. POLYETHYLENE.
6) DRY BORE ALL SERVICES LOCATED ON OPPOSITE SIDE OF STATE HIGHWAYS.
7) BORE SHALL EXTEND 5' OUTISDE NCDOT DITCH ON EACH SIDE OF ROAD.
8) MAINTAIN 3'-6" COVER UNDER PAVED SURFACES AND 3'-0" UNDER DITCHES.

WATER METER SERVICE DETAIL (OTHER SIDE OF ROAD)
NOT TO SCALE

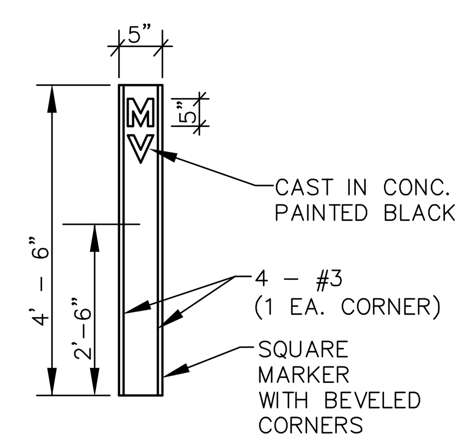

VALVE MARKER DETAIL
NOT TO SCALE

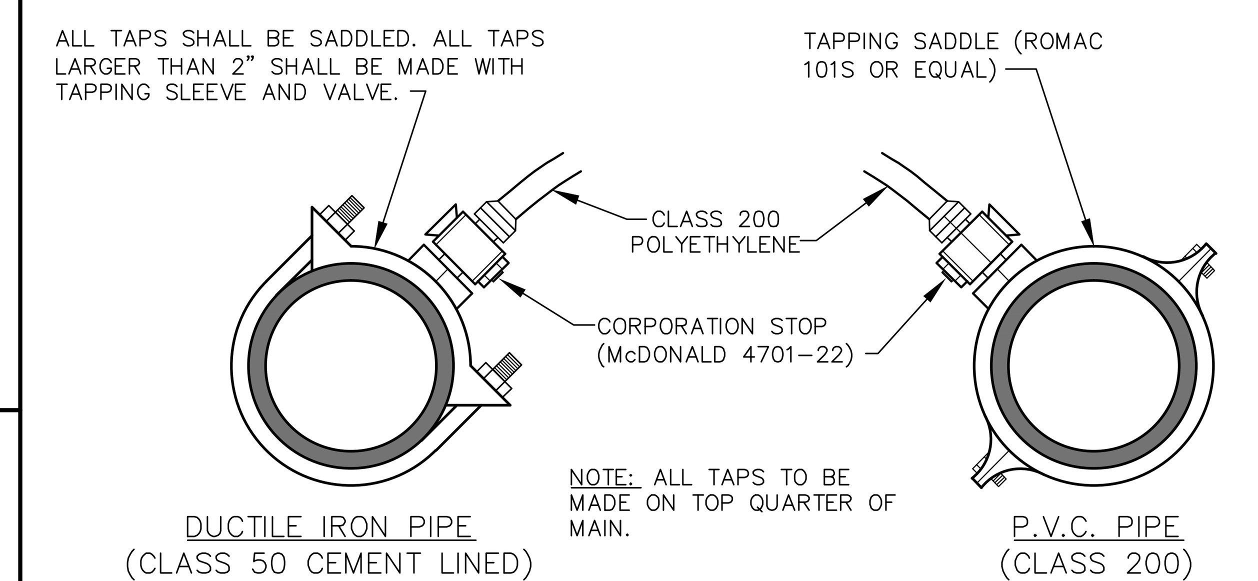

NOTE: ALL TAPS TO BE MADE ON TOP QUARTER OF MAIN.

STANDARD WATER TAP DETAIL
NOT TO SCALE

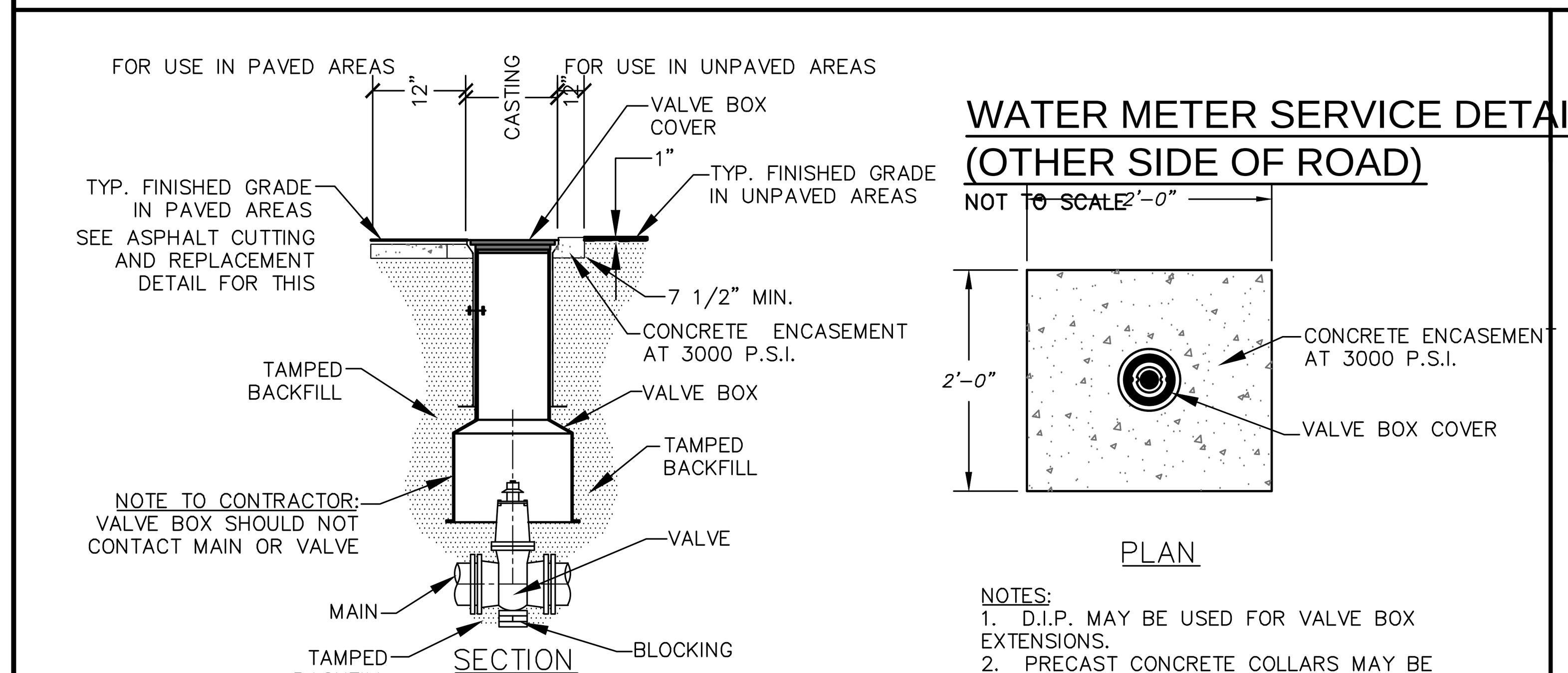

NOTES:
1. D.I.P. MAY BE USED FOR VALVE BOX EXTENSIONS.
2. PRECAST CONCRETE COLLARS MAY BE USED IN SHOULDER AREAS.

VALVE AND VALVE BOX INSTALLATION
NOT TO SCALE

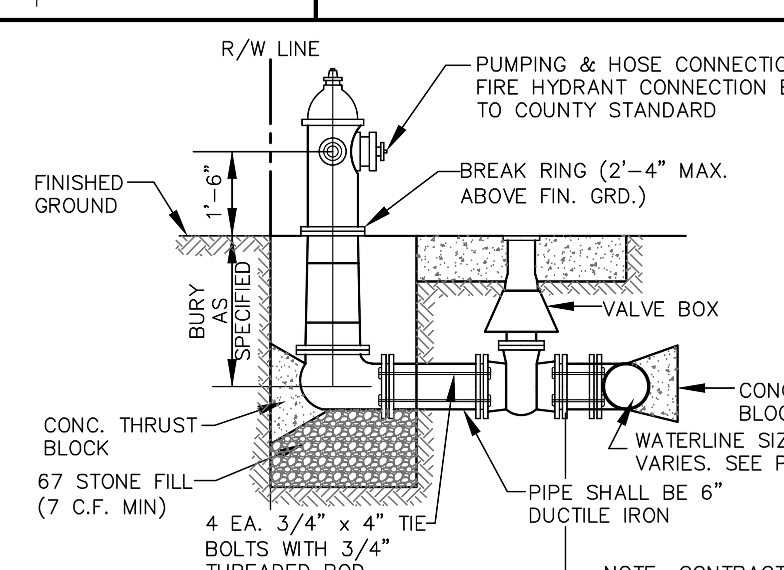

NOTE: MIN. OF 4 CU. FT. STONE (MORE IF REQ'D). CONC. THRUST BLOCK TO HAVE MIN. OF 6 SQ. FT. BEARING ON SOLID BANK (MORE IF REQ'D.). DRAIN HOLE AND FLANGES SHALL BE CLEAR OF CONC.

PAY ITEM
FIRE HYDRANT ASSEMBLY INCLUDES ALL ITEMS EXCEPT MAIN LINE TEE

NOTE: CONTRACTOR WILL BE REQUIRED TO EXTEND HYDRANT TO RIGHT-OF-WAY AS INDICATED ON PLAN SHEETS. THIS SHALL INCLUDE ALL PIPING AND FITTINGS AS NECESSARY TO MAINTAIN ADEQUATE COVER UNDER ROADSIDE DITCHES. THIS SHALL BE INCLUDED IN THE COST OF THE FIRE HYDRANT ASSEMBLY.

FIRE HYDRANT ASSEMBLY
NOT TO SCALE

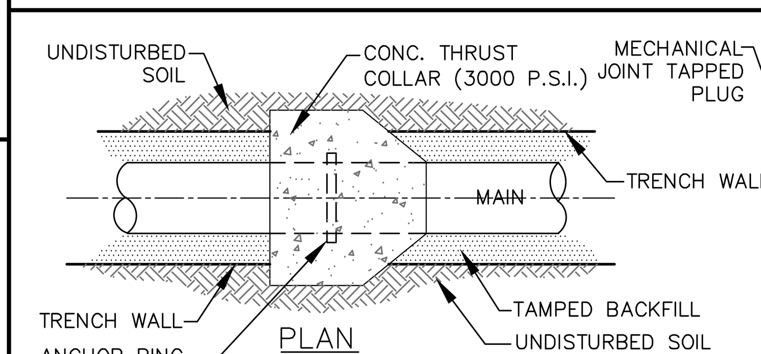

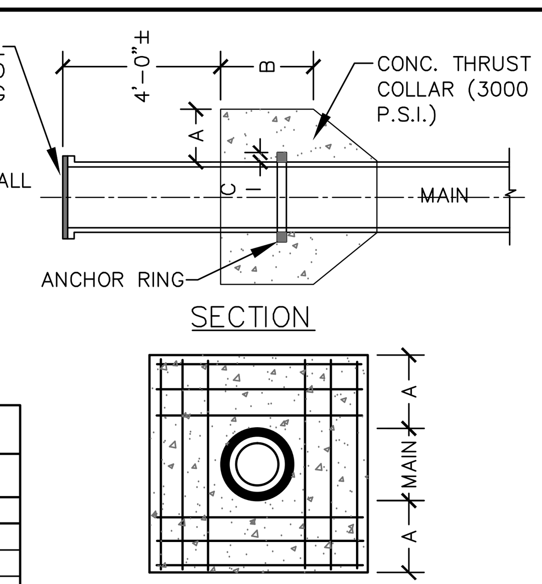

SCHEDULE

PIPE DIAMETER	CONCRETE THRUST COLLAR		ANCHOR COLLAR	RINGS REQUIRED
	A	B	C	
6",8",12"	1'-0"	1'-0"	2"	ONE
16"	1'-4"	1'-0"	2"	ONE
20"	1'-4"	1-0"	3"	ONE
24"	1'-4"	1'-0"	3"	TWO
30"	1'-4"	1'-2"	4"	TWO
36"	1'-4"	1'-4"	4"	TWO

NOTE:
6" TO 16" MAINS = 12-NO. 7 BARS 20" TO 36" MAINS = 12-NO. 8 BARS BARS PLACED AS SHOWN

THRUST COLLAR INSTALLATION
NOT TO SCALE

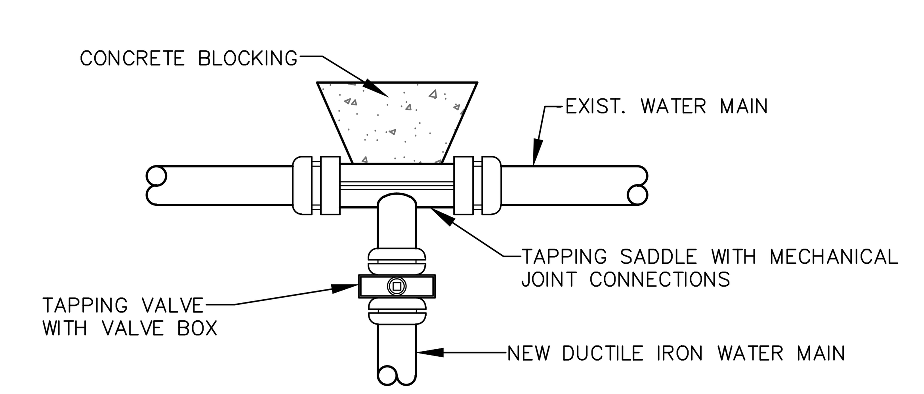

TAPPING SADDLE AND VALVE ASSEMBLY
NOT TO SCALE

REV.NO.	DESCRIPTIONS	DATE
C	ISSUED FOR PERMITTING	01/21/15
B	PRELIMINARY PLAT PENDER CO. REVIEW	10/10/14
A	75% CONSTRUCTION DOCUMENTS TO TLC FOR REVIEW	08/11/14

REVISIONS

SEAL
PRELIMINARY- DO NOT USE FOR CONSTRUCTION

SEAL
NORTH CAROLINA PROFESSIONAL SEAL 038577 ENGINEER RICHARD A. CHRISTENSEN 01-21-15

McKIM&CREED
243 North Front Street
Wilmington, North Carolina 28401
Phone: (910)343-1048, Fax: (910)251-8282
NC LIC. No. F-1222
www.mckimcreed.com

Trask Land CO INC
1202 Eastwood Road
Wilmington, NC 28403
(910) 799-8755

BLAKE FARM — EST 1946 —

BLAKE FARM
TOPSAIL TOWNSHIP
PENDER COUNTY NORTH CAROLINA

UTILITY DETAILS

DATE:	9 JANUARY 2015
MCE PROJ. #	6525-0001
DRAWN	CDN
DESIGNED	RAC
CHECKED	RAM
PROJ. MGR.	RAM

SCALE
HORIZONTAL: N/A
VERTICAL: N/A

M&C FILE NUMBER CU501
DRAWING NUMBER 53

STATUS: FINAL PLAN NOT FOR CONSTRUCTION
REVISION C

S:\6525\0001\80-Drawings\CU501_065250001.dwg, 1/28/2015 11:43:28 AM, cnursey

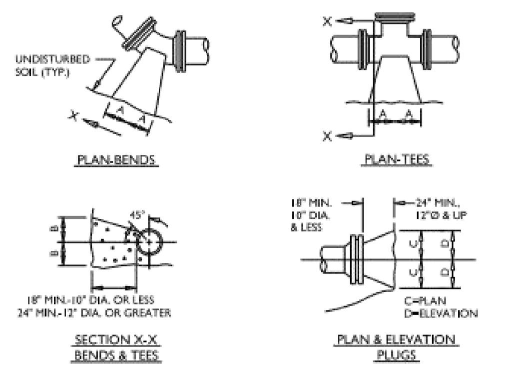

PIPE SIZE	90° BEND		45° BEND		22-1/2° BEND		11-1/4° BEND		TEE		PLUG	
	A	B	A	B	A	B	A	B	A	B	C	D
4"	18"	12"	10"	13"	7"	10"	7"	10"	12"	14"	13"	6"
6"	18"	12"	10"	13"	7"	10"	7"	10"	12"	14"	19"	9"
8"	24"	18"	13"	18"	10"	12"	10"	12"	16"	18"	25"	11"
10"	28"	22"	15"	22"	12"	15"	12"	15"	20"	22"	31"	14"
12"	32"	28"	19"	28"	14"	18"	14"	18"	22"	28"	37"	17"
16"	54"	38"	30"	36"	18"	36"	18"	36"	36"	42"	54"	24"

ASSUME 2000 PSF SOIL (SAND & GRAVEL WITH CLAY)

NOTES:

1. BASED ON 200 PSI STATIC PRESSURE PLUS AWWA WATER HAMMER ALLOWANCE.
2. ALL BEARING SURFACES TO BE CARRIED TO UNDISTURBED GROUND.
3. THRUST BLOCKS TO BE USED AT ALL LINES OPERATING UNDER PRESSURE.
4. CONCRETE SHALL NOT CONTACT BOLTS OR MECHANICAL FITTINGS.
5. CONCRETE SHALL BE 3000 PSI.
6. TRENCHES SHALL CONFORM WITH STANDARD EMBEDMENT DETAIL.
7. ALL BENDS AND INTERSECTIONS SHALL HAVE CONCRETE THRUST BLOCKING.
8. SEE STD. THRUST BLOCK SHEET 2 OF 4 FOR OTHER SOILS.

PSD NO. 1 - THRUST BLOCKING DETAIL
NOT TO SCALE

REACTION BEARING AREAS FOR HORIZONTAL WATER/SEWER PIPE BENDS
BASED ON TEST PRESSURE OF 200 P.S.I.
ALL AREAS GIVEN IN SQUARE FEET.

SIZE AND DEGREE OF BEND	STATIC THRUST IN POUNDS	MODERATELY DRY CLAY 4000 LBS/FT^2	SOFT CLAY 2000 LBS/FT^2	GRAVEL / COARSE SAND 1600 LBS/FT^2	DRY CLAY, ALWAYS DRY 8000 LBS/FT^2	SAND, COMPACT FIRM 8000 LBS/FT^2	SAND, CLEAN DRY 4000 LBS/FT^2	QUICKSAND, VERY POOR SOIL 1000 LBS/FT^2	ROCK, POOR 10,000 LBS/FT^2
6"									
11 1/4°	1,108	1	1	1	1	1	1	2	1
22 1/2°	2,207	1	2	2	1	1	1	3	1
45°	4,328	2	3	3	1	1	2	5	1
90°	7,996	2	4	5	1	1	2	8	1
PLUG	5,655	2	3	4	1	1	2	6	1
8"									
11 1/4°	1,970	1	1	2	1	1	1	2	1
22 1/2°	3,922	1	2	3	1	1	1	4	1
45°	7,694	2	4	5	1	1	2	8	1
90°	14,215	4	8	9	2	2	4	15	2
PLUG	10,053	3	5	6	2	2	3	10	1
12"									
11 1/4°	4,433	2	3	3	1	1	2	5	1
22 1/2°	8,826	3	5	6	2	2	3	9	1
45°	17,312	5	9	11	3	3	5	18	2
90°	31,983	8	16	19	4	4	8	32	4
PLUG	22,619	6	12	14	3	3	6	23	3
16"									
11 1/4°	7,881	2	4	5	1	1	2	8	1
22 1/2°	15,691	4	8	10	2	2	4	16	2
45°	30,779	8	16	19	4	4	8	31	4
90°	56,861	15	29	35	8	8	15	57	6
PLUG	40,213	10	21	25	5	5	10	41	5

REACTION BEARING AREAS ARE IN SQUARE FEET MEASURED IN A VERTICAL PLANE IN THE TRENCH SIDE AT AN ANGLE OF 90° TO THE THRUST VECTOR.

USE 6" - 90° BEND VALUE FOR HYDRANTS FOR ADDITIONAL SAFETY FACTOR.

PSD NO.2 - THRUST BLOCKING DESIGN QUANTITY TABLE
NOT TO SCALE

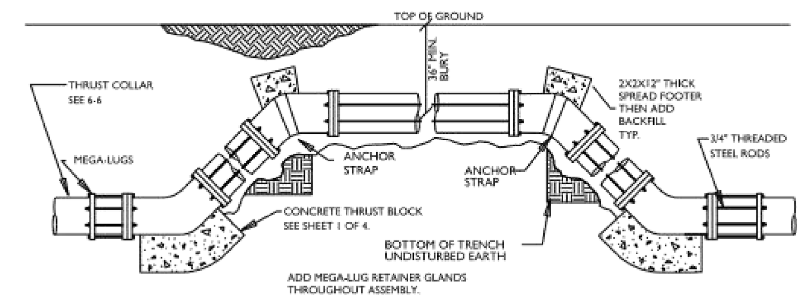

ROD REQUIREMENTS

SIZE OF 45 BEND	STATIC THRUST IN POUNDS	NO. OF RODS REQUIRED
6"	4,328	4
8"	7,694	4
12"	17,312	4
16"	30,779	8
24"	69,252	8

GENERAL NOTES:

1. STEEL RODS AND BOLTS SHALL BE 3/4" HOT OR COLD DIPPED GALVANIZED.
2. CONCRETE SHALL NOT CONTACT BOLTS OR ENDS OF MECHANICAL JOINT BENDS.
3. MEGA-LUGS TO BE USED AT ALL FITTINGS.
4. MUST USE DUCTILE IRON EYE BOLTS WHERE NECESSARY.

PSD NO. 3 - VERTICAL BEND DETAIL
NOT TO SCALE

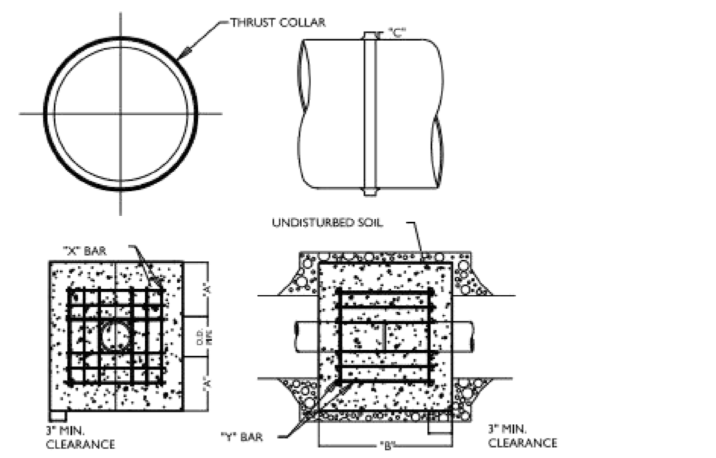

REINFORCING REQUIREMENTS

I.D. PIPE	REBAR SIZE	"X" BAR LENGTH	"X" BAR WEIGHT	"Y" BAR LENGTH	"Y" BAR WEIGHT	NO. REQUIRED
6" - 36"	#5	2'-2"+ O.D. PIPE	1.043 LBS/FT	1'-1"	1.1 LBS. EACH	X-24, Y-12
48" & greater	#6	3'-0"+ O.D. PIPE	1.502 LBS/FT	1'-3"	1.9 LBS. EACH	X-24, Y-12

THRUST COLLAR, AND THRUST SCHEDULE

I.D. PIPE	"A"	"B"	"C-6"-16", 20"-24", 30"-36", 48"
6" - 36"	1'-4"	1'-7"	2" 3" 4"
48" & greater	1'-8"	1'-9"	6"

NOTES:

1. CONCRETE SHALL BE 3000 PSI AND TRANSIT MIXED.
2. REINFORCING BARS SHALL BE DEFORMED AND TIED TOGETHER.
3. TRENCH BOTTOM WIDTH IN VICINITY OF THRUST BLOCK INSTALLATION SHALL BE THE MINIMUM WIDTH AS SHOWN ON STANDARD EMBEDMENT DETAIL.
4. BACKFILL TAMPED IN 6" LIFTS PER STANDARD EMBEDMENT DETAIL.
5. THRUST COLLAR MUST BE FACTORY WELDED ON BOTH SIDES ALONG BOTH EDGES OF COLLAR AROUND CIRCUMFERENCE.

PSD NO. 4 - THRUST COLLAR DETAIL
NOT TO SCALE

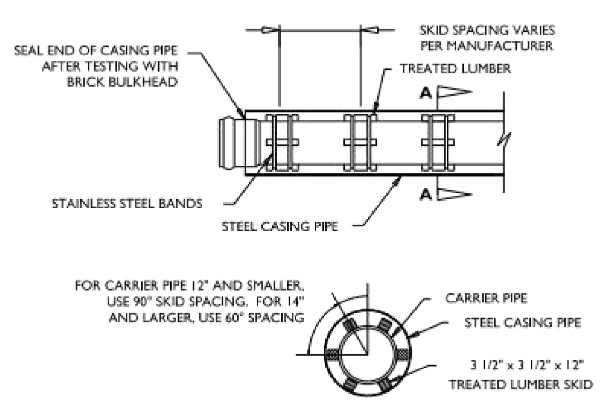

SECTION A-A
NOT TO SCALE

NOTES:
1. SKID TO BE PLACED TO PROVIDE PROPER SUPPORT, ALIGNMENT, AND GRADE AS SPECIFIED. CONTINUOUS SKIDS MAY BE USED AS ALTERNATIVE. 2. OIL, GREASE, OR PETROLEUM PRODUCT MAY NOT BE USED AS LUBRICANT.
3. CASING PIPE TO BE OF FERROUS METAL AND HAVE A MINIMUM DIAMETER TWICE THATOF THE CARRIER PIPE.
4. CASING PIPE TO HAVE A MINIMUM THICKNESS OF .25".
5. FOR ALL BORES UNDER NCDOT RIGHT OF WAYS FOLLOW ALL NCDOT GUIDELINES FOR PIPE SIZE AND THICKNESS.

PSD NO. 5 - PIPE CASING DETAIL
NOT TO SCALE

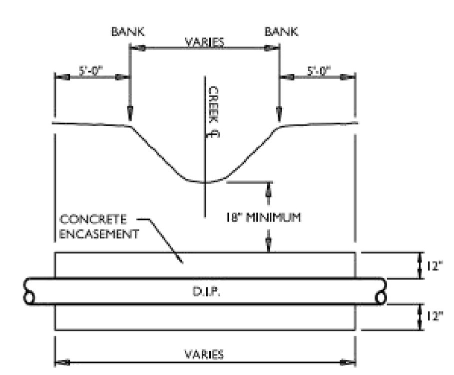

CROSS SECTION

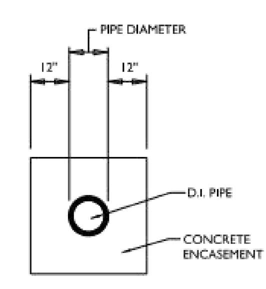

END VIEW

NOTES:

1. CONCRETE SHALL BE 3,000 P.S.I.
2. CONCRETE ENCASEMENT NOT REQUIRED WHEN PIPE IS AT LEAST THREE (3) FEET UNDER CENTERLINE OF CREEK BOTTOM.
3. ALL STREAM CROSSINGS TO BE PERMITTED BY NCDENR.
4. ALL WETLAND CROSSINGS AND COASTAL WETLAND CROSSINGS TO BE PERMITTED BY ALL APPROPRIATE AGENCIES.

PSD NO. 6 - STREAM/WETLAND CROSSING DETAIL DETAIL
NOT TO SCALE

CASING PIPE SIZE (O.D.)	WALL THICKNESS
4" - 12 3/4"	0.250"
16"	0.250"
18"	0.250"
20"	0.250"
24"	0.250"
30"	0.312"
36"	0.375"
48"	0.500"

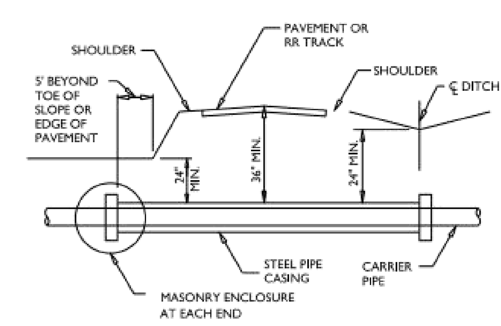

TYPICAL PIPE CROSSING

ENCASEMENTS SHALL EXTEND FROM DITCH LINE TO DITCH LINE IN CUT SECTIONS, FIVE (5) FEET BEYOND THE TOE OF SLOPES IN FILL SECTIONS, AND TEN (10) FEET BEYOND EDGE OF PAVEMENT IN SECTIONS WITH NO DITCH OR FILL AREA.

NOTES:

1. STEEL ENCASEMENT PIPE SHALL CONFORM TO ASTM A-139 WITH WALL THICKNESS AND GRADE AS DEFINED IN THE SPECIFICATIONS. MINIMUM ALLOWABLE YIELD STRENGTH IS 35,000 PSI.
2. CARRIER PIPE SHALL BE ADEQUATELY SUPPORTED THE ENTIRE LENGTH WITHIN THE CASING BY USING "SPIDER" STEEL SUPPORTS AT A MAXIMUM OF 9 FOOT CENTERS (ONE AT EACH JOINT AND ONE INTERMEDIATE). OTHER METHODS MUST MEET APPROVAL OF THE ENGINEER.
3. NO EXCAVATED MATERIAL SHALL BE PLACED IN ANY STREAM, DITCH OR DRAINAGE WAY.
4. THE CONTRACTOR IS RESPONSIBLE FOR LOCATING ALL UNDERGROUND UTILITIES PRIOR TO THE START OF CONSTRUCTION.
5. THE CONTRACTOR IS RESPONSIBLE FOR ANY SEDIMENT AND EROSION CONTROL PRACTICES REQUIRED DURING CONSTRUCTION AND THE SUBSEQUENT STABILIZATION OF ALL DISTURBED AREAS AFTER CONSTRUCTION.
6. THE CONTRACTOR IS RESPONSIBLE FOR ALL LAY DOWN AND STOCKPILE AREAS.
7. FOR BORES ON THE NCDOT RIGHT OF WAY, NO WORK WILL BEGIN UNTIL THE CONTRACTOR HAS A COPY OF THE NCDOT ENCROACHMENT PERMIT FOR THE PROJECT.

PSD NO. 7 - BORE DETAIL DETAIL
NOT TO SCALE

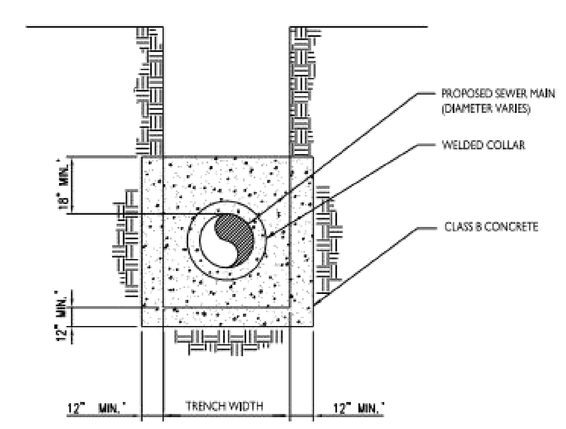

SECTION

NOTES:
1. DO NOT EXCEED 150 FEET BETWEEN COLLARS.

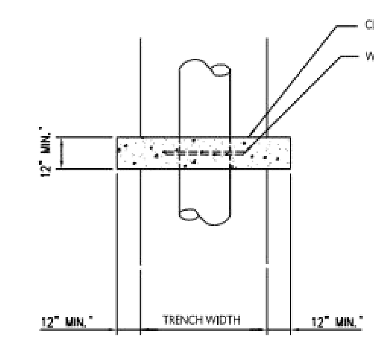

PLAN

PSD NO. 8 - ANTI SEEP COLLAR DETAIL
NOT TO SCALE

STANDARD DETAILS SHEET A

PLURIS, LLC

REV.NO.	DESCRIPTIONS	DATE
C	ISSUED FOR PERMITTING	01/21/15
B	PRELIMINARY PLAT PENDER CO. REVIEW	10/10/14
A	75% CONSTRUCTION DOCUMENTS TO TLC FOR REVIEW	08/11/14

REVISIONS

SEAL
PRELIMINARY- DO NOT USE FOR CONSTRUCTION

SEAL
NORTH CAROLINA PROFESSIONAL SEAL 038577 ENGINEER RICHARD A. CHRISTENSEN
01-21-15

McKIM&CREED
243 North Front Street
Wilmington, North Carolina 28401
Phone: (910)343-1048, Fax: (910)251-8282
NC LIC. No. F-1222
www.mckimcreed.com

Trask Land CO INC
1202 Eastwood Road
Wilmington, NC 28403
(910) 799-8755

BLAKE FARM — EST 1946 —

BLAKE FARM
TOPSAIL TOWNSHIP
PENDER COUNTY NORTH CAROLINA

UTILITY DETAILS

DATE:	9 JANUARY 2015
MCE PROJ. #	6525-0001
DRAWN	CDN
DESIGNED	RAC
CHECKED	RAM
PROJ. MGR.	RAM

SCALE
HORIZONTAL: N/A
VERTICAL: N/A

M&C FILE NUMBER
CU502
DRAWING NUMBER
54

STATUS: FINAL PLAN NOT FOR CONSTRUCTION
REVISION C

S:\6525\0001\80-Drawings\CU502_065250001.dwg, 1/28/2015 11:43:38 AM, cnursey

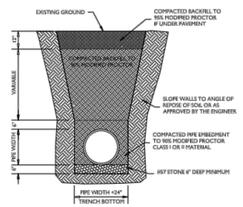

NOTES:
1. MINIMUM BURY DEPTH FOR ALL FORCE MAINS AND GRAVITY LINES IS 36" UNLESS SPECIFICALLY ALLOWED BY THE ENGINEER. ALL LINES SHALLOWER THAN 36" MUST GIVE CONSIDERATION TO USING HIGHER PRESSURE AND THICKNESS CLASSES OF DIP.
2. ALL LINES TO BE BEDDED IN 6" OF #57 STONE MINIMUM. FOR LINES INSTALLED BELOW THE WATER TABLE #57 STONE SHOULD EXTEND TO THE SPRING LINE OF THE PIPE AT A MINIMUM.
3. THE USE OF #57 STONE BEDDING AND BACKFILL SHOULD BE COMMENSURATE WITH THE CONDITIONS IN THE TRENCH. THE CONTRACTOR IS RESPONSIBLE FOR PROPER BEDDING AND BACKFILLING TO INSURE PIPE STABILITY AND UNIFORM GRADE.

PSD NO. 9 - PIPE TRENCH AND BEDDING DETAIL
NOT TO SCALE

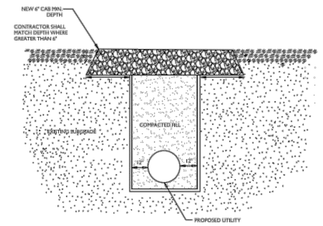

NOTES:
1. THE REPLACED STONE SHALL CONSIST OF ABC MATERIAL COMPACTED TO A DENSITY EQUAL TO 100% OF THAT OBTAINED BY COMPACTING A SAMPLE OF THE MATERIAL IN ACCORDANCE WITH ASSHTO T-80 AS MODIFIED BY NCDOT.

PSD NO. 10 - GRAVEL DRIVEWAY REPAIR DETAIL
NOT TO SCALE

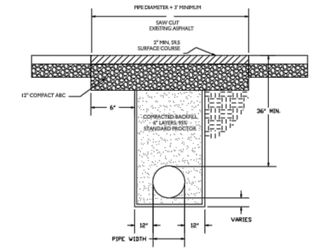

NOTES:
1. THE PAVEMENT SHALL BE DEFINED BY A STRAIGHT EDGE, PREFERABLY A MACHINED SAW CUT.
2. THE TRENCH SUBGRADE MATERIAL SHALL BE BACKFILLED WITH DRY SOIL OR ABC STONE USING ALLOWANCE OF 6" LIFTS TO WITHIN 12" OF THE ROAD SURFACE. THE SOIL SHALL BE COMPACTED PER ASTM D698 TO A DENSITY OF 95% OF THE STANDARD PROCTOR DENSITY.
3. WITHIN ROADS MAINTAINED BY NCDOT, THE TRENCH SHALL BE BACKFILLED AND COMPACTED USING FLOWABLE FILL OR ABC STONE TO WITHIN 12" OF THE ROAD SURFACE. WHERE ABC STONE IS USED, IT SHALL BE COMPACTED TO A DENSITY OF AT LEAST 95% OF THAT OBTAINED BY COMPACTING A SAMPLE OF THE MATERIAL IN ACCORDANCE WITH ASSHTO T-180 AS MODIFIED BY NCDOT.
4. THE FINAL 12" OF FILL SHALL CONSIST OF ABC MATERIAL COMPACTED TO A DENSITY EQUAL TO 100% OF THAT OBTAINED BY COMPACTING A SAMPLE OF THE MATERIAL IN ACCORDANCE WITH ASSHTO T-180 AS MODIFIED BY NCDOT. BITUMINOUS BASE OR BINDER MAY BE SUBSTITUTED IF APPROVED BY THE ENGINEER.
5. THE ENTIRE THICKNESS/VERTICAL EDGE OF THE CUT SHALL BE TACKED.
6. THE SAME DEPTH OF PAVEMENT MATERIAL WHICH EXISTS SHALL BE REINSTALLED, BUT IN NO CASE SHALL THE ASPHALT BE LESS THAN 3" THICK.
7. THE ASPHALT PAVEMENT MATERIAL SHALL BE INSTALLED AND COMPACTED THOROUGHLY TO ACHIEVE A SMOOTH LEVEL PATCH.

PSD NO. 11 - ASPHALT PAVING REPAIR DETAIL
NOT TO SCALE

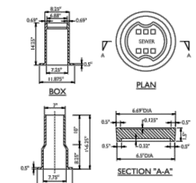

MINIMUM WEIGHTS:
TOP 40 LBS.
BOX 40 LBS.
EXTENSION 40 LBS.

NOTE:
VALVE BOX LID NOT FOR USE IN ROADWAY LOCATIONS. HEAVY DUTY LID REQUIRED. SEE SD 14-08.

PSD NO. 12 - CAST IRON VALVE BOX DETAIL
NOT TO SCALE

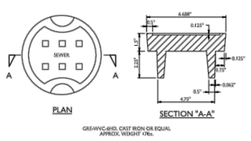

GREYHYC-@HD, CAST IRON OR EQUAL
APPROX. WEIGHT 17lbs.

PSD NO. 13 - HEAVY DUTY CAST IRON VALVE BOX LID DETAIL
NOT TO SCALE

NOTE: CONCRETE VALVE PAD REQUIRED ON ALL VALVES.

APPROVED METHOD FOR EXTENSION OF VALVE BOX

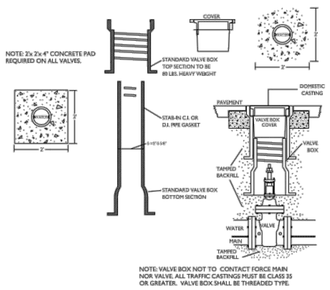

NOTE: VALVE BOX NOT TO CONTACT FORCE MAIN NOR VALVE. ALL TRAFFIC CASTINGS MUST BE CLASS 35 OR GREATER. VALVE BOX SHALL BE THREADED TYPE.

PSD NO. 14 - VALVE BOX INSTALLATION AND EXTENSION DETAIL
NOT TO SCALE

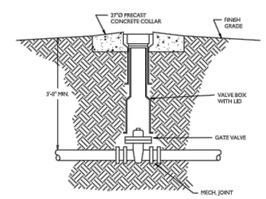

PSD NO. 15 - GATE VALVE DETAIL
NOT TO SCALE

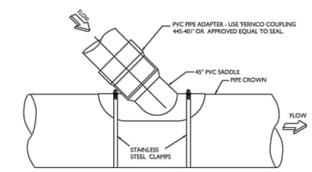

BACKFILL UNDER PVC SADDLE, ADAPTOR, AND PIPE BEND WITH #57 STONE AS SHOWN ON PIPE EMBEDMENT DETAIL.

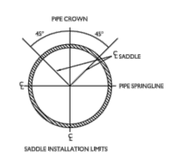

NOTE:
USE AT DEPTHS FROM 3 TO 6-FEET

PSD NO. 16 - SADDLE INSTALLATION DETAIL
NOT TO SCALE

STANDARD DETAILS SHEET B

PLURIS, LLC

REV.NO.	DESCRIPTIONS	DATE
C	ISSUED FOR PERMITTING	01/21/15
B	PRELIMINARY PLAT PENDER CO. REVIEW	10/10/14
A	75% CONSTRUCTION DOCUMENTS TO TLC FOR REVIEW	08/15/14

REVISIONS

SEAL
PRELIMINARY - DO NOT USE FOR CONSTRUCTION

SEAL
NORTH CAROLINA PROFESSIONAL SEAL 038577 ENGINEER RICHARD A. MEHLMAN
01-21-15

McKIM&CREED
243 North Front Street
Wilmington, North Carolina 28401
Phone: (910)343-1048, Fax: (910)251-8282

NC LIC. No. F-1222
www.mckimcreed.com

Trask Land CO INC
1202 Eastwood Road
Wilmington, NC 28403
(910) 799-8755

BLAKE FARM
TOPSAIL TOWNSHIP
PENDER COUNTY NORTH CAROLINA

UTILITY DETAILS

DATE:	9 JANUARY 2015
MCE PROJ. #	6525-0001
DRAWN	CDN
DESIGNED	RAC
CHECKED	RAM
PROJ. MGR.	RAM

SCALE
HORIZONTAL: N/A
VERTICAL: N/A

M&C FILE NUMBER: CU503
DRAWING NUMBER: 55

STATUS: FINAL PLAN
NOT FOR CONSTRUCTION
REVISION: C

S:\6525\0001\Bt-Drawings\CU503_065250001.dwg, 1/28/2015 11:43:50 AM, cmursey

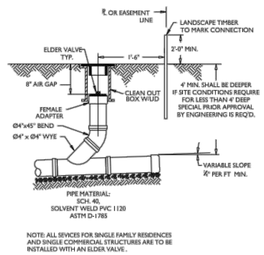

PSD NO. 17A - STANDARD SERVICE CLEAN OUT DETAIL
NOT TO SCALE

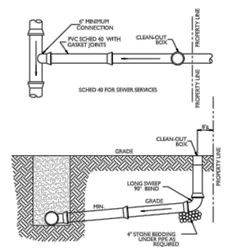

PSD NO. 17 - STANDARD SERVICE DETAIL
NOT TO SCALE

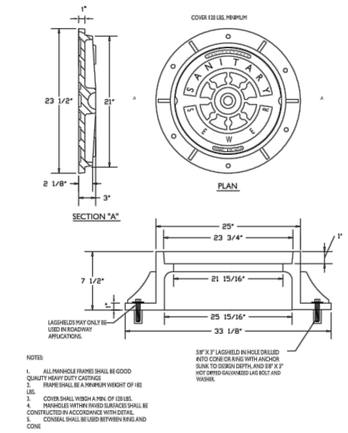

PSD NO. 18 - STANDARD MANHOLE RING AND COVER DETAIL
NOT TO SCALE

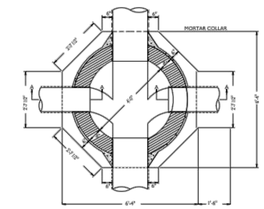

PSD NO. 19 - SANITARY SEWER MANHOLE PLAN VIEW DETAIL
NOT TO SCALE

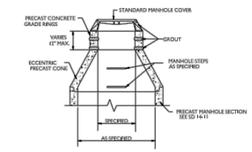

PSD NO. 20 - SANITARY SEWER PRECAST RING EXTENSION DETAIL
NOT TO SCALE

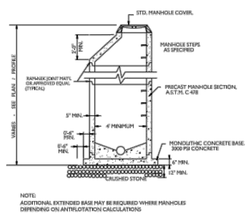

PSD NO. 21 - SANITARY SEWER PRECAST MANHOLE DETAIL
NOT TO SCALE

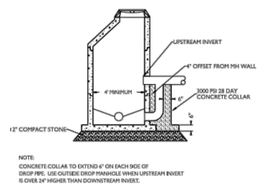

PSD NO. 22 - OUTSIDE DROP MANHOLE DETAIL
NOT TO SCALE

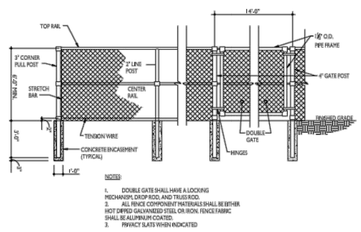

PSD NO. 23 - LIFT STATION FENCING DETAIL
NOT TO SCALE

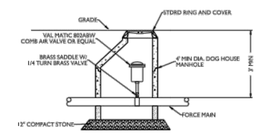

PSD NO. 24 - AIR RELEASE MANHOLE DETAIL
NOT TO SCALE

STANDARD DETAILS SHEET C

PLURIS, LLC

REV.NO.	DESCRIPTIONS	DATE
C	ISSUED FOR PERMITTING	01/21/15
B	PRELIMINARY PLAT PENDER CO. REVIEW	10/10/14
A	75% CONSTRUCTION DOCUMENTS TO T.L.C FOR REVIEW	08/11/14

REVISIONS

SEAL
PRELIMINARY - DO NOT USE FOR CONSTRUCTION

SEAL
NORTH CAROLINA PROFESSIONAL SEAL 038577 ENGINEER RICHARD A. MEHEN
01-21-15

McKIM&CREED
243 North Front Street
Wilmington, North Carolina 28401
Phone: (910)343-1048, Fax: (910)251-8282

NC LIC. No. F-1222
www.mckimcreed.com

Trask Land CO INC
1202 Eastwood Road
Wilmington, NC 28403
(910) 799-8755

BLAKE FARM
EST. 1946

BLAKE FARM
TOPSAIL TOWNSHIP
PENDER COUNTY NORTH CAROLINA

UTILITY DETAILS

DATE:	9 JANUARY 2015
MCE PROJ. #	6525-0001
DRAWN	CDN
DESIGNED	RAC
CHECKED	RAM
PROJ. MGR.	RAM

SCALE
HORIZONTAL: N/A
VERTICAL: N/A

M&C FILE NUMBER: CU504
DRAWING NUMBER: 56

STATUS: FINAL PLAN NOT FOR CONSTRUCTION
REVISION: C

S:\6525\0001\BD-Drawings\CU504_06525001.dwg, 1/28/2015 11:44:01 AM, cruisey

LEGEND	
▽ ▽ ▽ ▽	SHALLOW LAND ZONE
(pattern)	SHALLOW WATER ZONE
(pattern)	DEEP POOL AND FOREBAY ZONE

CONSTRUCTED WETLAND #1
SCALE: 1" = 30'

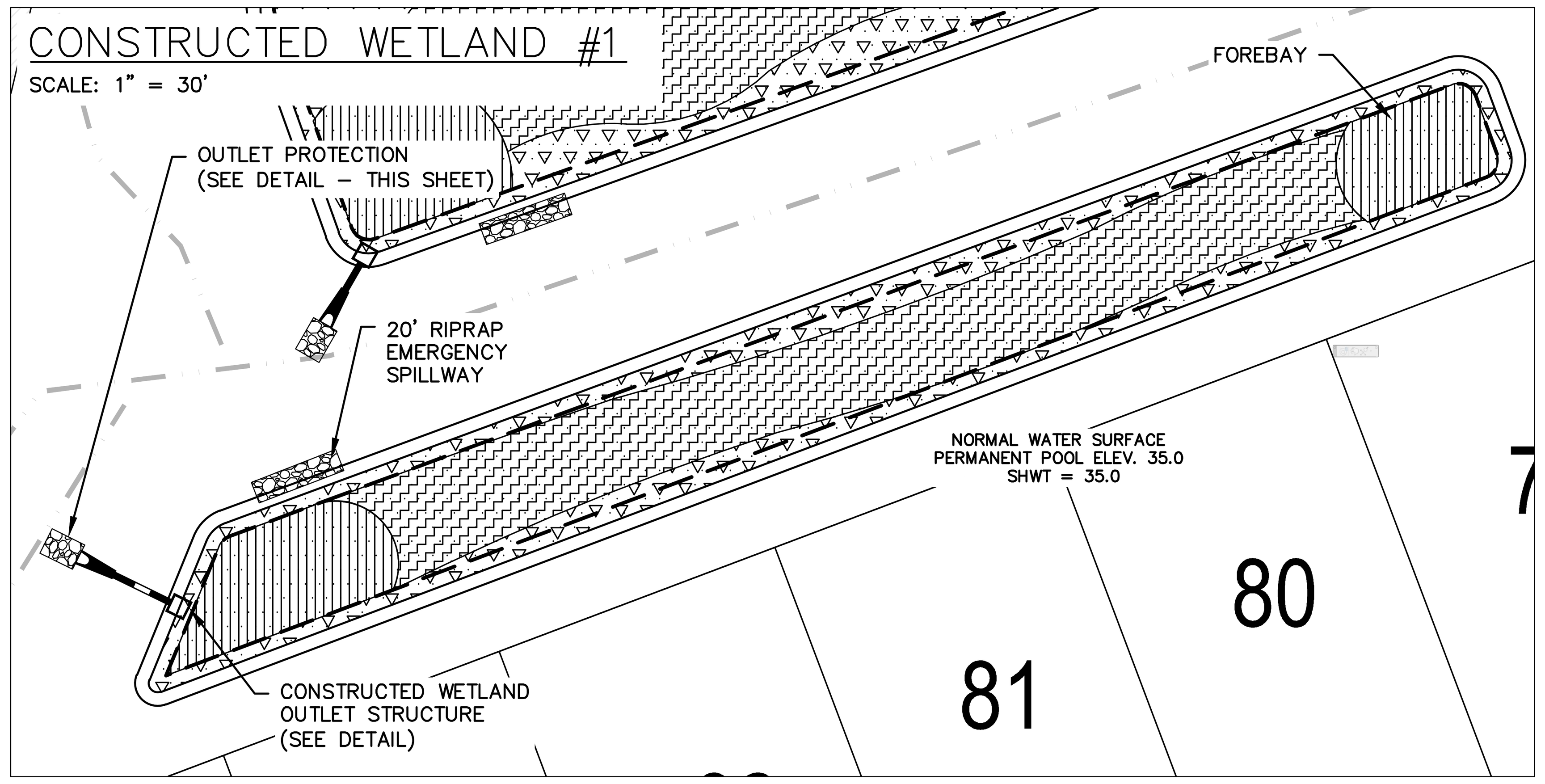

CONSTRUCTED WETLAND #2
SCALE: 1" = 30'

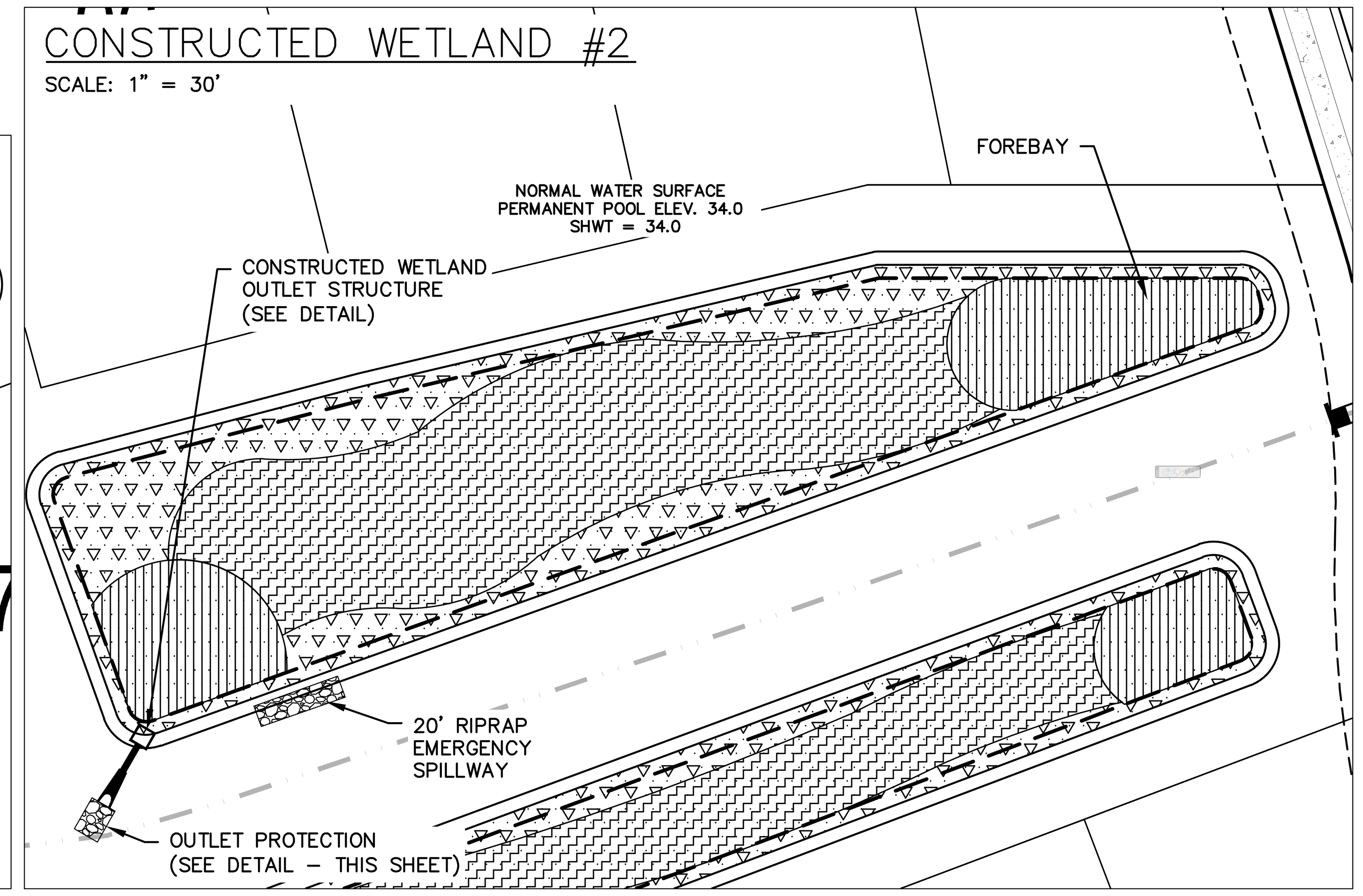

CONSTRUCTED WETLAND #3
SCALE: 1" = 30'

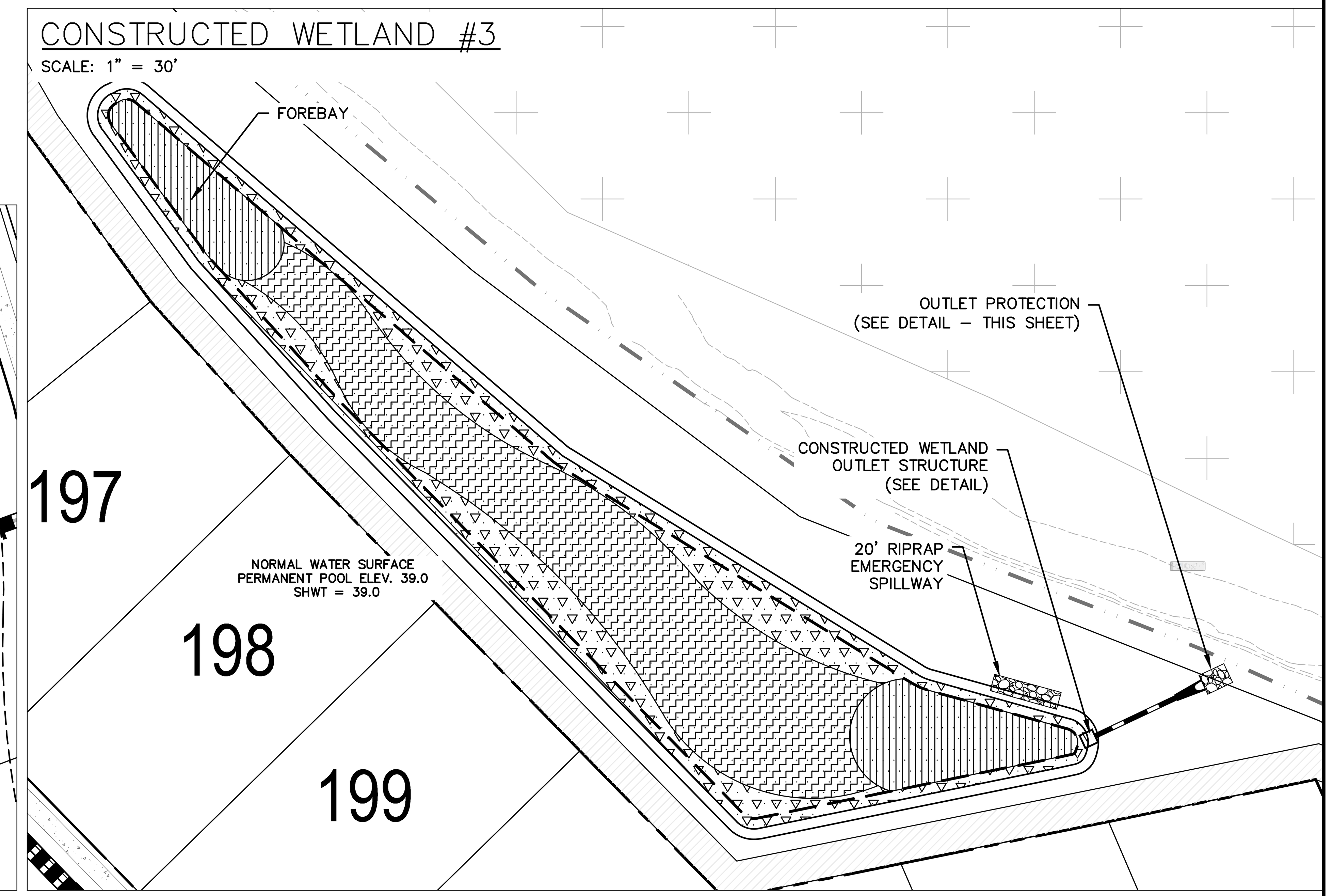

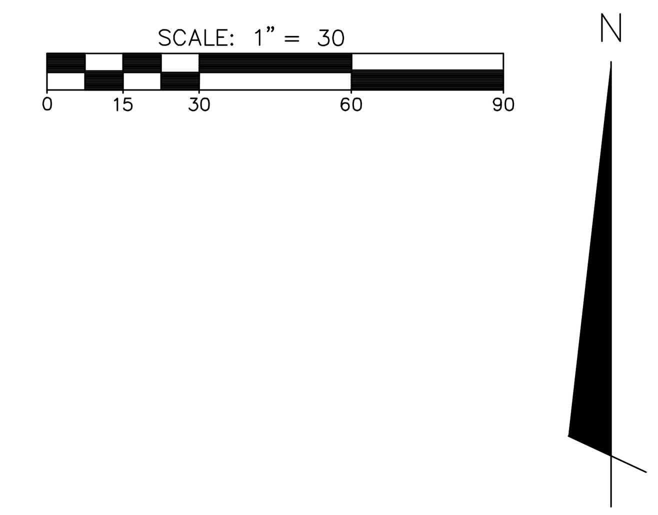

TOPSOIL SPECIFICATIONS

TOPSOIL TO BE ADDED TO TOP OF CONSTRUCTED WETLAND SHELF IF NATIVE SOILS ARE NOT SUITABLE FOR GROWTH OF SELECTED PLANT SPECIES.

TOPSOIL SHALL BE WELL MIXED, FREE OF TRASH AND DEBRIS, UNCOMPACTED, AND VOID OF LARGE (>2 INCHES) AND WOODY MATERIAL (>3 INCHES).

TOPSOIL SHALL MEET THE FOLLOWING SPECIFICATIONS:
- SOIL TYPE: CLAY < 60%, SAND < 80%, SILT < 80%
- ORGANIC CONTENT: 5–8%
- P–I: 20<50
- pH: 6.0–7.0

IN THE EVENT THAT SELECTED TOPSOIL DOES NOT MEET SPECIFICATION LISTED ABOVE, SOIL CAN BE AMENDED BY ADDITION OF APPROPRIATE MATERIALS.

UPON PLACEMENT OF TOPSOIL, AREA SHOULD BE LIGHTLY COMPACTED TO ENSURE STABILIZATION OF MATERIAL.

EXCESSIVE TRAFFICKING OF EQUIPMENT OVER CONSTRUCTED WETLAND PLANTING AREAS SHOULD BE AVOIDED.

MINIMUM DEPTH OF TOPSOIL SHOULD BE 12 INCHES.

GENERAL PLANTING NOTES:

PREVENT FROM COMPACTING TOPSOIL, TO PROMOTE HEALTHY ENVIRONMENTAL CONDITIONS FOR THE PLANTS.

PLANTS OF THE SAME SPECIES SHOULD BE PLANTED IN CLUSTERS, THESE CLUSTERS SHOULD CONTAIN 4–6 PLANTS OF THAT SPECIES.

ALL PLANTS SHOULD BE PLANTED IN THE SPECIFIED ZONE TO ENSURE SURVIVAL.

AVOID PLANTING INDIVIDUAL SPECIES IN LARGE GROUPS BY SPACING CLUSTERS A MIN. OF 5' APART.

ALL ZONES TO BE PLANTED WITH BARE ROOT, PLUGS, OR CONTAINER LIVE PLANTINGS AS SPECIFIED

SEE PLANTING DETAIL FOR PLACEMENT OF PLANTS.

BEGIN PLANTING DURING LOCAL GROWING SEASON IN ORDER TO ENSURE THAT PLANTS HAVE ADAQUET TIME TO ESTABLISH BEFORE WINTER MONTHS.

FRESH PLANTS WILL BE OBTAINED FROM A NURSERY AND WILL BE STORED WITH ROOTS IN MOIST SOILS.

PLANTINGS WILL BE INSPECTED AND MAINTAINED. PLANTS WILL BE INSPECTED FOR WASHOUT. WASHED OUT PLANTS WILL BE REPLACED.

A SUITABLE STAND OF WETLAND PLANTS WILL BE ESTABLISHED WITHIN 8 MONTHS OF PLANTING. A 90% SURVIVAL RATE MEETS THIS OBJECTIVE. SUPPLEMENTAL PLANTINGS WILL BE PROVIDED AS NEEDED TO MEET THIS CRITERIA.

THE SPECIFIED PLANT MATERIALS MAY BE OBTAINED FROM ANY NURSERY, INCLUDING: COASTAL PLAIN CONSERVATION NURSERY, 3067 CONNERS DR. EDENTON, NC 27932. (252) 482–5707.

TEMPORARY SEEDING

GRASS TYPE	AMOUNT/ 1000 S.F.	TIME OF SEEDING	INITIAL
RYE GRAIN	1–2 LBS.	APRIL – JUNE	25 LBS. 10–10–10
BROWNTOP MILLET	1–2 LBS	JUNE – AUGUST	25 LBS 10–10–10

PERMANENT SEEDING

GRASS TYPE	AMOUNT/ 1000 S.F.	TIME OF SEEDING	INITIAL
BERMUDA, COMMON	1–2 LBS.	APRIL – JUNE	25 LBS. 10–10–10
FESCUE, TALL (KENTUCKY 31)	5–7 LBS	JUNE – AUGUST FEB. – OCT.	25 LBS 10–10–10
SERICEA LESPEDEZA (SLOPES	1–2 LBS	MARCH – APRIL	25 LBS 10–10–10

SEEDBED PREPARATION

CHISEL COMPACTED AREAS AND SPREAD TOPSOIL 3 INCHES DEEP OVER ADVERSE SOIL CONDITIONS, IF AVAILABLE.

RIP THE ENTRANCE AREA TO 6 INCHES DEPTH.

REMOVE ALL LOOSE ROCK, ROOTS, AND OTHER OBSTRUCTIONS LEAVING SURFACE REASONABLY SMOOTH AND UNIFORM.

APPLY AGRICULTURAL LIME, FERTILIZER, AND SUPER PHOSPHATE UNIFORMLY AND MIX WITH SOIL (SEE BELLOW).

CONTINUE TILLAGE UNTIL A WELL – PULVERIZED, FIRM, REASONABLY UNIFORM SEEDBED IS PREPARED 4 TO 6 INCHES DEEP.

SEED ON A FRESHLY PREPARED SEEDBED AND COVER SEED LIGHTLY WITH SEEDING EQUIPMENT OR CULTIPACK AFTER SEEDING.

MULCH IMMEDIATELY AFTER SEEDING AND ANCHOR MULCH.

INSPECT ALL SEEDED AREAS AND MAKE NECESSARY REPAIRS OR RESEEDINGS WITHIN THE PLANTING SEASON, IF POSSIBLE. IF STAND SHOULD BE OVER 60% DAMAGED, REESTABLISH FOLLOWING ORIGINAL LIME, FERTILIZER AND SEEDING RATES.

CONSULT CONSERVATION INSPECTOR ON MAINTENANCE TREATMENT AND FERTILIZATION AFTER PERMANENT COVER IS ESTABLISHED.

* APPLY: AGRICULTURAL LIMESTONE – 2 TONS/ACRE
FERTILIZER – 1000 LBS/ACRE (10–10–10)
SUPER PHOSPHATE – 500 LBS/ACRE (20%)
MULCH – 2 TONS/ACRE (SMALL GRAIN STRAW)
ANCHOR – ASPHALT EMULSION AT 450 GAL

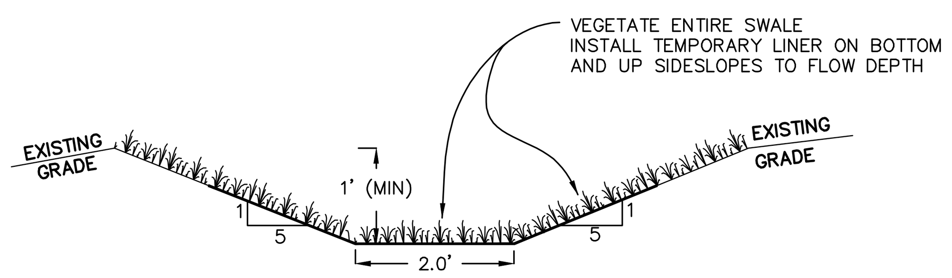

VEGETATED SWALE
NOT TO SCALE

NOTES
1. OVER–EXCAVTE CHANNEL DEPTH 0.5' TO ALLOW FOR SOIL BULKING (DURING SEEDBED PREP) AND SOD/VEGETATIVE ACCUMULATION.
2. VEGETATE SWALES ACCORDING TO SEEDING SCHEDULE IMMEDIATELY UPON COMPLETION.
3. THE TEMPORARY LINER SHALL BE PLACED ON THE BOTTOM AND UP THE SIDESLOPES TO THE SPECIFIED FLOW DEPTH; MULCH ACCORDING TO SEEDING SCHEDULE ABOVE THAT HEIGHT.
4. THE TEMPORARY LINER SHALL BE JUTE NET OR STRAW MATTING.
5. FOLLOW MANUFACTURERS INSTRUCTIONS WHEN INSTALLING TEMPORARY LINER.

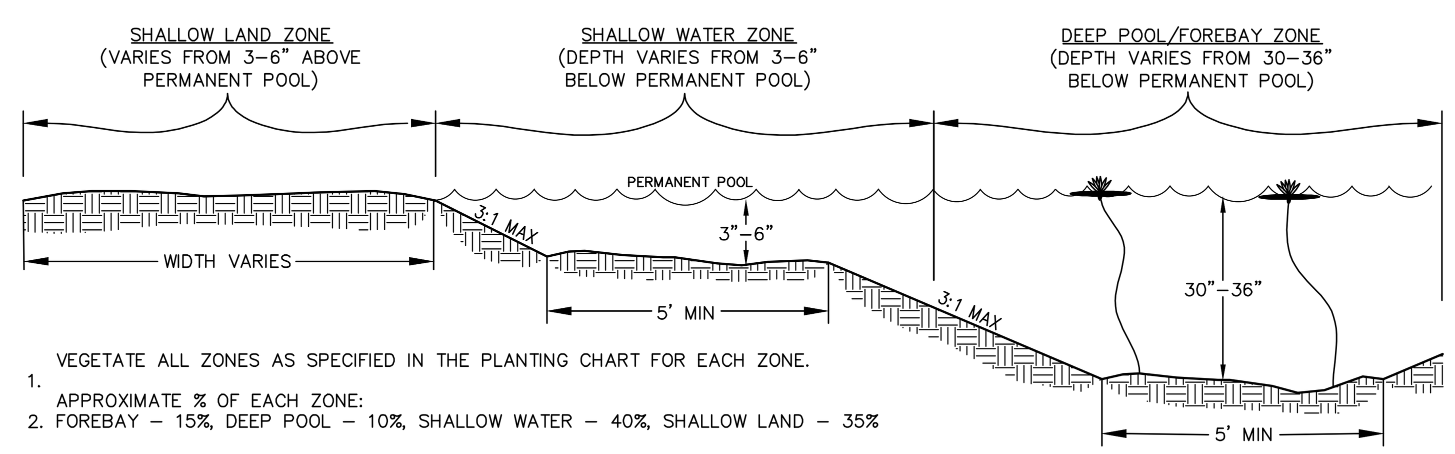

1. VEGETATE ALL ZONES AS SPECIFIED IN THE PLANTING CHART FOR EACH ZONE.
2. APPROXIMATE % OF EACH ZONE: FOREBAY – 15%, DEEP POOL – 10%, SHALLOW WATER – 40%, SHALLOW LAND – 35%

CONSTRUCTED WETLAND ZONES
NOT TO SCALE

CONSTRUCTED WETLAND OUTFALL PROTECTION			
	WETLAND 1	WETLAND 2	WETLAND 3
OUTLET PIPE DIA.	12"	12"	15"
OUTLET FLOW RATE	2.72 CFS	1.57 CFS	3.97 CFS
OUTLET VELOCITY	5.0 FT/S	4.4 FT/S	5.5 FT/S
MATERIAL	CLASS A	CLASS A	CLASS A
LENGTH	4.0'	4.0'	5.0'
WIDTH	3'	3'	3.25'
STONE DIA.	3"	3"	3"
THICKNESS	9"	9"	9"

* OUTFALL PIPE DIAMETER REFERS TO PIPE SIZE DOWNSTREAM OF CONFLUENCE IN MANHOLE.

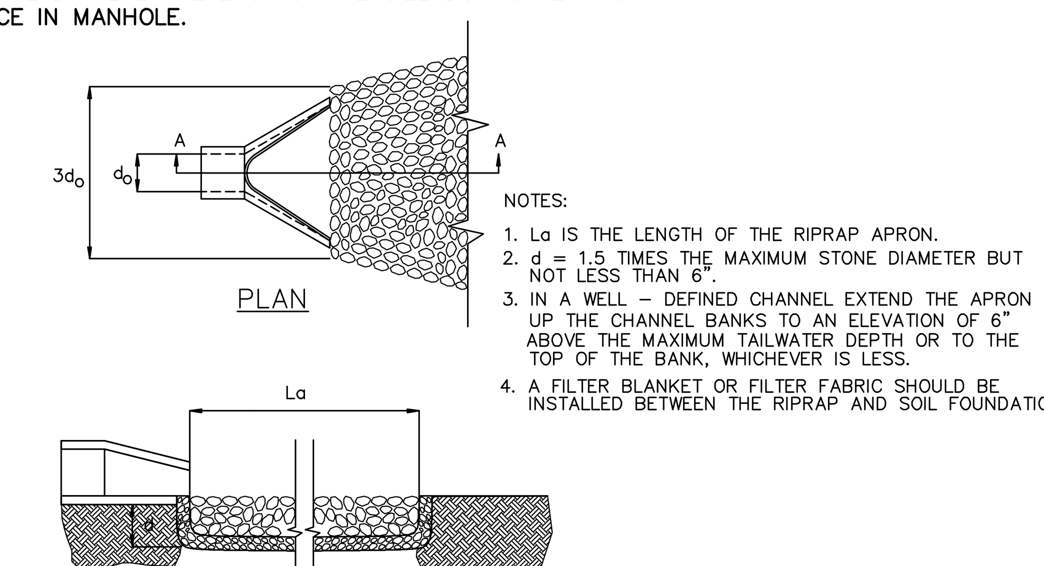

NOTES:
1. La IS THE LENGTH OF THE RIPRAP APRON.
2. d = 1.5 TIMES THE MAXIMUM STONE DIAMETER BUT NOT LESS THAN 6".
3. IN A WELL – DEFINED CHANNEL EXTEND THE APRON UP THE CHANNEL BANKS TO AN ELEVATION OF 6" ABOVE THE MAXIMUM TAILWATER DEPTH OR TO THE TOP OF THE BANK, WHICHEVER IS LESS.
4. A FILTER BLANKET OR FILTER FABRIC SHOULD BE INSTALLED BETWEEN THE RIPRAP AND SOIL FOUNDATION.

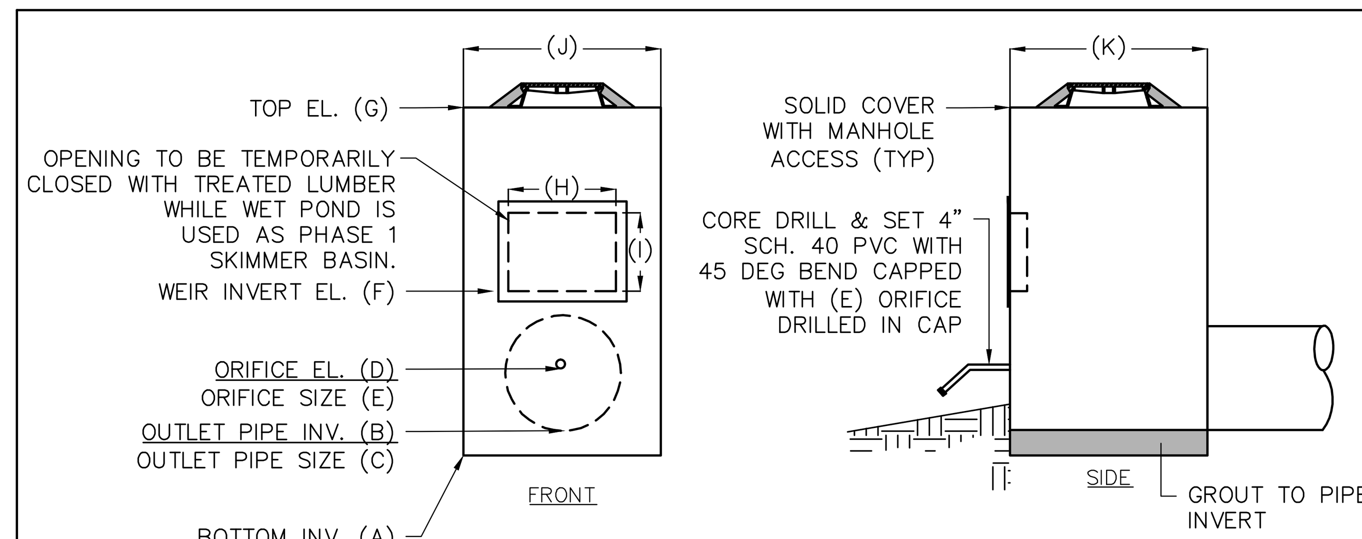

WETLAND OUTLET STRUCTURE
NOT TO SCALE

CONSTRUCTED WETLAND OUTLET STRUCTURE			
	WETLAND 1	WETLAND 2	WETLAND 3
A	34.5'	34.5'	38.5'
B	35.0'	35.0'	39.0'
C	12" RCP	12" RCP	15" RCP
D	35.0'	35.0'	39.0'
E	1.0"	1.0"	1.2"
F	35.3'	35.5'	39.5'
G	36.0'	36.0'	40.0'
H	24"	24"	24"
I	6"	6"	6"
J	36"	36"	36"
K	36"	36"	36"
L	36.5'	36.5'	40.5'
M	37.0'	37.0'	41.0'

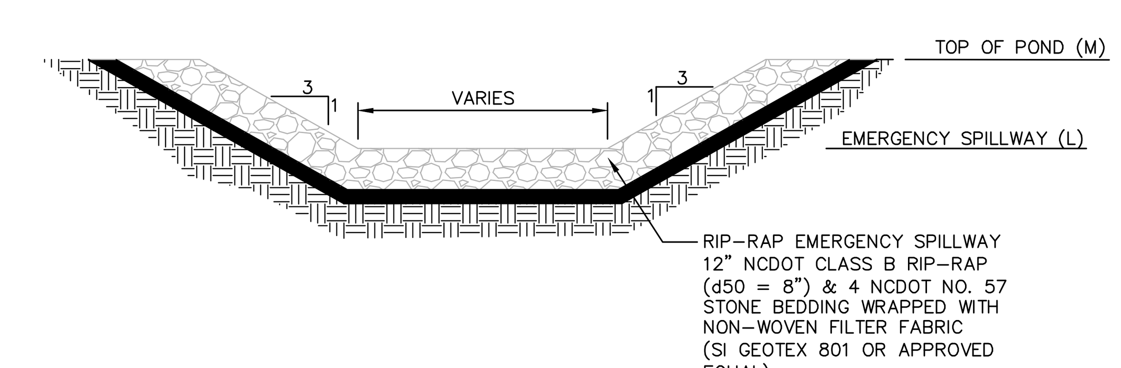

EMERGENCY SPILLWAY SECTION
NOT TO SCALE

REV.NO.	DESCRIPTIONS	DATE
C	ISSUED FOR PERMITTING	01/21/15
B	PRELIMINARY PLAT PENDER CO. REVIEW	10/10/14
A	75% CONSTRUCTION DOCUMENTS TO TLC FOR REVIEW	08/11/14

REVISIONS

SEAL
PRELIMINARY- DO NOT USE FOR CONSTRUCTION

SEAL
NORTH CAROLINA PROFESSIONAL SEAL 038577 ENGINEER RICHARD A. CHRISTENSEN 01-21-15

McKIM&CREED
243 North Front Street
Wilmington, North Carolina 28401
Phone: (910)343-1048, Fax: (910)251-8282
NC LIC. No. F-1222
www.mckimcreed.com

Trask Land CO INC
1202 Eastwood Road
Wilmington, NC 28403
(910) 799-8755

BLAKE FARM – EST 1946 –

BLAKE FARM
TOPSAIL TOWNSHIP
PENDER COUNTY NORTH CAROLINA

CONSTRUCTED WETLAND DETAILS

DATE:	9 JANUARY 2015
MCE PROJ. #	6525-0001
DRAWN	CDN
DESIGNED	RAC
CHECKED	RAM
PROJ. MGR.	RAM

SCALE
HORIZONTAL: 1"=30'
VERTICAL: N/A

M&C FILE NUMBER CN501
DRAWING NUMBER 57

STATUS: FINAL PLAN NOT FOR CONSTRUCTION
REVISION C

S:\6525\0001\80-Drawings\CN501_065250001.dwg, 1/27/2015 8:13:07 PM, cnursey

WET DETENTION POND NOTES

1) TEMPORARY PUMP WILL BE PROVIDED BY OWNER TO DRAIN POND/FOREBAY FOR ROUTINE MAINTENANCE OR IN AN EMERGENCY.

2) CONTRACTOR SHALL INSTALL EQUAL NUMBERS OF THE LISTED SUITABLE SPECIES FOR THE VEGETATED SHELF. GROUP SIMILAR SPECIES OF PLANTS TOGETHER, INSTALL PLANTS 24" O.C. IN A CHECKERBOARD PATTERN, AND NO PLANTS SHALL BE PLANTED WITHIN 10 FT OF THE OUTLET STRUCTURE. LISTED SUITABLE SPECIES FOR VEGETATED SHELF ARE: **ARROW ARUM, BLUE FLAG IRIS, CANA LILY, AND PICKEREL WEED.**

3) SOD SLOPES ABOVE THE PERMANENT POOL AROUND THE INSIDE OF THE FOREBAY, ABOVE THE VEGETATED SHELF AROUND THE MAIN BAY AND SLOPES OUTSIDE OF THE POND.

4) CONTRACTOR SHALL EXCAVATE VEGETATED SHELF AS NECESSARY TO PROVIDE ADEQUATE CLEARANCE AROUND RISER FOR PVC PIPE INVERT.

5) THE SEASONAL HIGH WATER TABLE WAS FOUND TO BE ~ EL. 36.69 IN MAIN BAY 1 AND EL. 37.00 IN MAIN BAY 2 OF THE WET DETENTION POND.

GENERAL NOTES

1. CONTRACTOR SHALL VERIFY LOCATIONS OF EXISTING UTILITIES.
2. BASED ON FIRM FLOOD INSURANCE RATE MAP FOR PENDER COUNTY, THIS PARCEL IS NOT LOCATED IN A FLOOD HAZARD ZONE.
3. THE IMPROVEMENTS SHOWN ON THIS SITE PLAN CANNOT DEVIATE FROM THE PLAN ONCE APPROVED WITHOUT WRITTEN APPROVAL OF ENGINEER.
4. SITE WILL REQUIRE A STATE EROSION CONTROL PERMIT AND STATE STORMWATER PERMIT.
5. IMPERVIOUS AREA SHALL DRAIN TO PROPOSED STATE PERMITTED STORMWATER POND.
6. SURVEY INFORMATION PROVIDED BY MCKIM & CREED.

WET POND #1

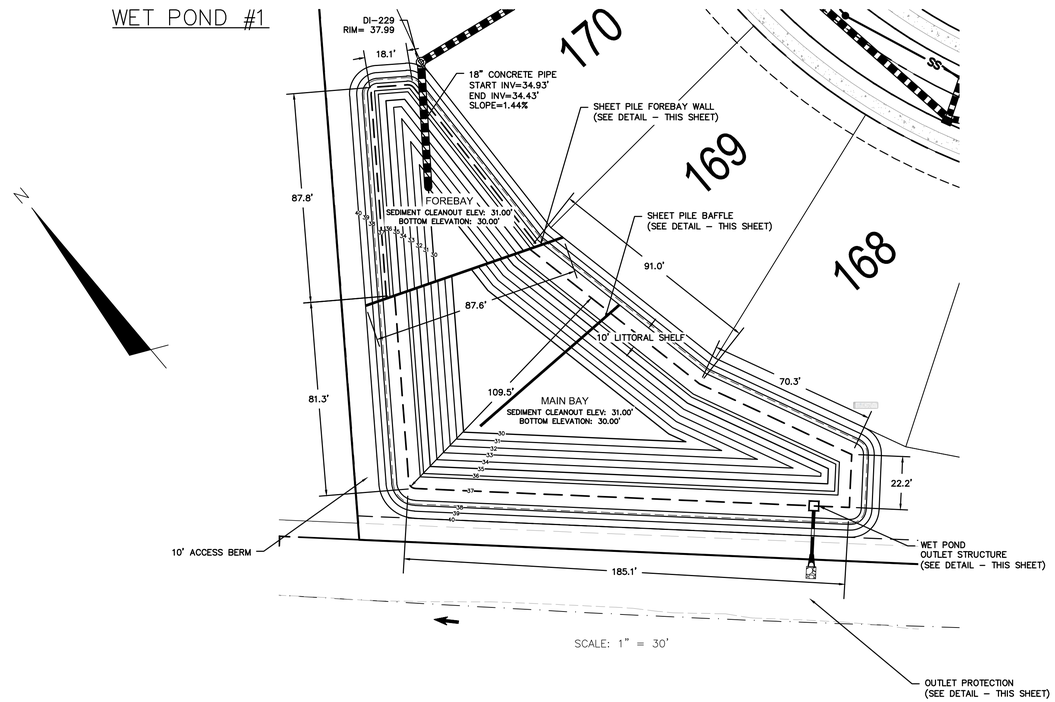

OUTLET PROTECTION	
OUTLET PIPE DIA.	15"
OUTLET FLOW RATE	0.13 CFS
OUTLET VELOCITY	1.38 FT/S
MATERIAL	CLASS A
LENGTH	5.0'
WIDTH	3.8'
STONE DIA.	3"
THICKNESS	9"

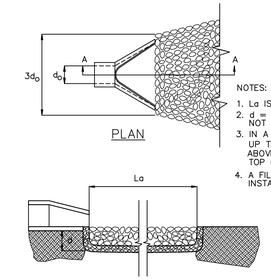

PLAN

NOTES:
1. La IS THE LENGTH OF THE RIPRAP APRON.
2. d = 1.5 TIMES THE MAXIMUM STONE DIAMETER BUT NOT LESS THAN 6".
3. IN A WELL – DEFINED CHANNEL EXTEND THE APRON UP THE CHANNEL BANKS TO AN ELEVATION OF 6" ABOVE THE MAXIMUM TAILWATER DEPTH OR TO THE TOP OF THE BANK, WHICHEVER IS LESS.
4. A FILTER BLANKET OR FILTER FABRIC SHOULD BE INSTALLED BETWEEN THE RIPRAP AND SOIL FOUNDATION.

PIPE OUTLET PROTECTION
NOT TO SCALE

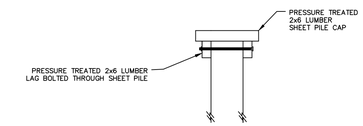

VINYL SHEET PILE CAP
NOT TO SCALE

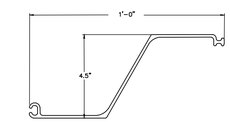

VINYL SHEET PILE FOR BAFFLE AND FOREBAY WALL
NOT TO SCALE

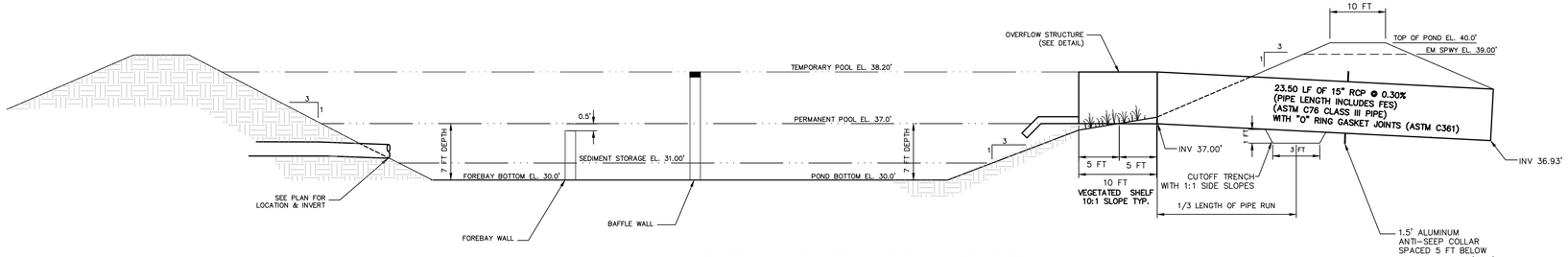

FOREBAY AND STORAGE POND SECTION
NOT TO SCALE

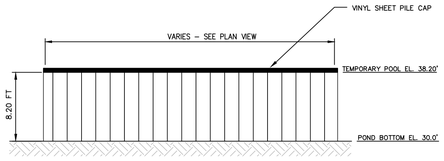

VINYL SHEET PILE BAFFLE WALL DETAIL
NOT TO SCALE

STORM ELEVATIONS

WET POND

1.5" PROPOSED DEPTH = 38.20'

DESIGN STORM

2-YEAR = 37.16'

10-YEAR = 37.90'

25-YEAR = 38.29'

100-YEAR = 38.76'

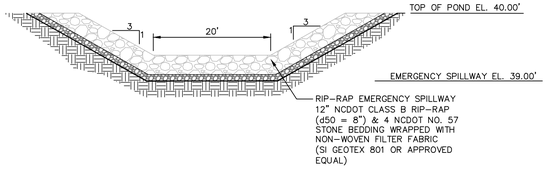

EMERGENCY SPILLWAY SECTION
NOT TO SCALE

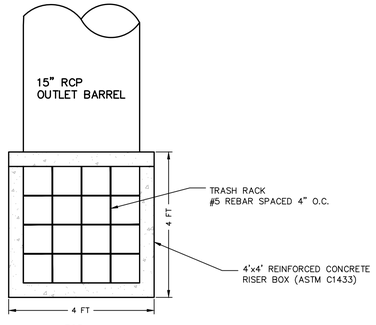

TOP

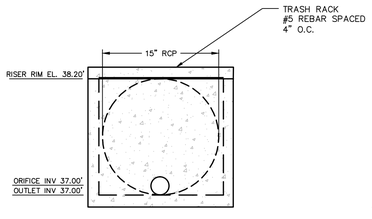

FRONT

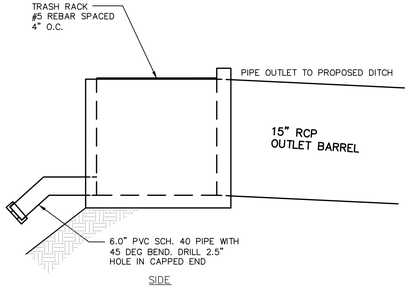

SIDE

POND OVERFLOW STRUCTURE
NOT TO SCALE

REV.NO.	DESCRIPTIONS	DATE
C	ISSUED FOR PERMITTING	01/21/15
B	PRELIMINARY PLAT PENDER CO. REVIEW	10/10/14
A	75% CONSTRUCTION DOCUMENTS TO TLC FOR REVIEW	08/15/14

REVISIONS

SEAL
PRELIMINARY - DO NOT USE FOR CONSTRUCTION

SEAL
NORTH CAROLINA PROFESSIONAL SEAL 038577 ENGINEER RICHARD A. MCKIM
01-21-15

McKIM&CREED
243 North Front Street
Wilmington, North Carolina 28401
Phone: (910)343-1048, Fax: (910)251-8282

NC LIC. No. F-1222
www.mckimcreed.com

Trask Land CO INC
1202 Eastwood Road
Wilmington, NC 28403
(910) 799-8755

BLAKE FARM – EST. 1946 –

BLAKE FARM
TOPSAIL TOWNSHIP
PENDER COUNTY NORTH CAROLINA

WET DETENTION POND #1 DETAILS

DATE:	9 JANUARY 2015
MCE PROJ. #	6525-0001
DRAWN	CDN
DESIGNED	RAC
CHECKED	RAM
PROJ. MGR.	RAM

SCALE
HORIZONTAL: N/A
VERTICAL: N/A

M&C FILE NUMBER: CN502
DRAWING NUMBER: 58

STATUS: FINAL PLAN
NOT FOR CONSTRUCTION
REVISION: C

S:\6525\0001\80-Drawings\CN502_065250001.dwg, 1/27/2015 8:20:33 PM, cnursey

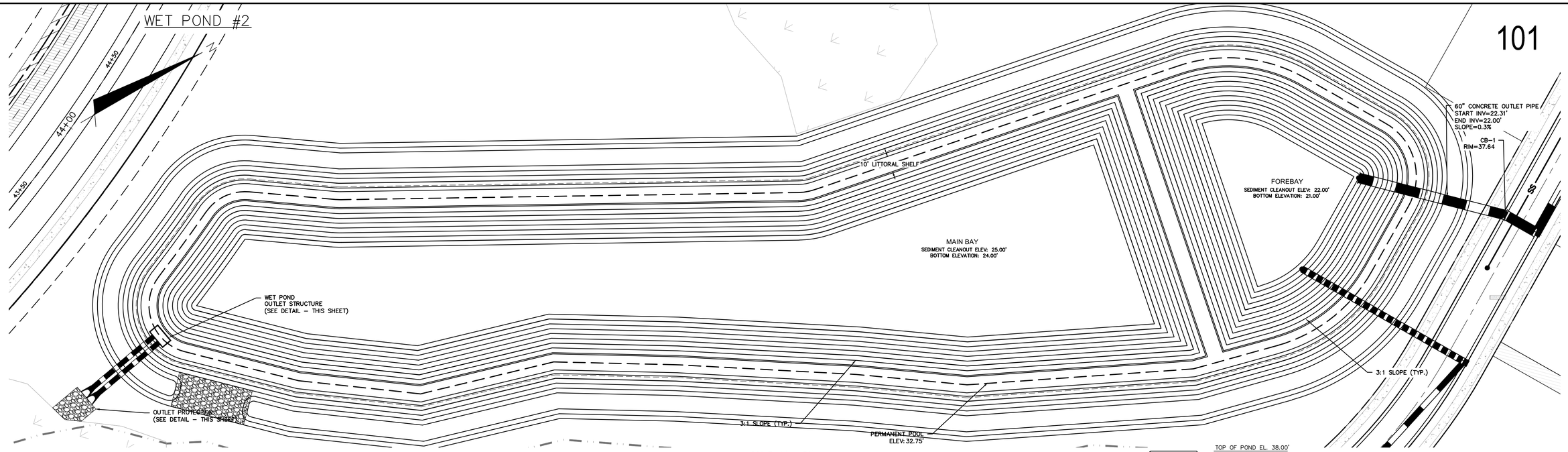

SCALE: 1" = 30'

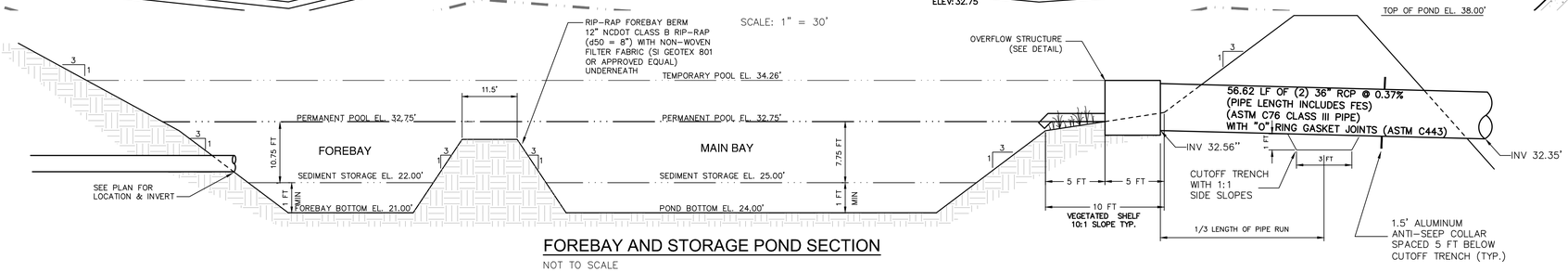

FOREBAY AND STORAGE POND SECTION

NOT TO SCALE

WET DETENTION POND NOTES

1) TEMPORARY PUMP WILL BE PROVIDED BY OWNER TO DRAIN POND/FOREBAY FOR ROUTINE MAINTENANCE OR IN AN EMERGENCY.

2) CONTRACTOR SHALL INSTALL EQUAL NUMBERS OF THE LISTED SUITABLE SPECIES FOR THE VEGETATED SHELF. GROUP SIMILAR SPECIES OF PLANTS TOGETHER, INSTALL PLANTS 24" O.C. IN A CHECKERBOARD PATTERN, AND NO PLANTS SHALL BE PLANTED WITHIN 10 FT OF THE OUTLET STRUCTURE. LISTED SUITABLE SPECIES FOR VEGETATED SHELF ARE: ARROW ARUM, BLUE FLAG IRIS, CANA LILY, AND PICKEREL WEED.

3) SOD SLOPES ABOVE THE PERMANENT POOL AROUND THE INSIDE OF THE FOREBAY, ABOVE THE VEGETATED SHELF AROUND THE MAIN BAY AND SLOPES OUTSIDE OF THE POND.

4) CONTRACTOR SHALL EXCAVATE VEGETATED SHELF AS NECESSARY TO PROVIDE ADEQUATE CLEARANCE AROUND RISER FOR PVC PIPE INVERT.

5) THE SEASONAL HIGH WATER TABLE WAS FOUND TO BE ~ EL. 36.69 IN MAIN BAY 1 AND EL. 37.00 IN MAIN BAY 2 OF THE WET DETENTION POND.

STORM ELEVATIONS

WET POND

1.5" PROPOSED DEPTH = 34.26'

DESIGN STORM

2-YEAR = 34.95'

10-YEAR = 35.96'

25-YEAR = 36.58'

100-YEAR = 37.43'

OUTLET PROTECTION	
OUTLET PIPE DIA.	36"(2)
OUTLET FLOW RATE	48.52 CFS
OUTLET VELOCITY	5.53 FT/S
MATERIAL	CLASS A
LENGTH	12'
WIDTH	18'
STONE DIA.	3"
THICKNESS	9"

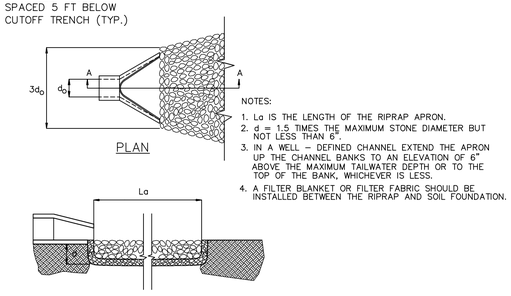

PIPE OUTLET PROTECTION

NOT TO SCALE

GENERAL NOTES

1. CONTRACTOR SHALL VERIFY LOCATIONS OF EXISTING UTILITIES.
2. BASED ON FIRM FLOOD INSURANCE RATE MAP FOR PENDER COUNTY, THIS PARCEL IS NOT LOCATED IN A FLOOD HAZARD ZONE.
3. THE IMPROVEMENTS SHOWN ON THIS SITE PLAN CANNOT DEVIATE FROM THE PLAN ONCE APPROVED WITHOUT WRITTEN APPROVAL OF ENGINEER.
4. SITE WILL REQUIRE A STATE EROSION CONTROL PERMIT AND STATE STORMWATER PERMIT.
5. IMPERVIOUS AREA SHALL DRAIN TO PROPOSED STATE PERMITTED STORMWATER POND.
6. SURVEY INFORMATION PROVIDED BY MCKIM & CREED – 01/2013 AND 07/2013.

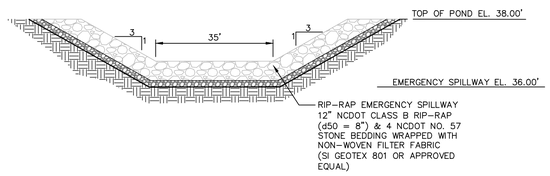

EMERGENCY SPILLWAY SECTION

NOT TO SCALE

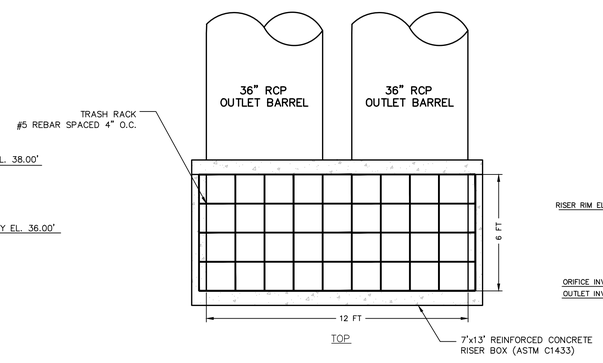

POND OVERFLOW STRUCTURE

NOT TO SCALE

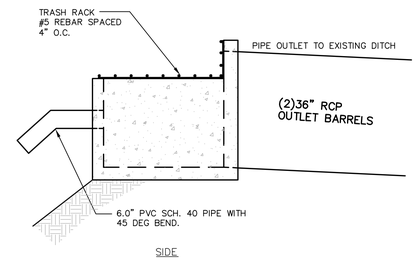

REV.NO.	DESCRIPTIONS	DATE
C	ISSUED FOR PERMITTING	01/21/15
B	PRELIMINARY PLAT PENDER CO. REVIEW	10/10/14
A	75% CONSTRUCTION DOCUMENTS TO TLC FOR REVIEW	08/11/14

REVISIONS

PRELIMINARY- DO NOT USE FOR CONSTRUCTION

SEAL 038577 ENGINEER RICHARD A. ARNESEN 01-21-15

McKIM&CREED
243 North Front Street
Wilmington, North Carolina 28401
Phone: (910)343-1048, Fax: (910)251-8282
NC LIC. No. F-1222
www.mckimcreed.com

Trask Land CO INC
1202 Eastwood Road
Wilmington, NC 28403
(910) 799-8755

BLAKE FARM

BLAKE FARM
TOPSAIL TOWNSHIP
PENDER COUNTY NORTH CAROLINA

WET DETENTION
POND #2 DETAILS

DATE:	9 JANUARY 2015
MCE PROJ. #	6525-0001
DRAWN	CDN
DESIGNED	RAC
CHECKED	RAM
PROJ. MGR.	RAM

SCALE
HORIZONTAL: N/A
VERTICAL: N/A

M&C FILE NUMBER CN503
DRAWING NUMBER 59

STATUS: FINAL PLAN
NOT FOR CONSTRUCTION
REVISION C

S:\6525\0001\BD-Drawings\CN503_06525000I1.dwg, 1/27/2015 8:26:58 PM, cnursey

POND #3

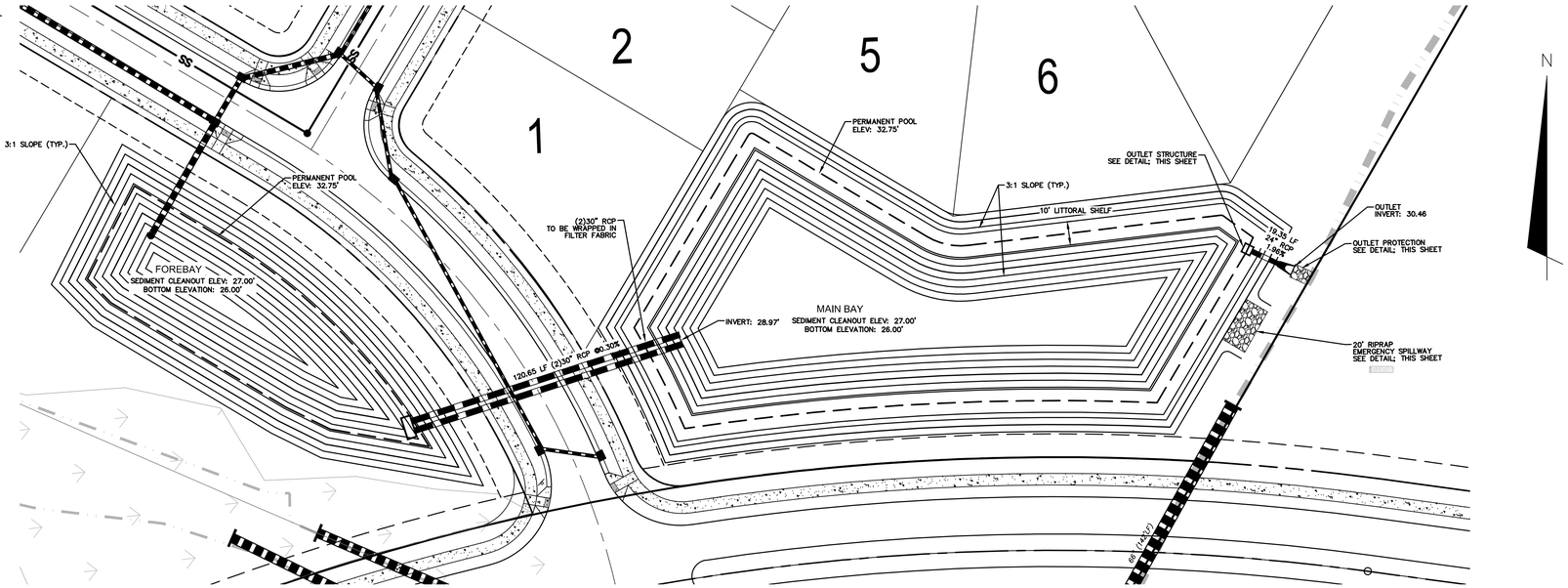

SCALE: 1" = 30'

STORM ELEVATIONS

WET POND

1.5" PROPOSED DEPTH = 33.76'

DESIGN STORM–UPPER POND–LOWER POND

2–YEAR = 34.35'/33.63'

10–YEAR = 34.55'/34.18'

25–YEAR = 35.32'/34.64'

100–YEAR = 36.49'/35.29'

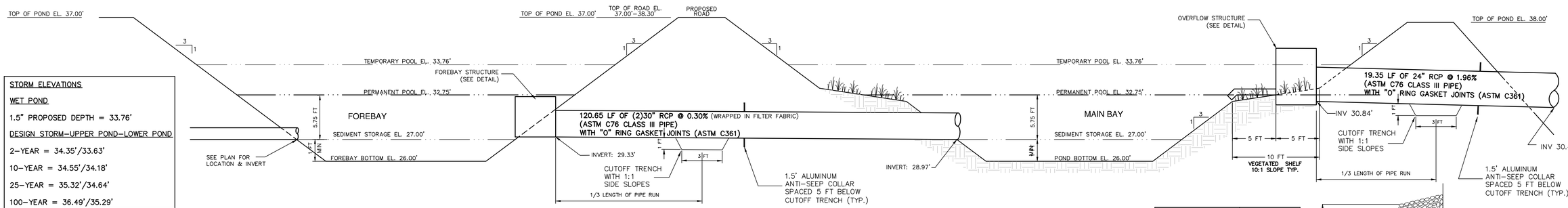

FOREBAY AND STORAGE POND SECTION

NOT TO SCALE

WET DETENTION POND NOTES

1) TEMPORARY PUMP WILL BE PROVIDED BY OWNER TO DRAIN POND/FOREBAY FOR ROUTINE MAINTENANCE OR IN AN EMERGENCY.

2) CONTRACTOR SHALL INSTALL EQUAL NUMBERS OF THE LISTED SUITABLE SPECIES FOR THE VEGETATED SHELF. GROUP SIMILAR SPECIES OF PLANTS TOGETHER, INSTALL PLANTS 24" O.C. IN A CHECKERBOARD PATTERN, AND NO PLANTS SHALL BE PLANTED WITHIN 10 FT OF THE OUTLET STRUCTURE. LISTED SUITABLE SPECIES FOR VEGETATED SHELF ARE: **ARROW ARUM, BLUE FLAG IRIS, CANA LILY, AND PICKEREL WEED.**

3) SOD SLOPES ABOVE THE PERMANENT POOL AROUND THE INSIDE OF THE FOREBAY, ABOVE THE VEGETATED SHELF AROUND THE MAIN BAY AND SLOPES OUTSIDE OF THE POND.

4) CONTRACTOR SHALL EXCAVATE VEGETATED SHELF AS NECESSARY TO PROVIDE ADEQUATE CLEARANCE AROUND RISER FOR PVC PIPE INVERT.

5) THE SEASONAL HIGH WATER TABLE WAS FOUND TO BE AT EXISTING GRADE IN THE MAIN BAY AREA OF THE WET DETENTION POND.

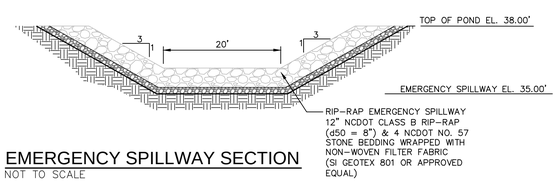

EMERGENCY SPILLWAY SECTION

NOT TO SCALE

OUTLET PROTECTION	OUTLET
OUTLET PIPE DIA.	24"
OUTLET FLOW RATE	12.70 CFS
OUTLET VELOCITY	4.49 FT/S
MATERIAL	CLASS A
LENGTH	8.0'
WIDTH	6.0'
STONE DIA.	3"
THICKNESS	9"

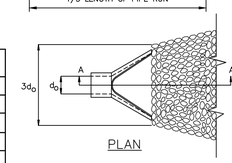

NOTES:

1. La IS THE LENGTH OF THE RIPRAP APRON.
2. d = 1.5 TIMES THE MAXIMUM STONE DIAMETER BUT NOT LESS THAN 6".
3. IN A WELL – DEFINED CHANNEL EXTEND THE APRON UP THE CHANNEL BANKS TO AN ELEVATION OF 6" ABOVE THE MAXIMUM TAILWATER DEPTH OR TO THE TOP OF THE BANK, WHICHEVER IS LESS.
4. A FILTER BLANKET OR FILTER FABRIC SHOULD BE INSTALLED BETWEEN THE RIPRAP AND SOIL FOUNDATION.

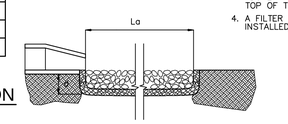

PIPE OUTLET PROTECTION

NOT TO SCALE

GENERAL NOTES

1. CONTRACTOR SHALL VERIFY LOCATIONS OF EXISTING UTILITIES.
2. BASED ON FIRM FLOOD INSURANCE RATE MAP FOR PENDER COUNTY, THIS PARCEL IS NOT LOCATED IN A FLOOD HAZARD ZONE.
3. THE IMPROVEMENTS SHOWN ON THIS SITE PLAN CANNOT DEVIATE FROM THE PLAN ONCE APPROVED WITHOUT WRITTEN APPROVAL OF ENGINEER.
4. SITE WILL REQUIRE A STATE EROSION CONTROL PERMIT AND STATE STORMWATER PERMIT.
5. IMPERVIOUS AREA SHALL DRAIN TO PROPOSED STATE PERMITTED STORMWATER POND.
6. SURVEY INFORMATION PROVIDED BY MCKIM & CREED

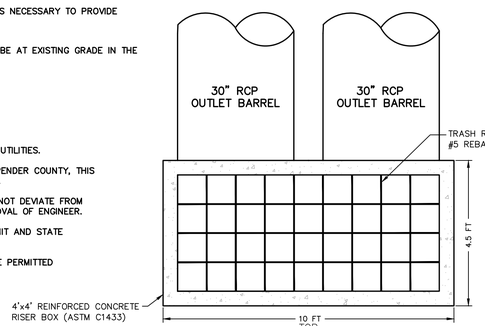

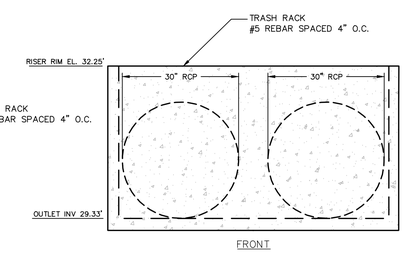

POND OVERFLOW STRUCTURE

NOT TO SCALE

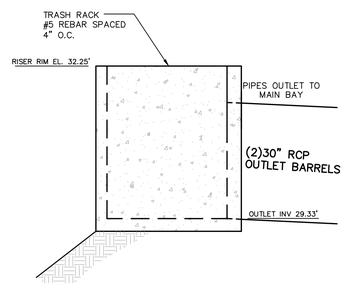

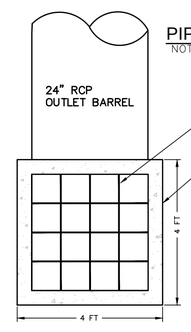

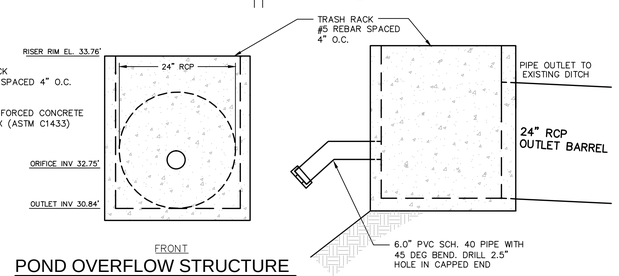

POND OVERFLOW STRUCTURE

NOT TO SCALE

REV.NO.	DESCRIPTIONS	DATE
C	ISSUED FOR PERMITTING	01/21/15
B	PRELIMINARY PLAT PENDER CO. REVIEW	10/10/14
A	75% CONSTRUCTION DOCUMENTS TO TLC FOR REVIEW	08/11/14

REVISIONS

PRELIMINARY - DO NOT USE FOR CONSTRUCTION

SEAL

NORTH CAROLINA PROFESSIONAL SEAL 038577 ENGINEER RICHARD A. GREEN

01-21-15

McKIM&CREED
243 North Front Street
Wilmington, North Carolina 28401
Phone: (910)343-1048, Fax: (910)251-8282

NC LIC. No. F-1222
www.mckimcreed.com

Trask Land CO INC
1202 Eastwood Road
Wilmington, NC 28403
(910) 799-8755

BLAKE FARM – EST. 1546 –

BLAKE FARM

TOPSAIL TOWNSHIP
PENDER COUNTY NORTH CAROLINA

WET DETENTION POND #3 DETAILS

DATE:	9 JANUARY 2015
MCE PROJ. #	6525-0001
DRAWN	CDN
DESIGNED	RAC
CHECKED	RAM
PROJ. MGR.	RAM

SCALE: HORIZONTAL: XX VERTICAL: N/A

M&C FILE NUMBER: CN504

DRAWING NUMBER: 60

STATUS: FINAL PLAN NOT FOR CONSTRUCTION

REVISION: C

S:\6525\0001\80-Drawings\CN504_065350001.dwg, 1/29/2015 12:14:17 PM, cruesky

STATE OF NORTH CAROLINA
DEPT. OF TRANSPORTATION
DIVISION OF HIGHWAYS
RALEIGH, N.C.

1-12

ENGLISH STANDARD DRAWING FOR
PAVEMENT MARKINGS
LINE TYPES AND OFFSETS

CONTINUOUS LINES

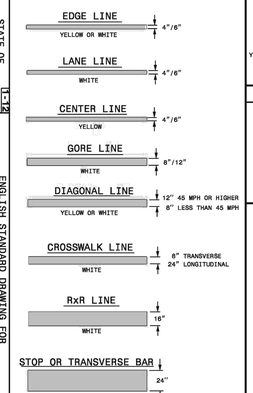

10'-30'/SP SKIP LINE

UNLESS OTHERWISED SHOWN, USE 10'-30'/SP SKIPS FOR SKIP LANE LINES AND SKIP CENTER LINES.

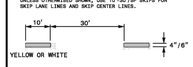

2'-6'/SP MINI-SKIP LINE

UNLESS OTHERWISED SHOWN, USE 2'-6'/SP MINI-SKIPS FOR LANE LINE EXTENSIONS THROUGH INTERSECTIONS. EDGE LINE EXTENSIONS THROUGH INTERSECTIONS AND MINI-SKIPS USED FOR BICYCLE LANE LINES.

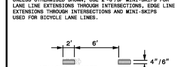

3'-3'/SP MINI-SKIP LINE

UNLESS OTHERWISED SHOWN, USE 3'-3'/SP MINI-SKIPS FOR THE WHITE EDGE LINE EXTENSIONS AT ROUNDABOUTS.

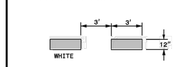

3'-9'/SP MINI-SKIP LINE

UNLESS OTHERWISED SHOWN, USE 3'-9'/SP MINI-SKIPS FOR MINI-SKIP LANE LINES AND LINE EXTENSIONS THROUGH TAPERS.

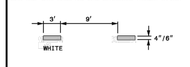

GENERAL NOTES:

1- USE 6" LANE, EDGE, AND CENTER LINES ON ALL FULL CONTROL OF ACCESS FACILITIES AND OTHER ROUTES AS DIRECTED BY THE ENGINEER.

2- LANE LINES INDICATED AS "WIDE" ON THE ROADWAY STANDARD DRAWINGS SHALL BE AT LEAST TWICE THE WIDTH OF THE NORMAL LINE.

3- GORE LINES SHALL BE TWICE THE WIDTH OF THE NORMAL LINE.

SHEET 1 OF 2
1205.01

STATE OF NORTH CAROLINA
DEPT. OF TRANSPORTATION
DIVISION OF HIGHWAYS
RALEIGH, N.C.

1-12

ENGLISH STANDARD DRAWING FOR
PAVEMENT MARKINGS
LINE TYPES AND OFFSETS

EDGE LINE OFFSET DETAIL

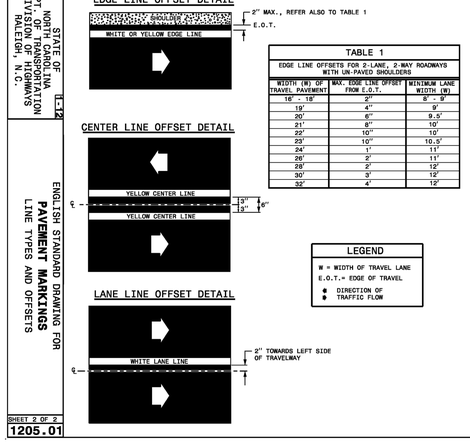

TABLE 1

EDGE LINE OFFSETS FOR 2-LANE, 2-WAY ROADWAYS WITH UN-PAVED SHOULDERS

WIDTH (W) OF TRAVEL PAVEMENT	MAX. EDGE LINE OFFSET FROM E.O.T.	MINIMUM LANE WIDTH (W)
16' - 18'	2"	9' - 9'
19'	4"	9'
20'	6"	9.5'
21'	8"	10'
22'	10"	10'
23'	10"	10.5'
24'	1'	11'
26'	2'	11'
28'	2'	12'
30'	3'	12'
32'	4'	12'

LEGEND

W = WIDTH OF TRAVEL LANE
E.O.T.= EDGE OF TRAVEL
DIRECTION OF TRAFFIC FLOW

TWO-WAY UNDIVIDED ROADWAY

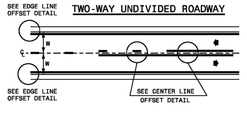

TWO-WAY UNDIVIDED ROADWAY WITH TWO-WAY LEFT TURN LANE

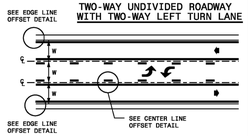

MULTI-LANE ROADWAY

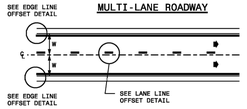

SHEET 2 OF 2
1205.01

STATE OF NORTH CAROLINA
DEPT. OF TRANSPORTATION
DIVISION OF HIGHWAYS
RALEIGH, N.C.

1-12

ENGLISH STANDARD DRAWING FOR
PAVEMENT MARKINGS
INTERSECTIONS

TWO-LANE, TWO-WAY ROADWAY

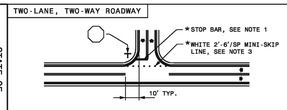

TWO-LANE, TWO-WAY ROADWAY WITH TWO-WAY LEFT TURN LANE

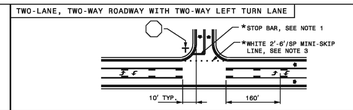

UNDIVIDED MULTI-LANE ROADWAY

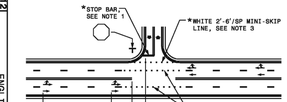

DIVIDED MULTI-LANE ROADWAY WITH TURN BAY

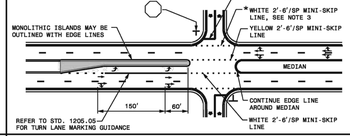

DIVIDED MULTI-LANE ROADWAY WITH WIDE MEDIAN CROSSOVER

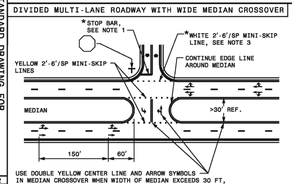

GENERAL NOTES:

1- PLACEMENT OF STOP BARS AT NON-SIGNALIZED INTERSECTIONS IS OPTIONAL AND USED WHERE IT IS IMPORTANT TO INDICATE THE POINT WHICH VEHICLES ARE REQUIRED TO STOP. PLACE STOP BARS NO LESS THAN 4 FEET AND NO MORE THAN 30 FEET FROM THE NEAREST EDGE OF THE INTERSECTING ROADWAY. USE 10 FEET AS THE TYPICAL SETBACK DISTANCE OR AS DIRECTED BY THE ENGINEER.

2- MINI-SKIP LANE LINE EXTENSIONS SHOULD BE USED AT INTERSECTIONS THAT HAVE REDUCED VISIBILITY CONDITIONS SUCH AS OFFSET, SKEWED, OR CURVED ROADWAYS.

3- MINI-SKIP EDGE LINE EXTENSIONS MAY BE PLACED THROUGH INTERSECTIONS AND MAJOR DRIVEWAYS.

4- REFER TO ROADWAY STANDARD DRAWINGS 1205.01, 1205.02, 1205.05, 1205.08 AND 1205.09 FOR ADDITIONAL PAVEMENT MARKING GUIDANCE.

LEGEND

STOP SIGN
STATIONARY SIGN
DIRECTION OF TRAFFIC FLOW
PAVEMENT MARKING SYMBOLS
OPTIONAL

SHEET 2 OF 2
1205.04

STATE OF NORTH CAROLINA
DEPT. OF TRANSPORTATION
DIVISION OF HIGHWAYS
RALEIGH, N.C.

1-12

ENGLISH STANDARD DRAWING FOR
PAVEMENT MARKINGS
TWO-LANE AND MULTI-LANE ROADWAYS

TWO-LANE, TWO-WAY ROADWAY

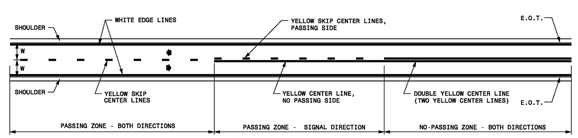

PASSING/NO PASSING ZONES WILL BE DETERMINED BY THE ENGINEER.

TWO-LANE, TWO-WAY ROADWAY WITH TWO-WAY LEFT TURN LANE

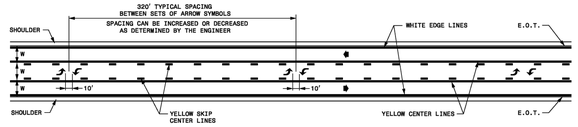

GENERAL NOTES:

1- EDGE LINES ARE NOT REQUIRED ALONG CURB AND GUTTER LOCATIONS.

2- CONTINUE EDGE LINES THROUGH MINOR DRIVEWAYS. DO NOT CONTINUE EDGE LINES AT INTERSECTIONS AND MAJOR DRIVEWAYS, SEE ROADWAY STANDARD DRAWING 1205.05 FOR ADDITIONAL GUIDANCE.

3- REFER TO ROADWAY STANDARD DRAWINGS 1205.01 AND 1205.08 FOR ADDITIONAL PAVEMENT MARKING GUIDANCE.

LEGEND

W = WIDTH OF TRAVEL LANE
E.O.T.= EDGE OF TRAVEL
DIRECTION OF TRAFFIC FLOW
PAVEMENT MARKING SYMBOLS

SHEET 1 OF 2
1205.02

STATE OF NORTH CAROLINA
DEPT. OF TRANSPORTATION
DIVISION OF HIGHWAYS
RALEIGH, N.C.

1-12

ENGLISH STANDARD DRAWING FOR
PAVEMENT MARKINGS
TWO-LANE AND MULTI-LANE ROADWAYS

UNDIVIDED MULTI-LANE ROADWAY WITH TWO-WAY LEFT TURN LANE

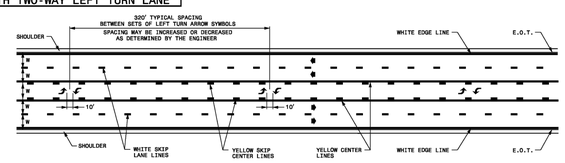

DIVIDED FOUR-LANE ROADWAY

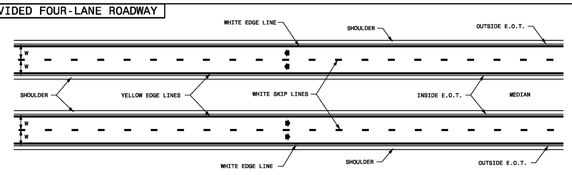

GENERAL NOTES:

1- EDGE LINES ARE NOT REQUIRED ALONG CURB AND GUTTER LOCATIONS.

2- CONTINUE EDGE LINES THROUGH MINOR DRIVEWAYS. DO NOT CONTINUE EDGE LINES AT INTERSECTIONS AND MAJOR DRIVEWAYS, SEE ROADWAY STANDARD DRAWING 1205.05 FOR ADDITIONAL GUIDANCE.

3- REFER TO ROADWAY STANDARD DRAWINGS 1205.01 AND 1205.08 FOR ADDITIONAL PAVEMENT MARKING GUIDANCE.

LEGEND

W = WIDTH OF TRAVEL LANE
E.O.T.= EDGE OF TRAVEL
DIRECTION OF TRAFFIC FLOW
PAVEMENT MARKING SYMBOLS

SHEET 2 OF 2
1205.02

STATE OF NORTH CAROLINA
DEPT. OF TRANSPORTATION
DIVISION OF HIGHWAYS
RALEIGH, N.C.

1-12

ENGLISH STANDARD DRAWING FOR
PAVEMENT MARKINGS
TURN LANES

DIRECT TAPER TURN LANE

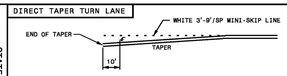

TURN LANE BAYS < 125 FT.

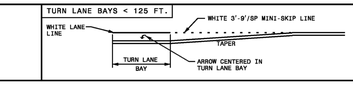

TURN LANE BAYS 125 - 250 FT.

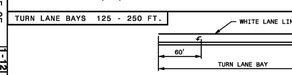

TURN LANE BAYS 250 FT. OR GREATER

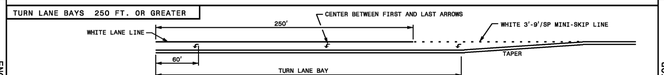

LEFT TURN LANE DEVELOPED FROM TWO-WAY TURN LANE

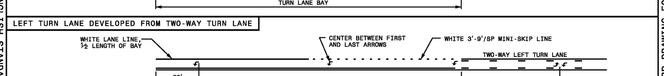

DOUBLE TURN LANES

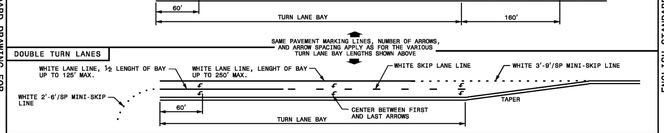

GENERAL NOTES:

1- USE THE GUIDANCE SHOWN ABOVE IN CONJUNCTION WITH THE INTERSECTION GUIDANCE SHOWN ON ROADWAY STANDARD DRAWING 1205.04.

2- THE NUMBER OF ARROWS SHOWN IS THE MINIMUM REQUIRED. USE ADDITIONAL ARROWS AS DIRECTED BY THE ENGINEER.

LEGEND

PAVEMENT MARKING SYMBOL

SHEET 1 OF 1
1205.05

STOP	30" X 30" R1-1 — ONE "U" POST PER SIGN
YIELD	36" X 36" X 36" R1-2 — ONE "U" POST PER SIGN
SPEED LIMIT 55	26" X 40" R2-1 — ONE "U" POST PER SIGN
RIGHT LANE MUST TURN RIGHT	30" X 30" R3-7R — ONE "U" POST PER SIGN
WRONG WAY	36" X 24" R5-1a — ONE "U" POST PER SIGN
KEEP RIGHT	24" X 30" R4-7 — ONE "U" POST PER SIGN
DO NOT ENTER	30" X 30" R5-1 — ONE "U" POST PER SIGN
W11-2	24" X 24" W11-2 — ONE "U" POST PER SIGN
ONE WAY	36" X 12" R6-1L — TWO "U" POSTS PER SIGN
ONE WAY	36" X 12" R6-1R — TWO "U" POSTS PER SIGN
W6-1	36" X 36" W6-1 — ONE "U" POST PER SIGN
PROVIDE 8' SPACING PRIOR TO ARROW; ONLY	"ONLY" PAVEMENT MARKING THERMOPLASTIC (90 MILS)
	36" X 36" W2-6 — ONE "U" POST PER SIGN
15 M.P.H.	18" X 18" W13-1 — ATTACH BELOW 113
	36" X 12" W1-8A — TWO "U" POST PER SIGN
ONLY	30" X 36" R3-5R

REV.NO.	DESCRIPTIONS	DATE
C	ISSUED FOR PERMITTING	01/25/15
B	PRELIMINARY PLAT PENDER CO. REVIEW	10/10/14
A	75% CONSTRUCTION DOCUMENTS TO TLC FOR REVIEW	08/11/14

REVISIONS

PRELIMINARY- DO NOT USE FOR CONSTRUCTION

SEAL

NORTH CAROLINA PROFESSIONAL SEAL 038577 ENGINEER RICHARD A. MASSEN

01-21-15

McKIM&CREED
243 North Front Street
Wilmington, North Carolina 28401
Phone: (910)343-1048, Fax: (910)251-8282

NC LIC. No. F-1222
www.mckimcreed.com

Trask Land CO INC
1202 Eastwood Road
Wilmington, NC 28403
(910) 799-8755

BLAKE FARM — EST. 1946

BLAKE FARM
TOPSAIL TOWNSHIP
PENDER COUNTY NORTH CAROLINA

PAVEMENT MARKING & TRAFFIC SIGN DETAILS

DATE:	9 JANUARY 2015
MCE PROJ. #	6525-0001
DRAWN	CDN
DESIGNED	RAC
CHECKED	RAM
PROJ. MGR.	RAM

SCALE
HORIZONTAL: N/A
VERTICAL: N/A

M&C FILE NUMBER: CP501
DRAWING NUMBER: 61

STATUS: FINAL PLAN NOT FOR CONSTRUCTION
REVISION: C

S:\6525\0001\BK-Drawings\CP501_065250001.dwg, 1/27/2015 8:34:05 PM, cnursey

CHANNELIZING ISLAND SEPARATING TRAFFIC IN SAME DIRECTION

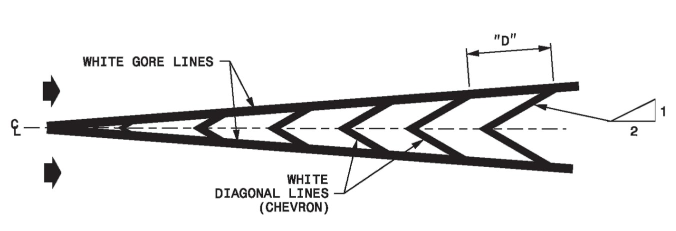

MEDIAN ISLAND SEPARATING TRAFFIC IN OPPOSING DIRECTIONS

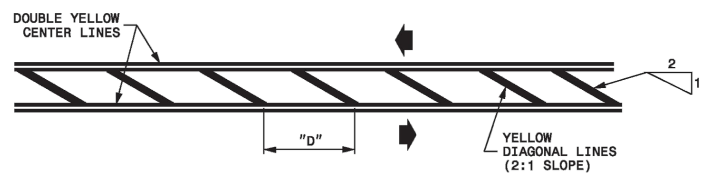

EDGE OF PAVEMENT OR SHOULDER ISLAND

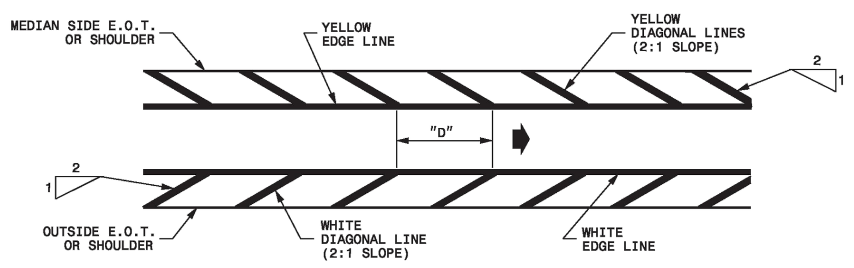

GENERAL NOTES:

1- "D" = SPACING OF DIAGONAL LINES (TYPICALLY EQUAL IN FEET TO THE POSTED SPEED LIMIT).

2- INCREASE SPACING OF DIAGONALS TO 200' OR MORE ON INTERSTATE ROADWAYS.

3- ADJUST SPACING OF DIAGONALS DEPENDING ON THE LENGTH OF THE ISLAND. SPACING MAY BE ADJUSTED AS DETERMINED BY THE ENGINEER.

LEGEND
E.O.T.= EDGE OF TRAVEL
DIRECTION OF TRAFFIC FLOW

STATE OF NORTH CAROLINA DEPT. OF TRANSPORTATION DIVISION OF HIGHWAYS RALEIGH, N.C. 1-12
ENGLISH STANDARD DRAWING FOR **PAVEMENT MARKINGS** PAINTED ISLANDS
SHEET 1 OF 1 **1205.09**

TYPICAL PAVEMENT MARKER

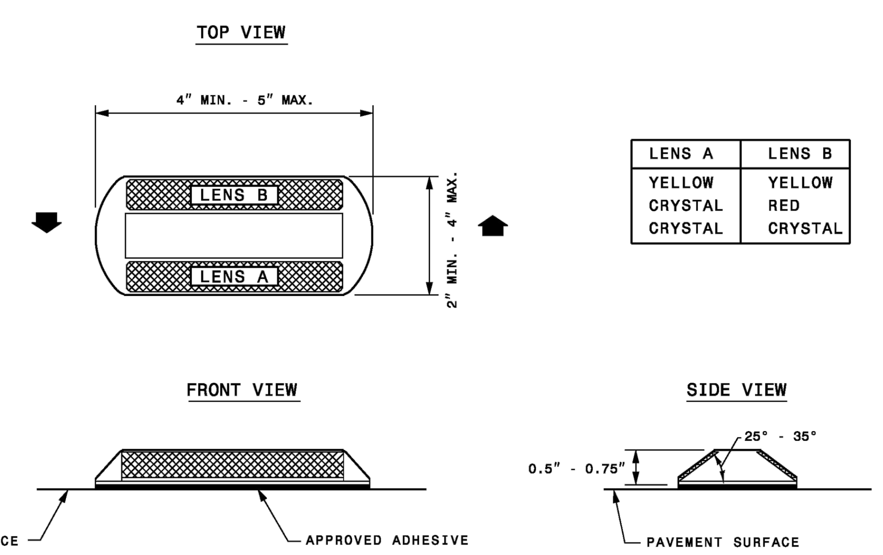

LENS A	LENS B
YELLOW	YELLOW
CRYSTAL	RED
CRYSTAL	CRYSTAL

GENERAL NOTES:

1- USE A MINIMUM OF 2 SQUARE INCHES FOR THE AREA OF EACH REFLECTIVE LENS.

2- FOR A COMPLETE LISTING OF PAVEMENT MARKERS AND ADHESIVES ACCEPTABLE FOR USE IN NORTH CAROLINA CONTACT THE NCDOT SIGNING AND DELINEATION UNIT.

LEGEND
DIRECTION OF TRAFFIC FLOW

STATE OF NORTH CAROLINA DEPT. OF TRANSPORTATION DIVISION OF HIGHWAYS RALEIGH, N.C. 1-12
ENGLISH STANDARD DRAWING FOR **RAISED PAVEMENT MARKERS** PERMANENT AND TEMPORARY
SHEET 1 OF 1 **1251.01**

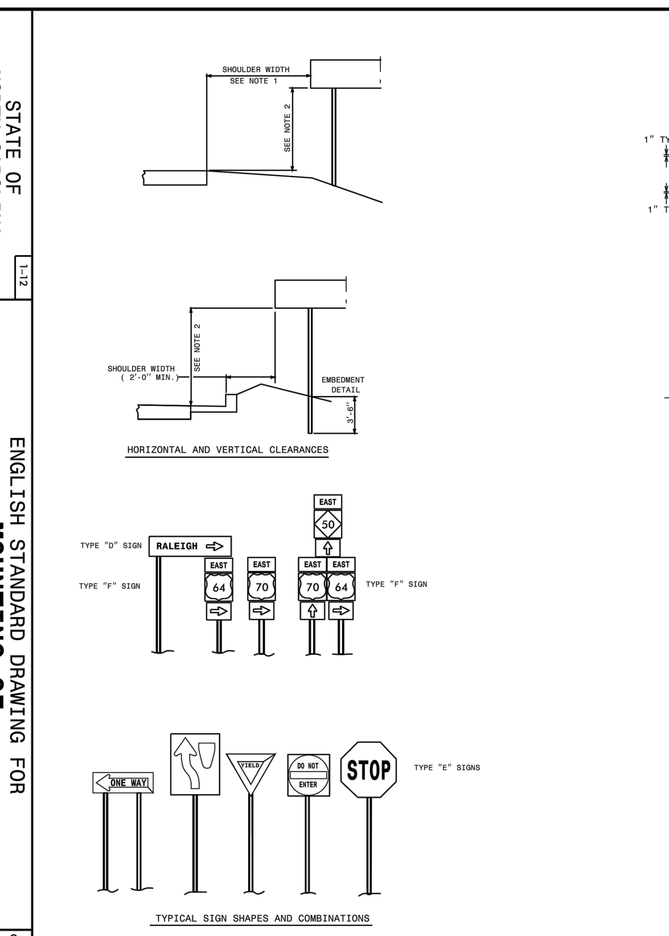

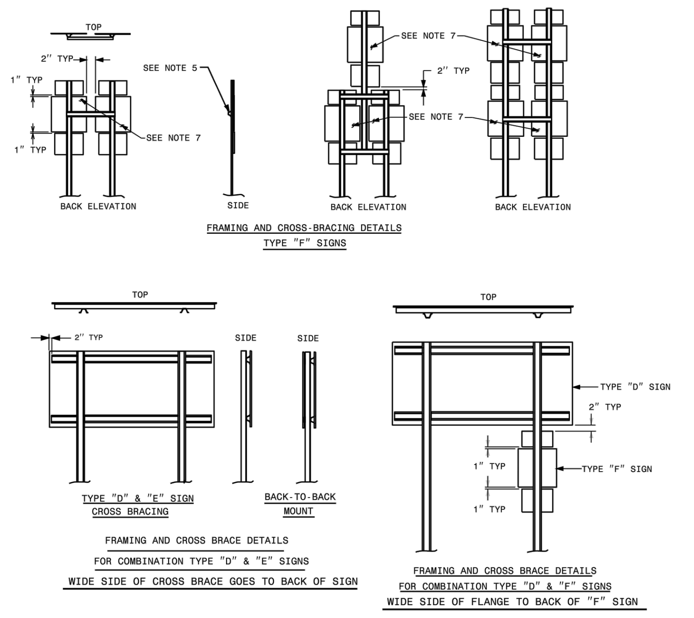

NOTES:

1. ERECT TYPE "D", "E", AND "F" SIGNS ON FREEWAYS WITH THE NEAR EDGE OF THE SIGN 20 FT. FROM THE TRAVEL LANE. ERECT ALL OTHER "D", "E", AND "F" SIGNS WITH THE NEAR EDGE OF THE SIGN AT THE EDGE OF THE SHOULDER BREAK (6 FT. MINIMUM CLEARANCE, 12 FT. DESIRABLE, FROM THE EDGE OF TRAVEL LANE), OR AS DIMENSIONED ON PLAN SHEETS.
2. ERECT TYPE "D", "E", AND "F" SIGNS WITH THE BOTTOM OF SIGN ASSEMBLY AT LEAST 7 FT. ABOVE THE EDGE OF THE TRAVEL LANE ON ROADS WITH 2 OR MORE LANES AND AT LEAST 5 FT. ON OTHER ROUTES. THE VERTICAL CLEARANCE IS 7 FT. WHERE REQUIRED FOR PEDESTRIAN TRAFFIC AND/OR PARKED VEHICLES.
3. THE VERTICAL DIMENSION BETWEEN MOUNTING HOLE CENTERS ON ALL TYPES "D", "E", AND "F" SIGNS IS 30" MAXIMUM. THE VERTICAL AND HORIZONTAL DIMENSIONS BETWEEN MOUNTING HOLES IS TO THE WHOLE INCH. EACH SIGN PANEL HAS A MINIMUM OF 2 BOLTS PER SUPPORT.
4. ATTACH SIGN W/ 5/16" HEX HEAD BOLT, NYLON WASHER, SHIM, FLAT WASHER, LOCK WASHER, HEX NUT NO BUCKLING OF THE SIGN WILL BE PERMITTED. SEE ASSEMBLY DETAIL SHEET# 2 OF 904.50.
5. FURNISH AND INSTALL CROSS-BRACING AS SHOWN IN DETAIL. PAINT ENDS OF CROSS BRACES W/ APPROVED. ZINC PAINT
6. INSTALL POST AND CROSS-BRACING WITH THE WIDE SIDE OF THE FLANGE TOWARD THE BACK OF SIGN(S) FOR COMBINATION TYPE "D" AND "F" SIGNS.
7. THE SHIELD HEIGHTS IN THESE ASSEMBLIES CAN NOT BE LARGER THAN 24".

STATE OF NORTH CAROLINA DEPT. OF TRANSPORTATION DIVISION OF HIGHWAYS RALEIGH, N.C. 1-12
ENGLISH STANDARD DRAWING FOR **MOUNTING OF TYPE 'D','E' AND 'F' SIGNS ON 'U' CHANNEL POSTS**
SHEET 1 OF 2 **904.50**

GENERAL NOTES:

1- MARKERS ARE GENERALLY NOT REQUIRED ALONG EDGE LINES EXCEPT IF DESIGNATED IN THE PLANS OR DIRECTED BY THE ENGINEER. WHEN THEY ARE REQUIRED, SPACE THEM ON 20 FT. CENTERS, AND OFFSET 2 INCHES FROM THE EDGE LINE ON THE TRAFFIC SIDE.

2- PLACE CRYSTAL/RED MARKERS AT INTERSECTIONS AND INTERCHANGES WHERE WRONG-WAY MOVEMENTS ARE POSSIBLE. POSITION THE RED SIDE OF THE MARKER TO FACE "WRONG-WAY" TRAFFIC. WHEN USED, PLACE CRYSTAL/RED MARKERS ALONG THE ENTIRE LENGTH OF THE PROJECT.

3- DO NOT PLACE PAVEMENT MARKERS CLOSER THAN 3 INCHES TO A PAVEMENT CONSTRUCTION JOINT (AS FEASIBLE), EXCEPT WHEN PLACED BETWEEN DOUBLE YELLOW CENTER LINES, AND ALONG YELLOW SKIP LINES ON TWO-LANE, TWO-WAY ROADWAYS WHERE PASSING IS ALLOWED IN BOTH DIRECTIONS.

4- DO NOT PLACE PAVEMENT MARKERS DIRECTLY ON PAVEMENT MARKING LINES.

5- PLACE PAVEMENT MARKERS USED IN CONJUNCTION WITH DOUBLE YELLOW CENTER LINES MID-WAY BETWEEN THE LINES. PROVIDE A GAP BETWEEN THE LINES AND THE MARKER TO REDUCE OVERSPRAYING THE MARKER DURING REPAINTING OPERATIONS.

6- MARKERS ARE NOT REQUIRED ALONG MINI-SKIP LINES IN TAPERS.

PAVEMENT MARKER SPACING CHART

TYPE OF PAVEMENT MARKING	TYPICAL SPACING (FT)
SKIP LINES AND CENTER LINES ALONG THRU LANES-	
ALONG TANGENT SECTIONS AND HORIZONTAL CURVES LESS THAN 6°	80
HORIZONTAL CURVES ≥ 6°	40
TURN LANES-	
MINI-SKIP LINES	24
SKIP LINES	40
SOLID LINES	20
CENTER LINES	40
MINI-SKIP LINES AT LANE DROP APPROACHES	24
TWO-WAY RAMP CENTER LINES	40
GORE LINES	20
PAINTED ISLANDS-	
WHITE	20
YELLOW	40
RAISED MEDIAN ISLANDS	40
WRONG WAY RAMP ARROW	5
TAPERS	40
NARROW BRIDGES-	
EDGE LINE	20
CENTER LINE	40
ONE LANE BRIDGES-	
EDGE LINE	20
WORK ZONE APPLICATIONS	
2-LANE, 2-WAY ON-SITE DIVERSION	20 FT. FOR CENTER LINE
ALL OTHER DIVERSIONS	½ NORMAL SPACING

STATE OF NORTH CAROLINA DEPT. OF TRANSPORTATION DIVISION OF HIGHWAYS RALEIGH, N.C. 1-12
ENGLISH STANDARD DRAWING FOR **RAISED PAVEMENT MARKERS** INSTALLATION SPACING
SHEET 1 OF 3 **1250.01**

STRAIGHT ARROW / RIGHT OR LEFT TURN ARROW / COMBINATION STRAIGHT AND LEFT OR RIGHT TURN ARROW

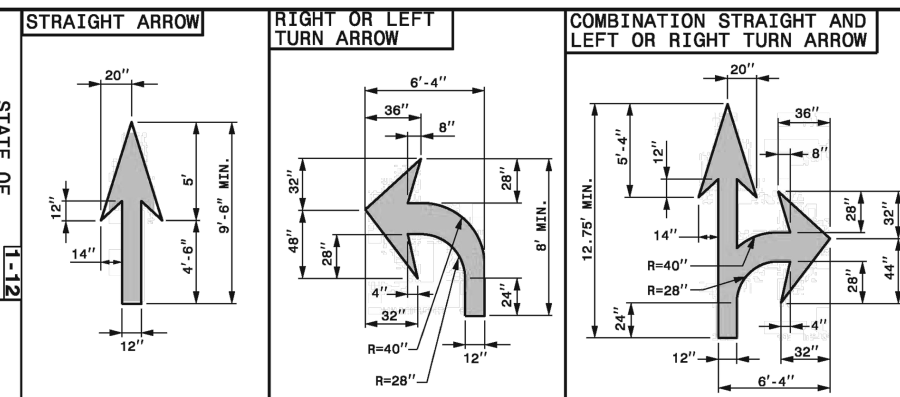

COMBINATION LEFT AND RIGHT TURN ARROW

SAME DIMENSIONS APPLY AS FOR THE LEFT/RIGHT TURN ARROW

COMBINATION LEFT AND STRAIGHT AND RIGHT TURN ARROW

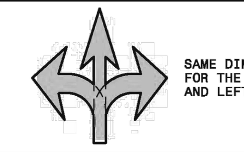

SAME DIMENSIONS APPLY AS FOR THE COMBINATION STRAIGHT AND LEFT/RIGHT TURN ARROW

MERGE ARROW

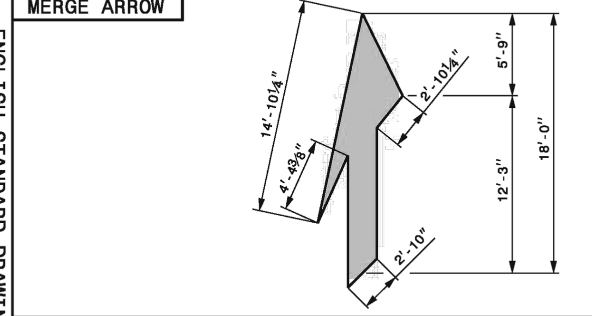

RAMP ARROW

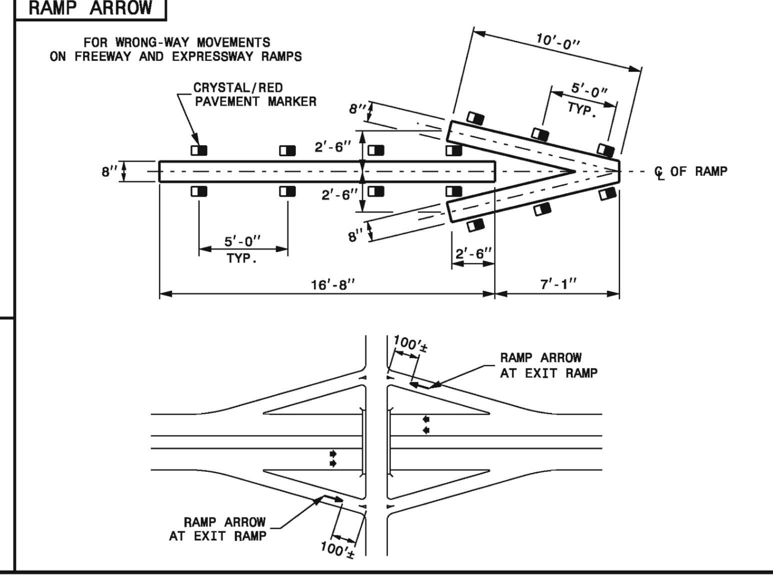

GENERAL NOTES:

1- USE THE COLOR WHITE FOR ALL PAVEMENT MARKING SYMBOLS.

2- DO NOT LOCATE PAVEMENT MARKING SYMBOLS AS TO ENCROACH INTO INTERSECTION AREAS.

3- DO NOT PLACE PAVEMENT MARKING SYMBOLS ACROSS TRANSVERSE EXPANSION JOINTS ON PORTLAND CEMENT CONCRETE PAVEMENTS, UNLESS APPROVED BY THE ENGINEER.

4- CONFORM ALL SYMBOLS TO THE FHWA "STANDARD ALPHABETS FOR HIGHWAY SIGNS AND PAVEMENT MARKINGS", (REFER TO SHEETS 5 THRU 8). SYMBOL DIMENSIONS CAN VARY AMONG MANUFACTURERS, THEREFORE SLIGHT VARIANCES ARE ACCEPTABLE, HOWEVER, ALL SYMBOLS ARE REQUIRED TO BE APPROVED BY THE DEPARTMENT.

STATE OF NORTH CAROLINA DEPT. OF TRANSPORTATION DIVISION OF HIGHWAYS RALEIGH, N.C. 1-12
ENGLISH STANDARD DRAWING FOR **PAVEMENT MARKINGS** SYMBOLS AND WORD MESSAGES
SHEET 1 OF 8 **1205.08**

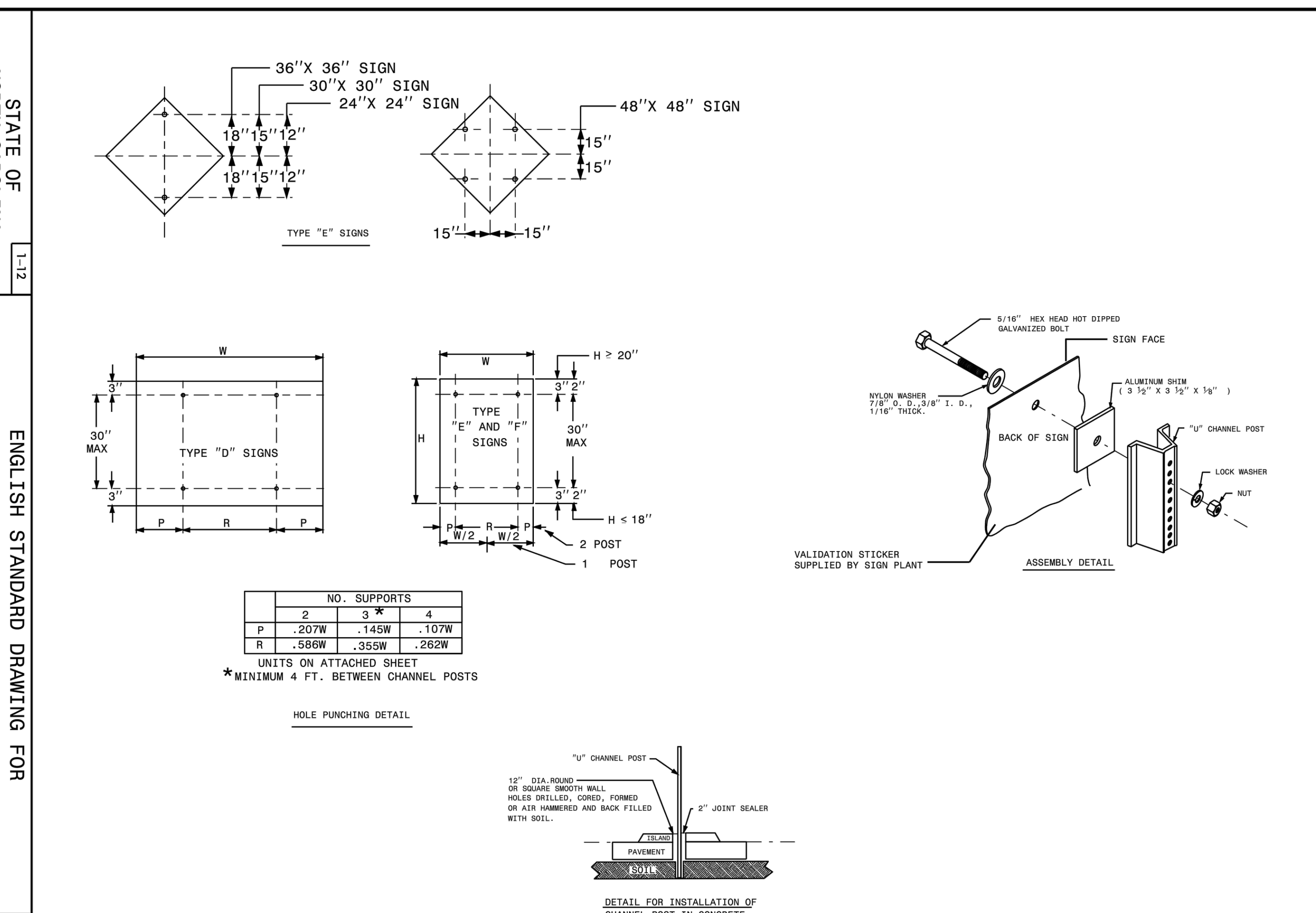

	NO. SUPPORTS		
	2	3*	4
P	.207W	.145W	.107W
R	.586W	.355W	.262W

STATE OF NORTH CAROLINA DEPT. OF TRANSPORTATION DIVISION OF HIGHWAYS RALEIGH, N.C. 1-12
ENGLISH STANDARD DRAWING FOR **MOUNTING OF TYPE 'D','E' AND 'F' SIGNS ON 'U' CHANNEL POSTS**
SHEET 2 OF 2 **904.50**

AUXILIARY TURN LANES

YELLOW PAINTED ISLANDS

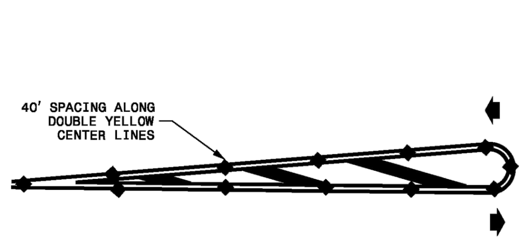

WHITE PAINTED ISLANDS

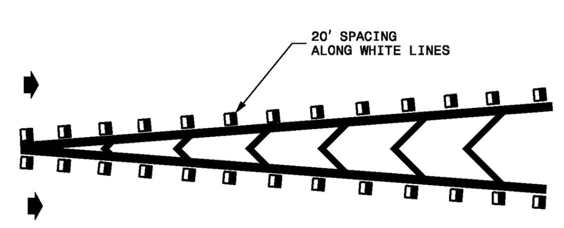

LEGEND
DIRECTION OF TRAFFIC FLOW
CRYSTAL/RED PAVEMENT MARKER
YELLOW/YELLOW PAVEMENT MARKER
PAVEMENT MARKING SYMBOL

STATE OF NORTH CAROLINA DEPT. OF TRANSPORTATION DIVISION OF HIGHWAYS RALEIGH, N.C. 1-12
ENGLISH STANDARD DRAWING FOR **RAISED PAVEMENT MARKERS** INSTALLATION SPACING
SHEET 3 OF 3 **1250.01**

U-TURN ARROW LEFT

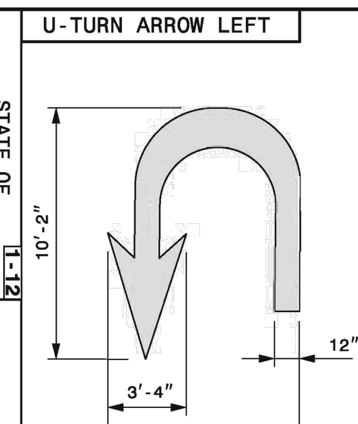

BICYCLE DETECTOR SYMBOL

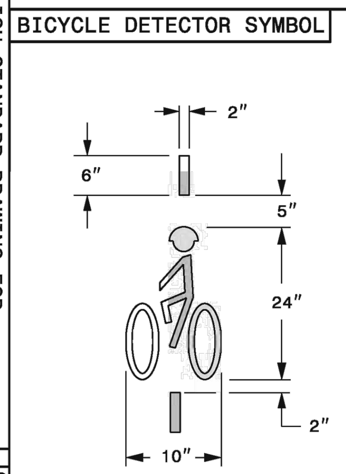

12" YIELD LINE SYMBOL

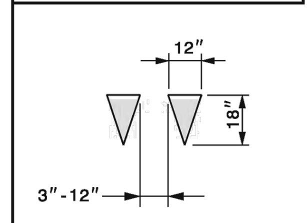

USE ON UNDER 12' LANES

24" YIELD LINE SYMBOL

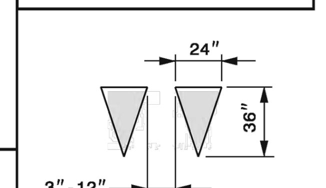

USE ON 12' AND ABOVE LANES

SHARED LANE SYMBOL

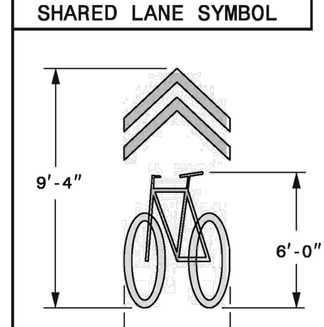

BICYCLE LANE SYMBOLS

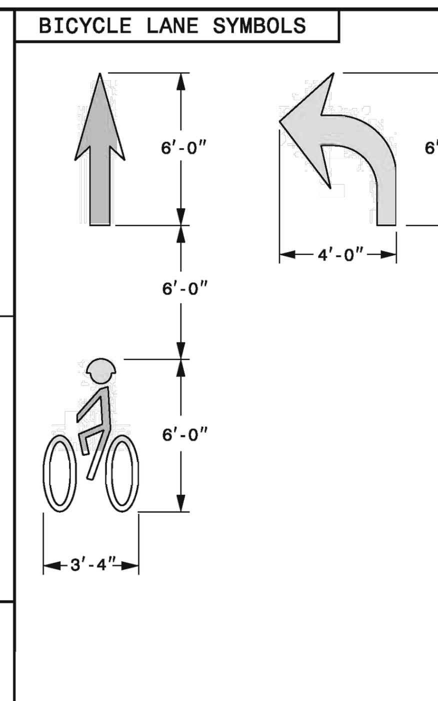

GENERAL NOTES:

1- USE THE COLOR WHITE FOR ALL PAVEMENT MARKING SYMBOLS.

2- DO NOT LOCATE PAVEMENT MARKING SYMBOLS AS TO ENCROACH INTO INTERSECTION AREAS.

3- DO NOT PLACE PAVEMENT MARKING SYMBOLS ACROSS TRANSVERSE EXPANSION JOINTS ON PORTLAND CEMENT CONCRETE PAVEMENTS, UNLESS APPROVED BY THE ENGINEER.

4- CONFORM ALL SYMBOLS TO THE FHWA "STANDARD ALPHABETS FOR HIGHWAY SIGNS AND PAVEMENT MARKINGS", (REFER TO SHEETS 5 THRU 8). SYMBOL DIMENSIONS CAN VARY AMONG MANUFACTURERS, THEREFORE SLIGHT VARIANCES ARE ACCEPTABLE, HOWEVER, ALL SYMBOLS ARE REQUIRED TO BE APPROVED BY THE DEPARTMENT.

STATE OF NORTH CAROLINA DEPT. OF TRANSPORTATION DIVISION OF HIGHWAYS RALEIGH, N.C. 1-12
ENGLISH STANDARD DRAWING FOR **PAVEMENT MARKINGS** SYMBOLS AND WORD MESSAGES
SHEET 2 OF 8 **1205.08**

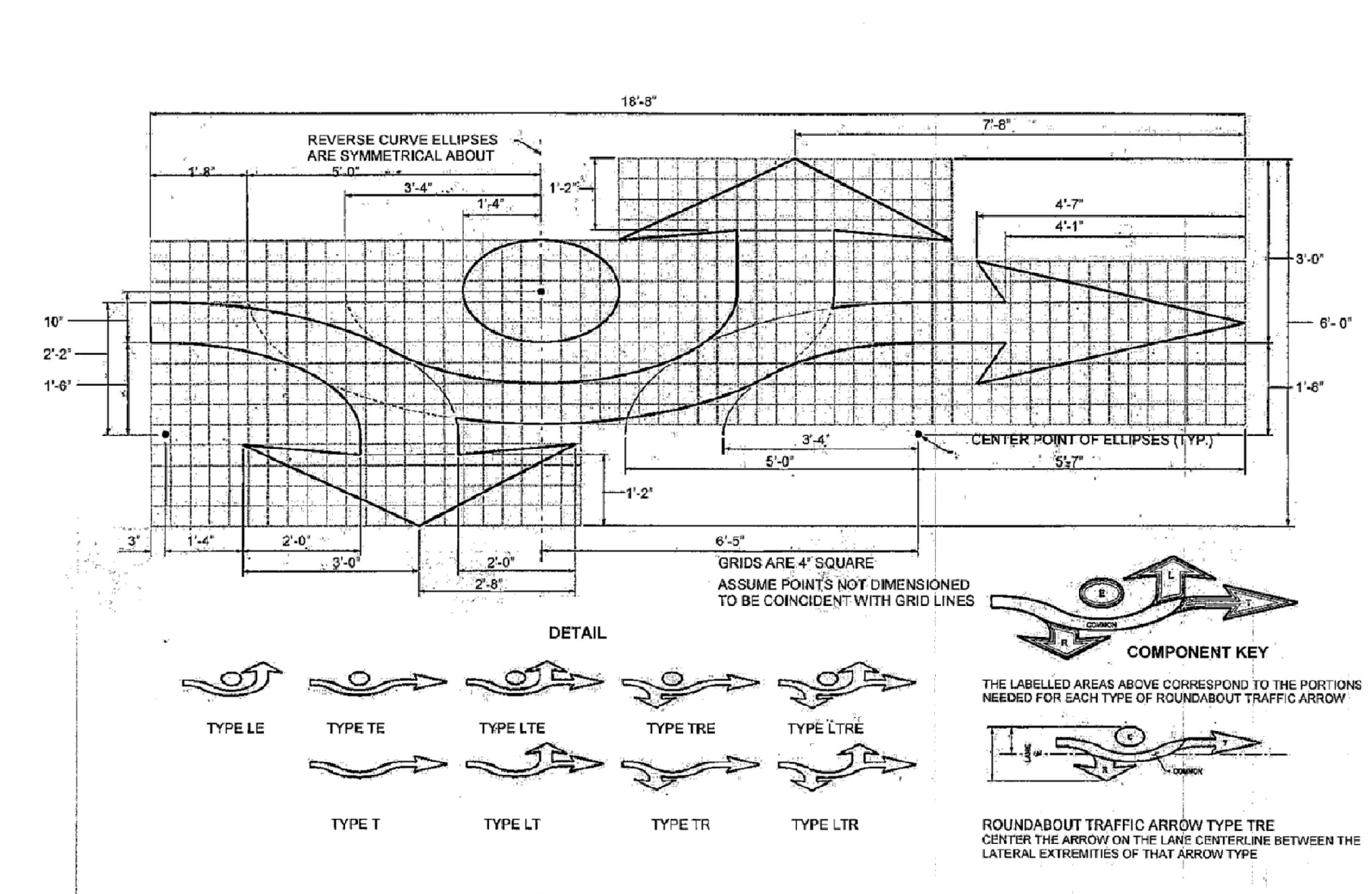

REV.NO.	DESCRIPTIONS	DATE
C	ISSUED FOR PERMITTING	01/21/15
B	PRELIMINARY PLAT PENDER CO. REVIEW	10/10/14
A	75% CONSTRUCTION DOCUMENTS TO TLC FOR REVIEW	08/11/14

REVISIONS

SEAL
PRELIMINARY- DO NOT USE FOR CONSTRUCTION

SEAL
NORTH CAROLINA PROFESSIONAL SEAL 038577 ENGINEER RICHARD A. CHRISTENSEN 01-21-15

McKIM&CREED
243 North Front Street
Wilmington, North Carolina 28401
Phone: (910)343-1048, Fax: (910)251-8282
NC LIC. No. F-1222
www.mckimcreed.com

Trask Land CO INC
1202 Eastwood Road
Wilmington, NC 28403
(910) 799-8755

BLAKE FARM EST 1946

BLAKE FARM

TOPSAIL TOWNSHIP
PENDER COUNTY NORTH CAROLINA

PAVEMENT MARKING & TRAFFIC SIGN DETAILS

DATE:	9 JANUARY 2015
MCE PROJ. #	6525-0001
DRAWN	CDN
DESIGNED	RAC
CHECKED	RAM
PROJ. MGR.	RAM

SCALE
HORIZONTAL: N/A
VERTICAL: N/A

M&C FILE NUMBER CP502
DRAWING NUMBER 62

STATUS: FINAL PLAN NOT FOR CONSTRUCTION
REVISION C

S:\6525\0001\80-Drawings\CP502_065250001.dwg, 1/27/2015 8:34:30 PM, cnursey

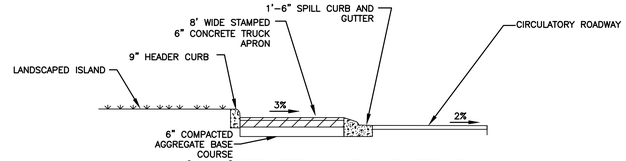

(A-A) TRAFFIC CIRCLE SECTION

NOT TO SCALE

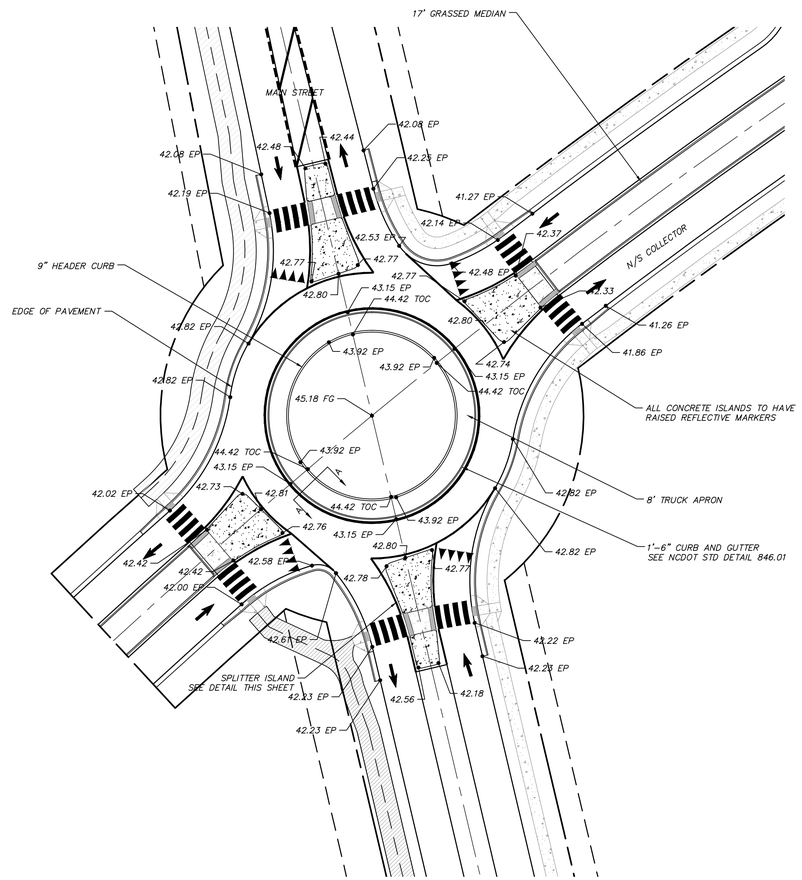

MAIN STREET AND N/S COLLECTOR CONNECTION ROUNDABOUT PLAN

NOT TO SCALE

STATE OF NORTH CAROLINA DEPT. OF TRANSPORTATION DIVISION OF HIGHWAYS RALEIGH, N.C.

1-12

ENGLISH STANDARD DRAWING FOR **MEDIAN CURB FOR CATCH BASIN** (FOR USE WITH 1'-6" CURB AND GUTTER)

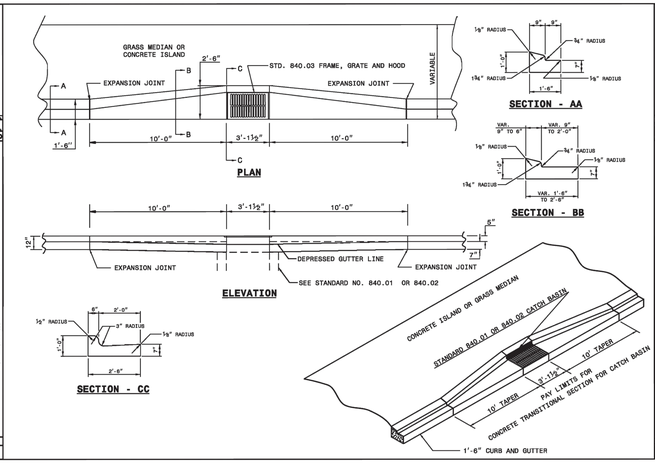

SHEET 1 OF 1

852.05

STATE OF NORTH CAROLINA DEPT. OF TRANSPORTATION DIVISION OF HIGHWAYS RALEIGH, N.C.

1-12

ENGLISH STANDARD DRAWING FOR **CONCRETE ISLANDS**

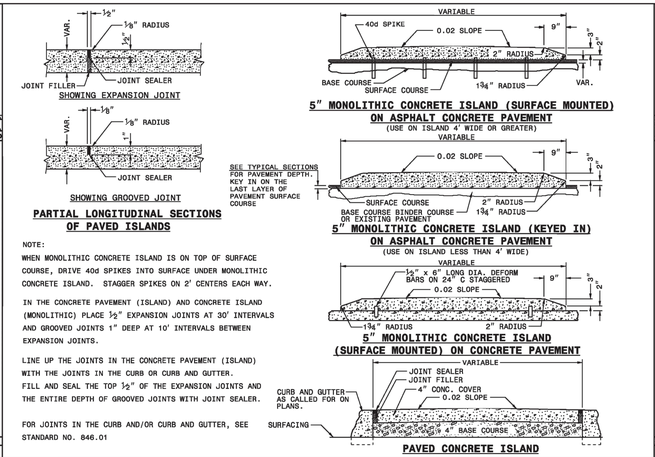

NOTE:

WHEN MONOLITHIC CONCRETE ISLAND IS ON TOP OF SURFACE COURSE, DRIVE 40d SPIKES INTO SURFACE UNDER MONOLITHIC CONCRETE ISLAND. STAGGER SPIKES ON 2' CENTERS EACH WAY.

IN THE CONCRETE PAVEMENT (ISLAND) AND CONCRETE ISLAND (MONOLITHIC) PLACE ½" EXPANSION JOINTS AT 30' INTERVALS AND GROOVED JOINTS 1" DEEP AT 10' INTERVALS BETWEEN EXPANSION JOINTS.

LINE UP THE JOINTS IN THE CONCRETE PAVEMENT (ISLAND) WITH THE JOINTS IN THE CURB OR CURB AND GUTTER. FILL AND SEAL THE TOP ½" OF THE EXPANSION JOINTS AND THE ENTIRE DEPTH OF GROOVED JOINTS WITH JOINT SEALER.

FOR JOINTS IN THE CURB AND/OR CURB AND GUTTER, SEE STANDARD NO. 846.01

SHEET 1 OF 1

852.01

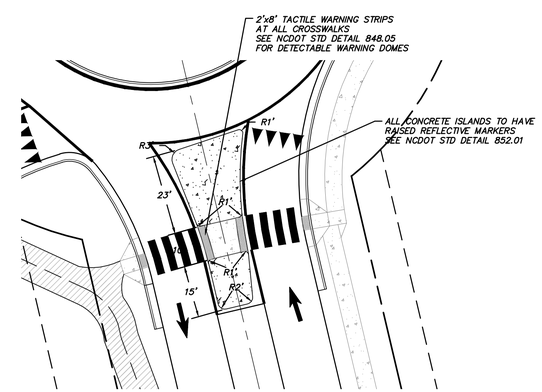

SPLITTER ISLANDS

NOT TO SCALE

REV.NO.	DESCRIPTIONS	DATE
C	ISSUED FOR PERMITTING	01/21/15
B	PRELIMINARY PLAT FENDER CO. REVIEW	10/10/14
A	75% CONSTRUCTION DOCUMENTS TO TLC FOR REVIEW	08/11/14

REVISIONS

PRELIMINARY - DO NOT USE FOR CONSTRUCTION

SEAL 038577 NORTH CAROLINA PROFESSIONAL ENGINEER SEAL RICHARD A. MUSSEN 01-21-15

McKIM&CREED
243 North Front Street
Wilmington, North Carolina 28401
Phone: (910)343-1048, Fax: (910)251-8282

NC LIC. No. F-1222
www.mckimcreed.com

Trask Land CO INC
1202 Eastwood Road
Wilmington, NC 28403
(910) 799-8755

BLAKE FARM

BLAKE FARM

TOPSAIL TOWNSHIP
PENDER COUNTY NORTH CAROLINA

ROUNDABOUT DETAILS

DATE:	9 JANUARY 2015
MCE PROJ. #	6525-0001
DRAWN	CDN
DESIGNED	RAC
CHECKED	RAM
PROJ. MGR.	RAM

SCALE
HORIZONTAL: N/A
VERTICAL: N/A

M&C FILE NUMBER CT501

DRAWING NUMBER 63

STATUS: FINAL PLAN NOT FOR CONSTRUCTION

REVISION C

S:\6525\0001\80-Drawings\CT501_065250001.dwg, 1/27/2015 8:35:43 PM, cmursey

	PAVEMENT SCHEDULE
C1	2" ASPHALT CONCRETE SURFACE COARSE, TYPE S9.5B AT AN AVERAGE RATE OF 224 LBS. PER SQ. YD.
D1	2.5" ASPHALT CONCRETE INTERMEDIATE COURSE, TYPE I 19.0 B AT AN AVERAGE RATE OF 285 LBS. PER SQ. YD.
E1	3.0" ASPHALT CONCRETE BASE COURSE, TYPE B 25.0B AT A RATE OF 342 LBS. PER SQ. YD.
J	8.0" AGGREGATE BASE COURSE
J1	6" AGGREGATE BASE COURSE TO BE INSTALLED UNDER ALL CURB AND GUTTER
R1	1'-6" MEDIAN CURB AND GUTTER (846.01)
R2	2'6-6" CONCRETE CURB AND GUTTER (846.01)
R3	9"X12" CONCRETE CURB (846.01)
T	EARTH MATERIAL - SUBGRADE SOILS

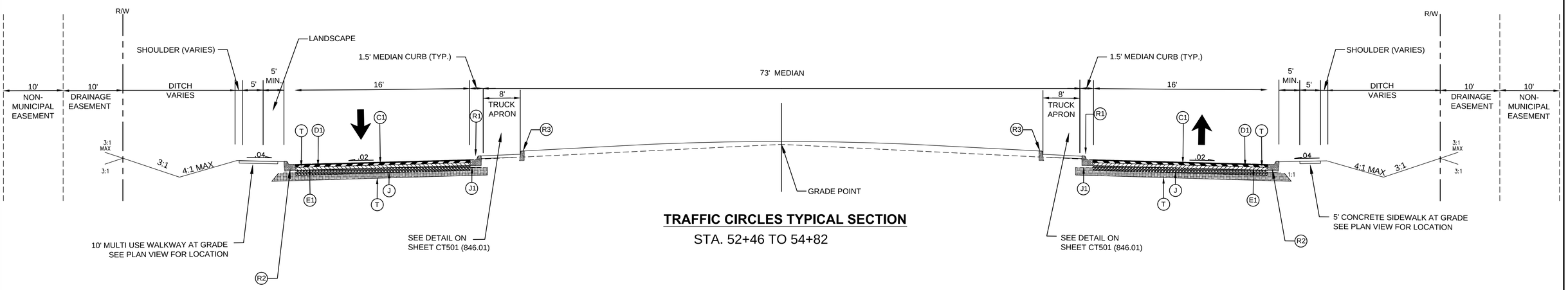

TRAFFIC CIRCLES TYPICAL SECTION

STA. 52+46 TO 54+82

REV.NO.	DESCRIPTIONS	DATE
C	ISSUED FOR PERMITTING	01/21/15
B	PRELIMINARY PLAT PENDER CO. REVIEW	10/10/14
A	75% CONSTRUCTION DOCUMENTS TO TLC FOR REVIEW	08/11/14

REVISIONS

PRELIMINARY- DO NOT USE FOR CONSTRUCTION

SEAL

NORTH CAROLINA PROFESSIONAL SEAL 038577 ENGINEER RICHARD A. ... 01-21-15

McKIM&CREED
243 North Front Street
Wilmington, North Carolina 28401
Phone: (910)343-1048, Fax: (910)251-8282
NC LIC. No. F-1222
www.mckimcreed.com

Trask Land CO INC
1202 Eastwood Road
Wilmington, NC 28403
(910) 799-8755

BLAKE FARM

BLAKE FARM
TOPSAIL TOWNSHIP
PENDER COUNTY NORTH CAROLINA

ROUNDABOUT SECTION

DATE:	9 JANUARY 2015
MCE PROJ. #	6525-0001
DRAWN	CDN
DESIGNED	RAC
CHECKED	RAM
PROJ. MGR.	RAM

SCALE
HORIZONTAL: N/A
VERTICAL: N/A

M&C FILE NUMBER CT502
DRAWING NUMBER 64

STATUS: FINAL PLAN NOT FOR CONSTRUCTION
REVISION C

S:\6525\0001\80-Drawings\CT502_065250001.dwg, 1/27/2015 8:37:46 PM, cnursey

STATE OF NORTH CAROLINA DEPT. OF TRANSPORTATION DIVISION OF HIGHWAYS RALEIGH, N.C. — 1-12

ENGLISH STANDARD DRAWING FOR METHOD OF PIPE INSTALLATION — FLEXIBLE PIPE

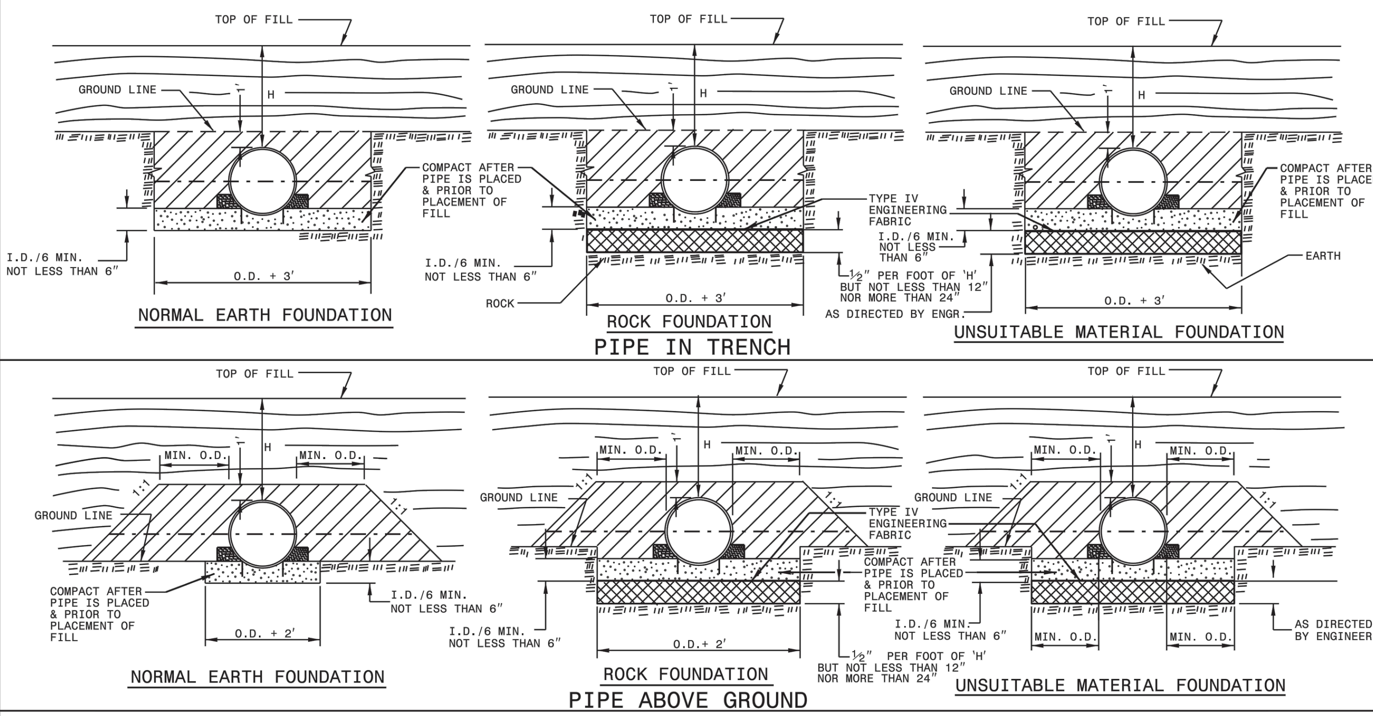

GENERAL NOTES:

I.D. = THE MAXIMUM HORIZONTAL INSIDE DIAMETER DIMENSION.

O.D. = THE MAXIMUM HORIZONTAL OUTSIDE DIAMETER DIMENSION.

H = THE FILL HEIGHT MEASURED VERTICALLY AT ANY POINT ALONG THE PIPE FROM THE TOP OF THE PIPE TO THE TOP OF THE EMBANKMENT AT THAT POINT.

TAKE CARE TO FULLY COMPACT HAUNCH ZONE OF PIPE BACKFILL.

LOOSELY PLACED SELECT MATERIAL CLASS III OR CLASS II, TYPE 1 FOR PIPE BEDDING. LEAVE SECTION DIRECTLY BENEATH PIPE UNCOMPACTED AS PIPE SEATING AND BACKFILL WILL ACCOMPLISH COMPACTION.

DO NOT OPERATE HEAVY EQUIPMENT OVER ANY PIPE CULVERT UNTIL THE PIPE CULVERT HAS BEEN PROPERLY BACKFILLED AND COVERED WITH AT LEAST 3 FEET OF APPROVED MATERIAL.

SPRINGLINE OF PIPE

SELECT BACKFILL MATERIAL CLASS III OR CLASS II, TYPE 1 ABOVE AND BELOW SPRINGLINE.

APPROVED SUITABLE LOCAL MATERIAL.

UNDISTURBED EARTH MATERIAL

SELECT MATERIAL CLASS V OR VI FOR FOUNDATION CONDITIONING. ENCAPSULATE WITH ENGINEERING FABRIC AS DIRECTED BY THE ENGINEER.

SHEET 1 OF 3 — 300.01

STATE OF NORTH CAROLINA DEPT. OF TRANSPORTATION DIVISION OF HIGHWAYS RALEIGH, N.C. — 1-12

ENGLISH STANDARD DRAWING FOR CONCRETE CATCH BASIN 12" THRU 54" PIPE

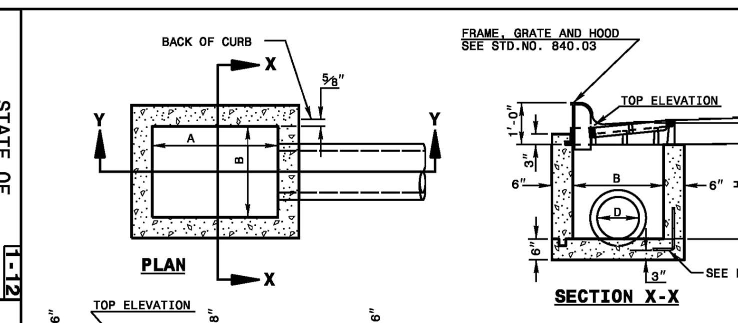

GENERAL NOTES:

USE CLASS "B" CONCRETE THROUGHOUT.

PROVIDE ALL CATCH BASINS OVER 3'-6" IN DEPTH WITH STEPS 12" ON CENTER. USE STEPS WHICH COMPLY WITH STD. DRAWING 840.66.

OPTIONAL CONSTRUCTION - MONOLITHIC POUR, 2" KEYWAY, OR #4 BAR DOWELS AT 12" CENTERS AS DIRECTED BY THE ENGINEER.

USE FORMS FOR THE CONSTRUCTION OF THE BOTTOM SLAB.

IF REINFORCED CONCRETE PIPE IS SET IN BOTTOM SLAB OF BOX, ADD TO SLAB AS SHOWN ON STD. NO. 840.00.

USE TYPE "E", "F" AND "G" GRATES UNLESS OTHERWISE INDICATED.

FOR 8'-0" IN HEIGHT OR LESS USE 6" WALLS AND BOTTOM SLAB. OVER 8'-0" TO 16'-0" IN HEIGHT USE 8" WALLS AND BOTTOM SLAB. ADJUST QUANTITIES ACCORDINGLY.

CONSTRUCT WITH PIPE CROWNS MATCHING.

CHAMFER ALL EXPOSED CORNERS 1".

DRAWING NOT TO SCALE.

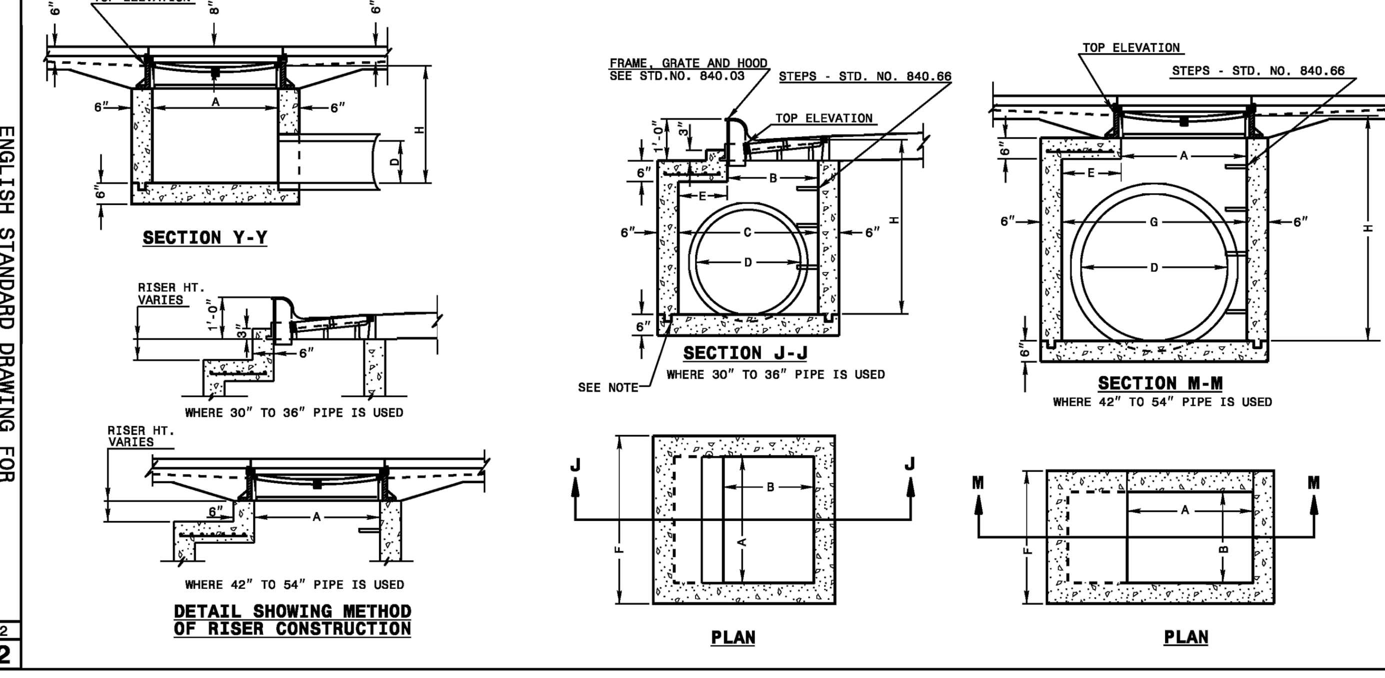

SHEET 1 OF 2 — 840.02

STATE OF NORTH CAROLINA DEPT. OF TRANSPORTATION DIVISION OF HIGHWAYS RALEIGH, N.C. — 1-12

ENGLISH STANDARD DRAWING FOR FRAME, GRATES, AND HOOD FOR USE ON STANDARD CATCH BASIN

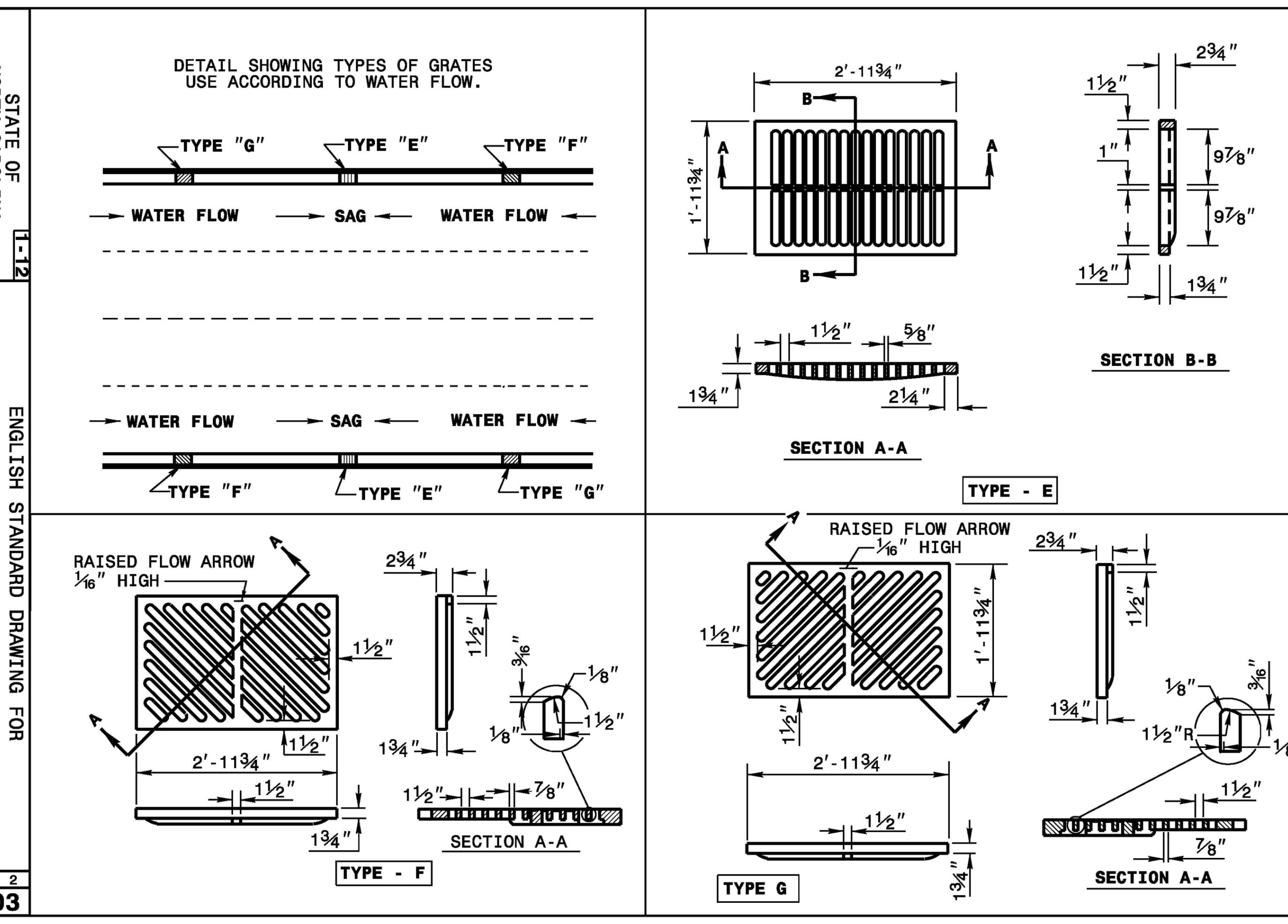

SHEET 2 OF 2 — 840.03

STATE OF NORTH CAROLINA DEPT. OF TRANSPORTATION DIVISION OF HIGHWAYS RALEIGH, N.C. — 1-12

ENGLISH STANDARD DRAWING FOR BRICK CATCH BASIN 12" THRU 54" PIPE

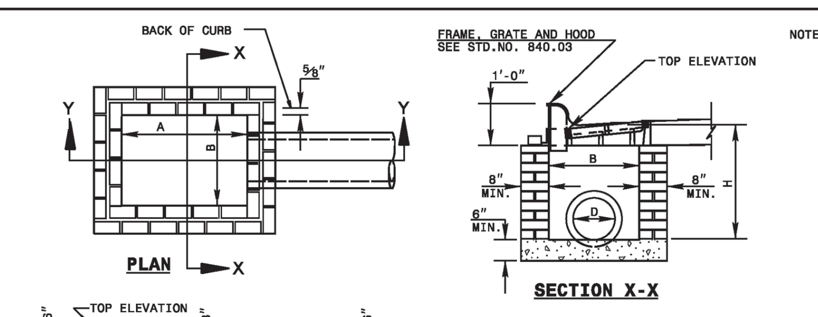

NOTES: MORTAR JOINTS ½" +/- ⅛" THICK.

USE CLASS "B" CONCRETE THROUGHOUT.

USE FORMS FOR CONSTRUCTION OF THE BOTTOM SLAB.

DEDUCT FOR PIPE(S) FROM TOTAL CU. YDS. OF BRICK MASONRY.

USE #4 BAR DOWELS AT 12" CENTERS.

PROVIDE ALL CATCH BASINS OVER 3'-6" IN DEPTH WITH STEPS 12" ON CENTER. USE STEPS WHICH COMPLY WITH STD. DRAWING 840.66.

USE TYPE "E", "F" AND "G" GRATES UNLESS OTHERWISE INDICATED.

USE BRICK OR CONCRETE BLOCK WHICH COMPLIES WITH THE REQUIREMENTS OF SECTION 840 OF THE STANDARD SPECIFICATIONS.

IF REINFORCED CONCRETE PIPE IS SET IN BOTTOM SLAB OF BOX, ADD TO SLAB AS SHOWN ON STD. NO. 840.00.

FOR 8'-0" IN HEIGHT OR LESS, USE 8" WALL. OVER 8'-0" IN HEIGHT, USE 12" WALL TO 6'-0" FROM TOP OF WALL AND 8" WALL FOR THE REMAINING 6'-0". QUANTITES TO BE ADJUSTED ACCORDINGLY.

CONSTRUCT WITH PIPE CROWNS MATCHING.

CHAMFER ALL EXPOSED CORNERS 1".

DRAWING NOT TO SCALE.

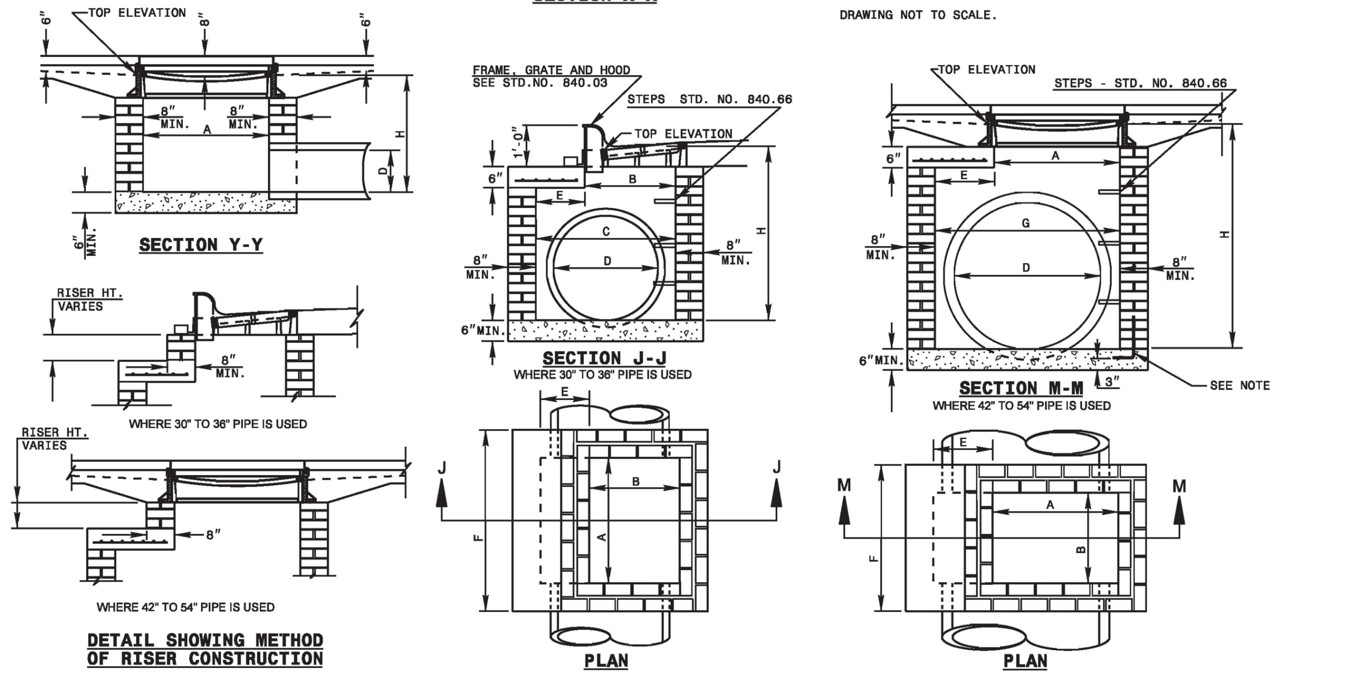

SHEET 1 OF 2 — 840.01

STATE OF NORTH CAROLINA DEPT. OF TRANSPORTATION DIVISION OF HIGHWAYS RALEIGH, N.C. — 1-12

ENGLISH STANDARD DRAWING FOR CONCRETE CATCH BASIN 12" THRU 54" PIPE

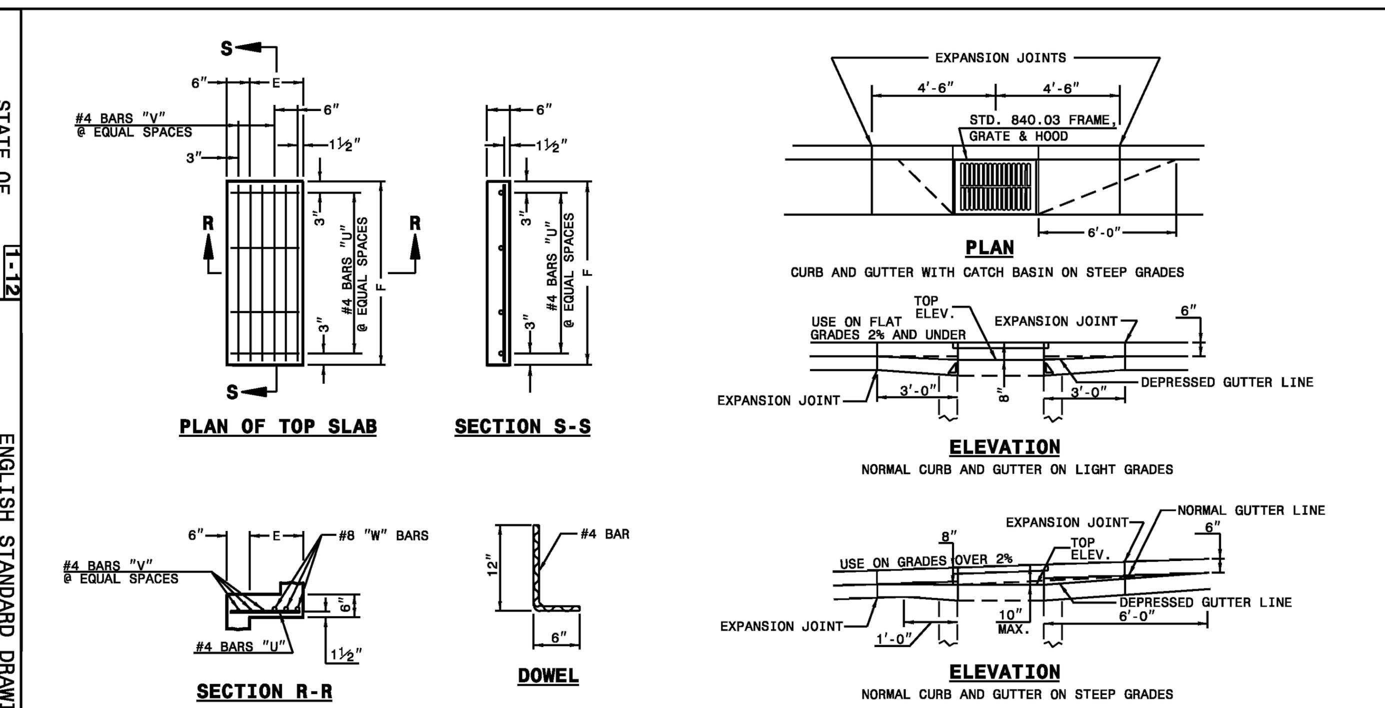

MINIMUM DIMENSIONS AND QUANTITIES FOR CONCRETE CATCH BASIN(BASED ON MIN. HEIGHT, H, WITH NO RISER) *

DIMENSIONS OF BOX AND PIPE						COVER DIMENSION		BARS-U		BARS-V		BARS-W		TOTAL LBS.	CU.YDS. CONC. IN BOX			DEDUCTIONS ONE PIPE	
PIPE	SPAN	WIDTH	WIDTH	SPAN	MIN. HEIGHT										TOP SLAB	BOTTOM SLAB	TOT. CONC. FOR MINIMUM HEIGHT, H		
D	A	B	C	G	H	E	F	NO.	LENGTH	NO.	LENGTH	NO.	LENGTH					C.M.	R.C.
12"	3'-0"	2'-2"	--	--	2'-9"	--	--	--	--	--	--	--	--	--	--	0.235	0.772	0.015	0.026
15"	3'-0"	2'-2"			3'-0"											0.235	0.829	0.023	0.036
18"	3'-0"	2'-2"			3'-3"											0.235	0.887	0.033	0.049
24"	3'-0"	2'-2"			3'-9"											0.235	1.001	0.059	0.085
30"	3'-0"	2'-2"	3'-4"		4'-3"	1'-2"	4'-0"	4	1'-5"	2	3'-9"	3	3'-9"	39	0.123	0.321	1.433	0.092	0.127
36"	3'-0"	2'-2"	3'-10"		4'-9"	1'-8"	4'-0"	4	1'-11"	3	3'-9"	3	3'-9"	43	0.161	0.358	1.714	0.132	0.178
42"	3'-0"	2'-2"		4'-5"	5'-3"	1'-5"	3'-2"	4	1'-8"	2	2'-11"	3	2'-11"	32	0.112	0.318	1.738	0.180	0.243
48"	3'-0"	2'-2"		5'-0"	5'-9"	2'-0"	3'-2"	4	2'-3"	3	2'-11"	3	2'-11"	35	0.145	0.352	2.052	0.235	0.317
54"	3'-0"	2'-2"		5'-7"	6'-3"	2'-7"	3'-2"	4	2'-10"	5	2'-11"	3	2'-11"	41	0.180	0.386	2.387	0.297	0.401

* RISER HAS .228 CUBIC YARDS OF CONCRETE PER FOOT HEIGHT

SHEET 2 OF 2 — 840.02

STATE OF NORTH CAROLINA DEPT. OF TRANSPORTATION DIVISION OF HIGHWAYS RALEIGH, N.C. — 1-12

ENGLISH STANDARD DRAWING FOR DRAINAGE STRUCTURE STEPS

NOTES:
INSTALL ALL STEPS PROTRUDING 4" FROM INSIDE FACE OF STRUCTURE WALL.
STEPS DIFFERING IN DIMENSIONS, CONFIGURATION, OR MATERIALS FROM THOSE SHOWN MAY ALSO BE USED PROVIDED THE CONTRACTOR HAS FURNISHED THE ENGINEER WITH DETAILS OF THE PROPOSED STEPS AND HAS RECEIVED WRITTEN APPROVAL FROM THE ENGINEER FOR THE USE OF SUCH STEPS.

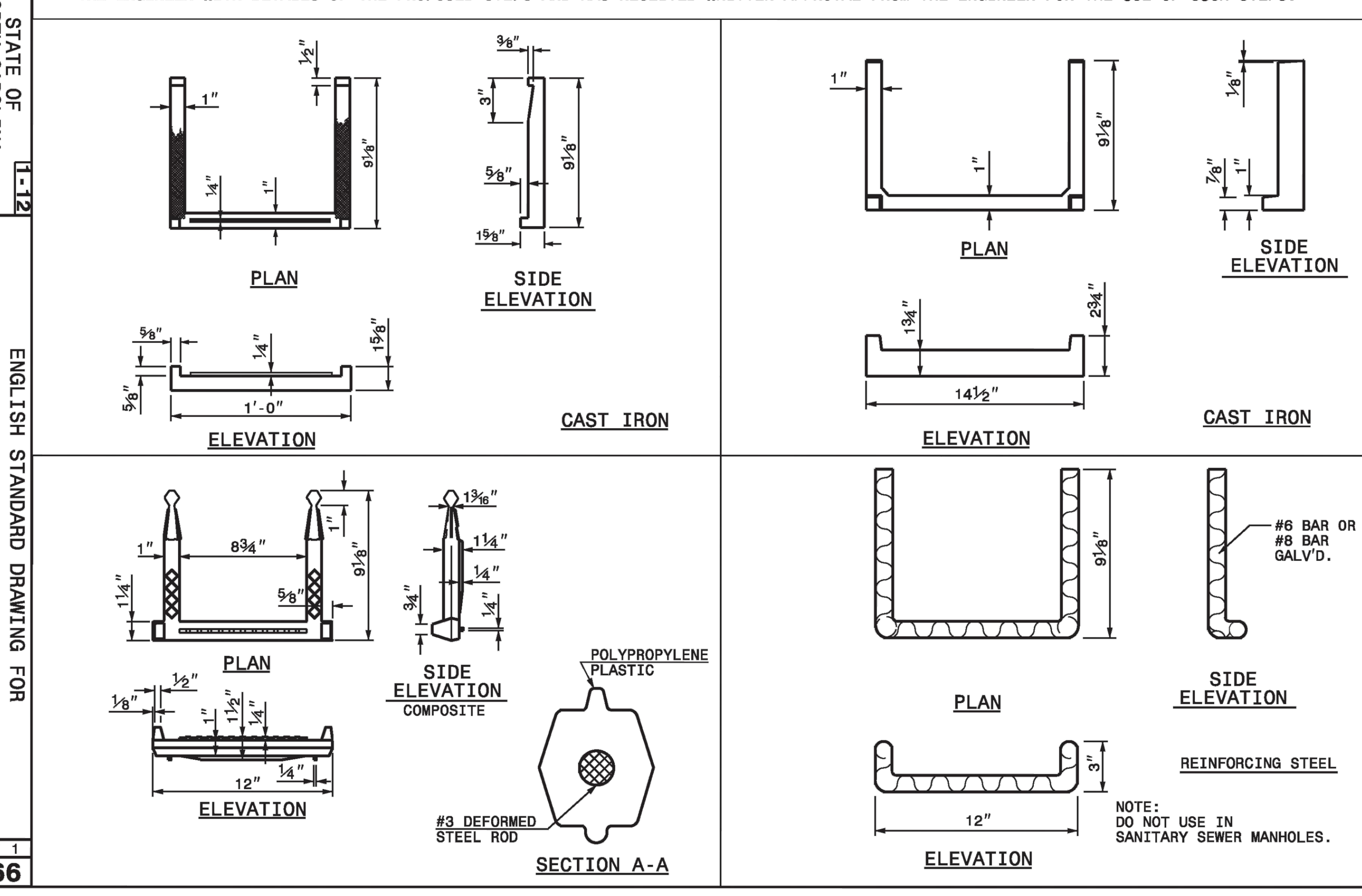

SHEET 1 OF 1 — 840.66

STATE OF NORTH CAROLINA DEPT. OF TRANSPORTATION DIVISION OF HIGHWAYS RALEIGH, N.C. — 1-12

ENGLISH STANDARD DRAWING FOR BRICK CATCH BASIN 12" THRU 54" PIPE

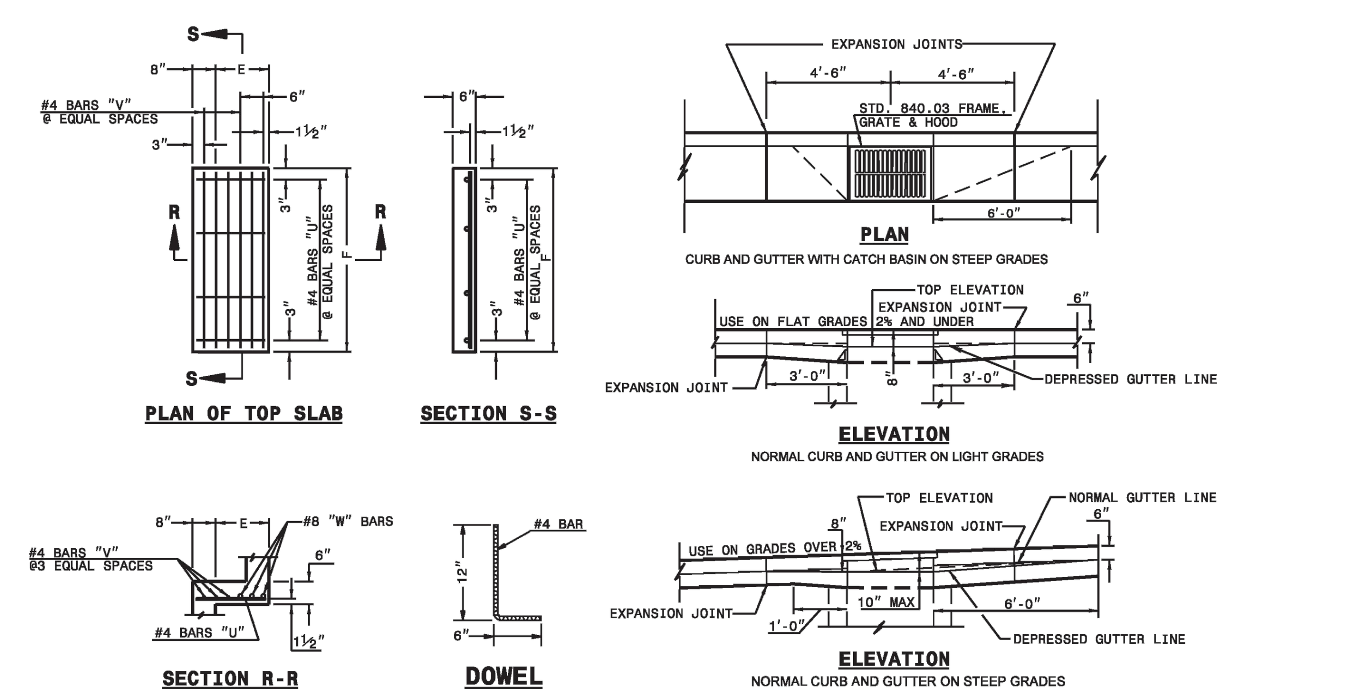

MINIMUM DIMENSIONS AND QUANTITIES FOR BRICK CATCH BASIN(BASED ON MIN. HEIGHT, H, WITH NO RISER)*

DIMENSIONS OF BOX AND PIPE						TOP SLAB DIMENSIONS		BARS-U		BARS-V		BARS-W		TOTAL LBS.	CU.YDS. CONC. IN BOX			BRICK MASONRY		DEDUCTIONS ONE PIPE	
PIPE	SPAN	WIDTH	WIDTH	SPAN	MIN. HEIGHT										TOP SLAB	BOTTOM SLAB	TOTAL CONC.	BRICK MSNR. IN WALLS	TOTAL BRICK AND CONCRETE		
D	A	B	C	G	H	E	F	NO.	LENGTH	NO.	LENGTH	NO.	LENGTH							C.M.	R.C.
12"	3'-0"	2'-2"	--	--	2'-9"	--	--	--	--	--	--	--	--	--	--	0.281	0.281	0.883	1.164	0.020	0.042
15"	3'-0"	2'-2"			3'-0"											0.281	0.281	0.963	1.244	0.031	0.047
18"	3'-0"	2'-2"			3'-3"											0.281	0.281	1.043	1.324	0.044	0.065
24"	3'-0"	2'-2"			3'-9"											0.281	0.281	1.204	1.485	0.078	0.121
30"	3'-0"	2'-2"	3'-4"		4'-3"	1'-2"	4'-4"	4	1'-6"	3	4'-1"	3	4'-1"	45	0.147	0.374	0.521	1.606	2.217	0.122	0.184
36"	3'-0"	2'-2"	3'-10"		4'-9"	1'-8"	4'-4"	4	2'-0"	4	4'-1"	3	4'-1"	49	0.187	0.415	0.602	1.914	2.516	0.176	0.261
42"	3'-0"	2'-2"		4'-5"	5'-3"	1'-5"	3'-6"	4	1'-9"	3	3'-3"	3	3'-3"	38	0.135	0.373	0.508	2.152	2.660	0.240	0.371
48"	3'-0"	2'-2"		5'-0"	5'-9"	2'-0"	3'-6"	4	2'-6"	4	3'-3"	3	3'-3"	41	0.173	0.410	0.583	2.415	2.998	0.313	0.477
54"	3'-0"	2'-2"		5'-7"	6'-3"	2'-7"	3'-6"	4	3'-0"	6	3'-3"	3	3'-3"	47	0.211	0.448	0.659	2.806	3.465	0.396	0.595

* RISER HAS .321 CUBIC YARDS OF BRICK MASONRY PER FOOT HEIGHT

SHEET 2 OF 2 — 840.01

STATE OF NORTH CAROLINA DEPT. OF TRANSPORTATION DIVISION OF HIGHWAYS RALEIGH, N.C. — 1-12

ENGLISH STANDARD DRAWING FOR FRAME, GRATES, AND HOOD FOR USE ON STANDARD CATCH BASIN

NOTE: USE TYPE "E", "F" AND "G" GRATE UNLESS OTHERWISE NOTED.

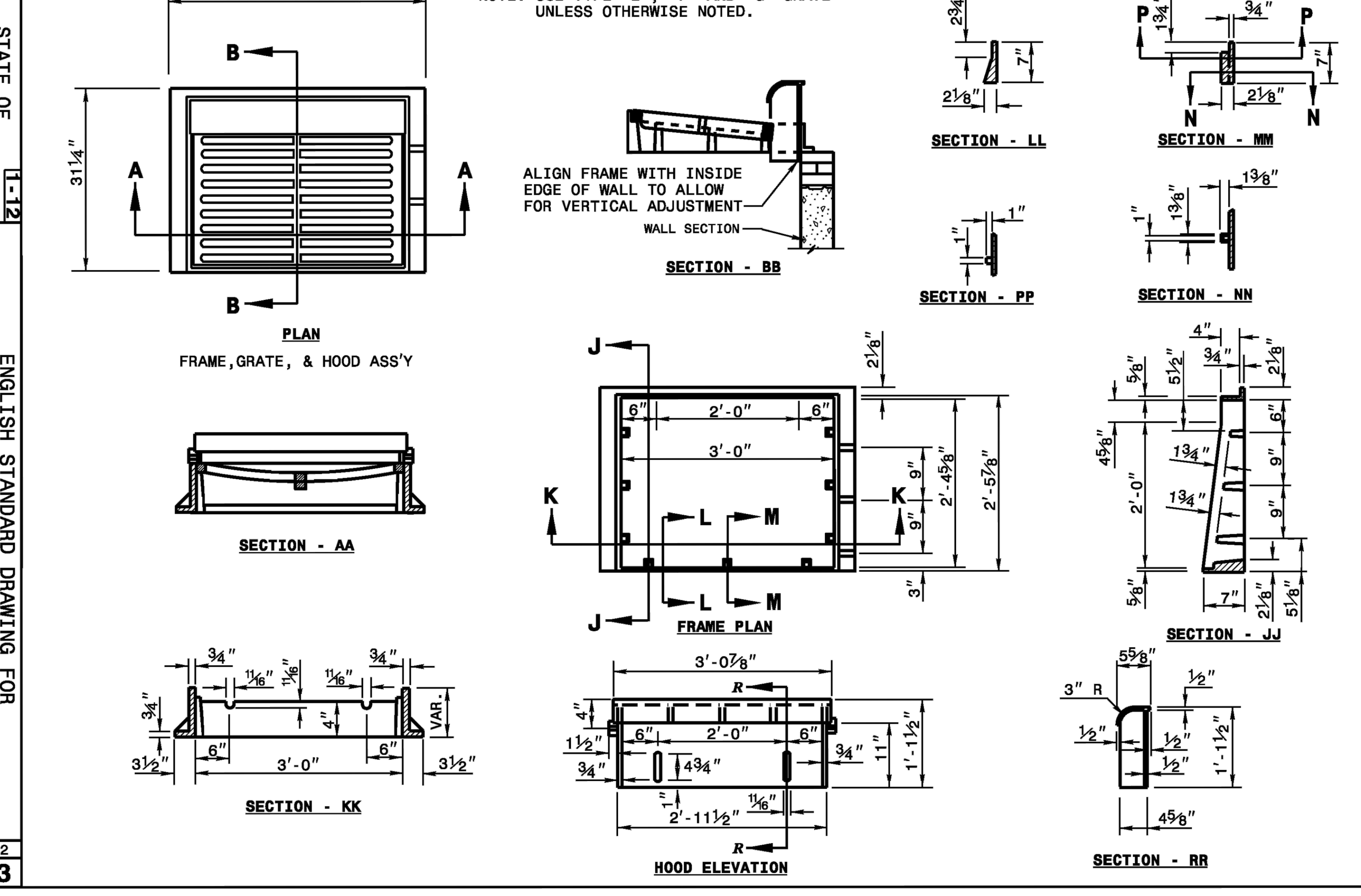

SHEET 1 OF 2 — 840.03

REV.NO.	DESCRIPTIONS	DATE
C	ISSUED FOR PERMITTING	01/21/15
B	PRELIMINARY PLAT PENDER CO. REVIEW	10/10/14
A	75% CONSTRUCTION DOCUMENTS TO TLC FOR REVIEW	08/11/14

REVISIONS

SEAL — PRELIMINARY- DO NOT USE FOR CONSTRUCTION

SEAL — NORTH CAROLINA PROFESSIONAL ENGINEER SEAL 038577 RICHARD A. ... 01-21-15

McKIM&CREED
243 North Front Street
Wilmington, North Carolina 28401
Phone: (910)343-1048, Fax: (910)251-8282
NC LIC. No. F-1222
www.mckimcreed.com

Trask Land CO INC
1202 Eastwood Road
Wilmington, NC 28403
(910) 799-8755

BLAKE FARM — EST 1946

BLAKE FARM
TOPSAIL TOWNSHIP
PENDER COUNTY NORTH CAROLINA

ROADWAY DETAILS

DATE:	9 JANUARY 2015
MCE PROJ. #	6525-0001
DRAWN	CDN
DESIGNED	RAC
CHECKED	RAM
PROJ. MGR.	RAM

SCALE — HORIZONTAL: N/A — VERTICAL: N/A

M&C FILE NUMBER: CT503 — DRAWING NUMBER: 65

STATUS: FINAL PLAN NOT FOR CONSTRUCTION — REVISION C

S:\6525\0001\80-Drawings\CT503_065250001.dwg, 1/27/2015 8:38:03 PM, cnursey

848.05 — ENGLISH STANDARD DRAWING FOR CURB RAMP — PROPOSED CURB AND GUTTER (SHEET 1 OF 3)

STATE OF NORTH CAROLINA DEPT. OF TRANSPORTATION DIVISION OF HIGHWAYS RALEIGH, N.C. 1-12

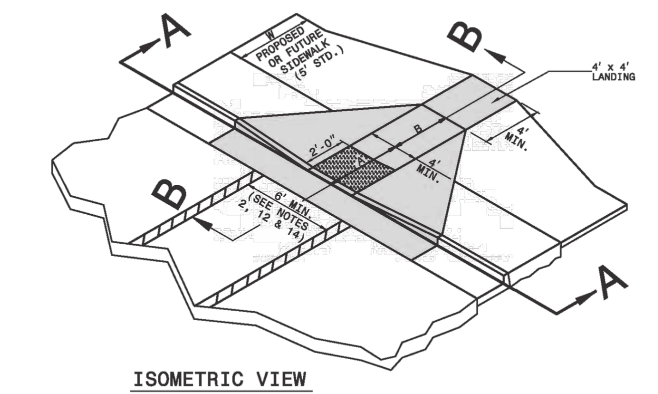

ISOMETRIC VIEW

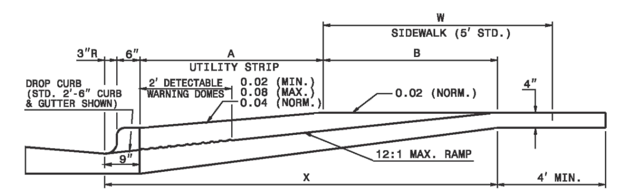

SECTION B-B

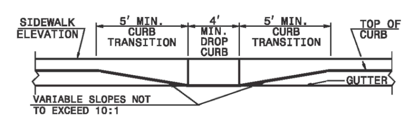

SECTION A-A

PAY LIMITS FOR CURB RAMP

NOTES:
1. DETECTABLE WARNING DOMES WILL COVER 2'-0" LENGTH AND FULL WIDTH OF THE RAMP FLOOR AS SHOWN ON THE DETAILS.
2. DETECTABLE WARNING DOMES WILL CONTRAST VISIBILITY WITH ADJOINING SURFACE, EITHER LIGHT-ON-DARK, OR DARK-ON-LIGHT SEQUENCE COVERING THE ENTIRE RAMP.

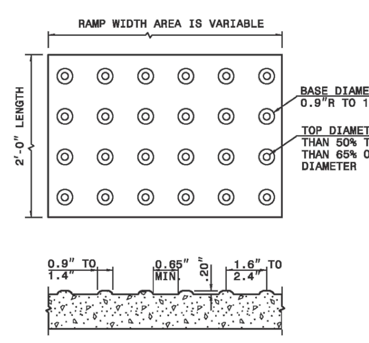

DETECTABLE WARNING DOMES

W	A	W+A+9"	X	B
5'	0.0'	5.8'	5.8'	5.0'*
6'	0.0'	6.8'	6.8'	6.0'**
7'	0.0'	7.8'	7.3'	6.5'**
8'	0.0'	8.8'	7.3'	6.5'**
5'	2.0'	7.8'	7.8'	5.0'
5'	2.5'	8.3'	8.1'	4.8'
5'	3.0'	8.8'	8.3'	4.4'
5'	3.5'	9.3'	8.4'	4.1'
5'	4.0'	9.8'	8.6'	3.8'
5'	4.5'	10.3'	8.7'	3.4'
5'	5.0'	10.8'	8.9'	3.1'

B = X-(A+9")
B = DISTANCE FROM FRONT EDGE OF SIDEWALK TO BACK POINT OF 12:1 (8.33%) SLOPE.
* BACK OF SIDEWALK DROP REQUIRED FOR ALL SIDEWALK SLOPES.
** BACK OF SIDEWALK DROP REQUIRED FOR SIDEWALK SLOPES 0.04.

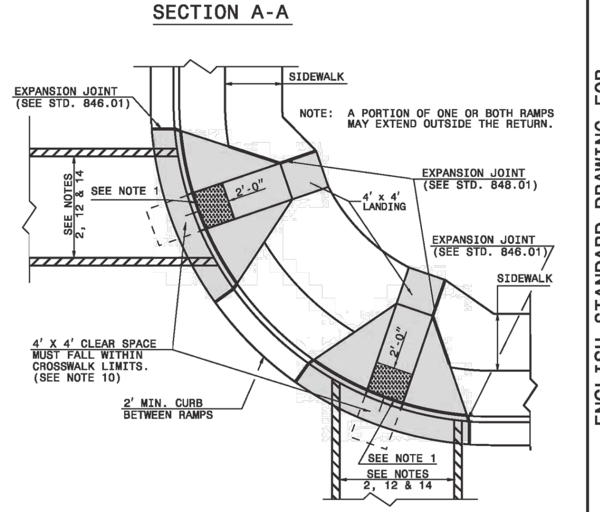

PLAN VIEW
DUAL RAMPS
ANY RADII
(4' MIN. FLOOR WIDTH)

852.06 — ENGLISH STANDARD DRAWING FOR METHOD FOR PLACEMENT OF DROP INLETS IN CONCRETE ISLANDS (SHEET 1 OF 1)

STATE OF NORTH CAROLINA DEPT. OF TRANSPORTATION DIVISION OF HIGHWAYS RALEIGH, N.C. 1-12

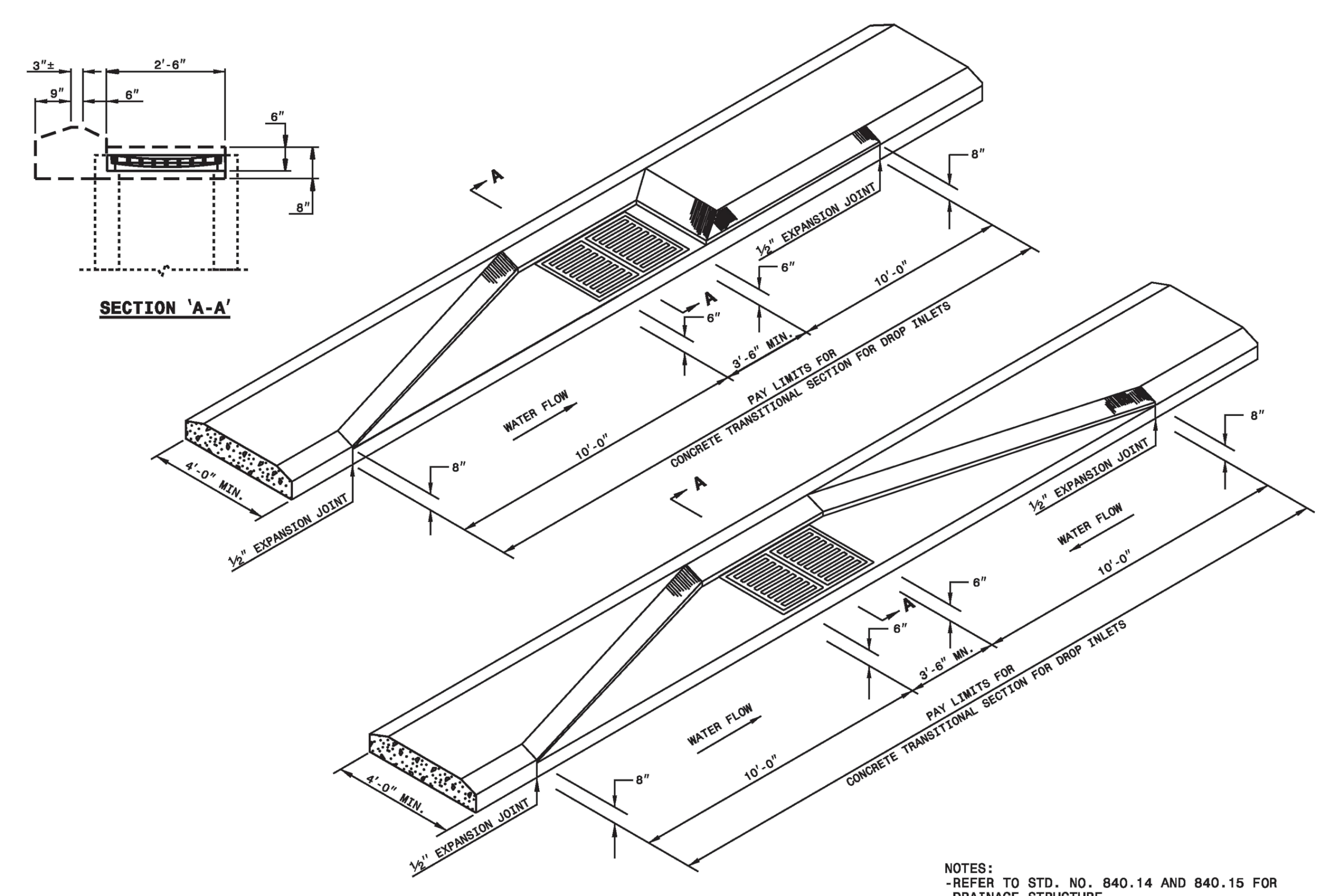

NOTES:
- REFER TO STD. NO. 840.14 AND 840.15 FOR DRAINAGE STRUCTURE.
- REFER TO STD. NO. 840.16 FOR GRATE AND FRAME.

1205.07 — ENGLISH STANDARD DRAWING FOR PAVEMENT MARKINGS — PEDESTRIAN CROSSWALKS (SHEET 1 OF 1)

STATE OF NORTH CAROLINA DEPT. OF TRANSPORTATION DIVISION OF HIGHWAYS RALEIGH, N.C. 1-12

HI-VISIBILITY CROSSWALK

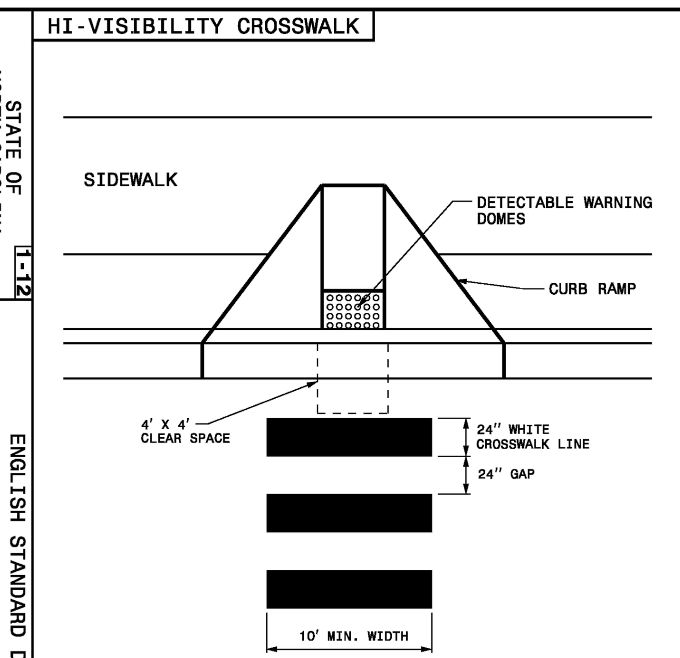

STANDARD CROSSWALK

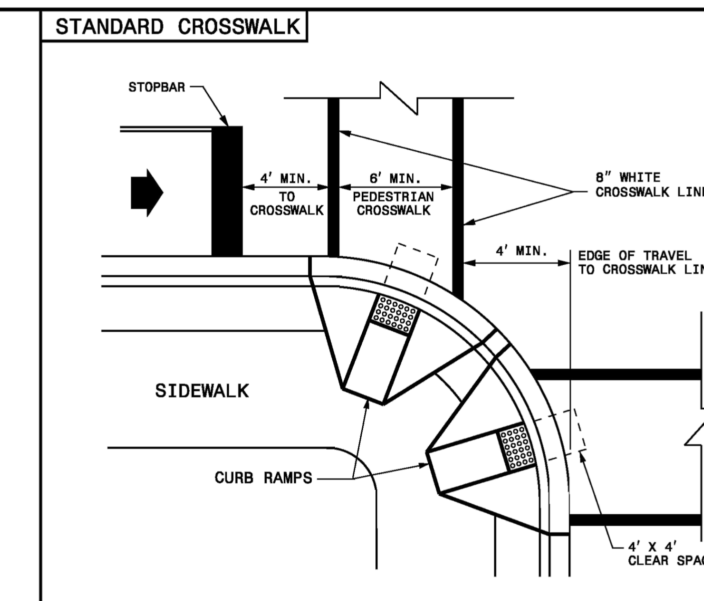

1- THE MINIMUM WIDTH OF STANDARD CROSSWALKS IS 6 FEET. THE MINIMUM WIDTH OF HI-VISIBILITY CROSSWALKS IS 10 FEET.
2- SET BACK DISTANCE FROM INSIDE CROSSWALK MARKING TO NEAREST EDGE OF TRAVEL IS 4' MIN.
3- BEYOND THE CURB FACE, A CLEAR SPACE OF 4' X 4' FEET MINIMUM SHALL BE PROVIDED WITHIN THE WIDTH OF THE CROSSWALK.
4- PLACE STOP BARS A MINIMUM OF 4 FEET FROM NEAREST CROSSWALK LINE. STOP BARS AT SIGNALIZED INTERSECTIONS SHOULD BE COORDINATED WITH THE SIGNAL DESIGN SECTION OR AS DIRECTED BY THE ENGINEER.
5- CURB RAMPS SHALL BE CONSTRUCTED IN ACCORDANCE TO THE LATEST NCDOT ROADWAY STANDARD DRAWINGS.

LEGEND
- DIRECTION OF TRAFFIC FLOW
- CURB RAMP WITH DETECTABLE WARNING DOMES

848.05 — ENGLISH STANDARD DRAWING FOR CURB RAMP — PROPOSED CURB AND GUTTER (SHEET 2 OF 3)

STATE OF NORTH CAROLINA DEPT. OF TRANSPORTATION DIVISION OF HIGHWAYS RALEIGH, N.C. 1-12

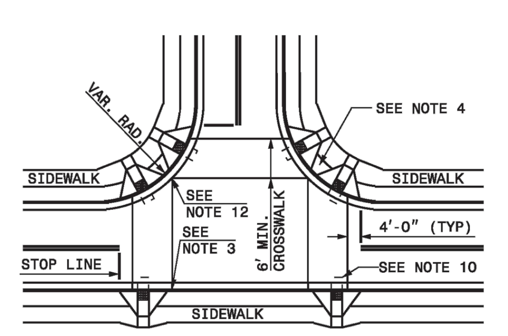

DETAIL SHOWING TYPICAL LOCATION OF CURB RAMPS, PEDESTRIAN CROSSWALKS AND STOP LINES FOR TEE INTERSECTIONS

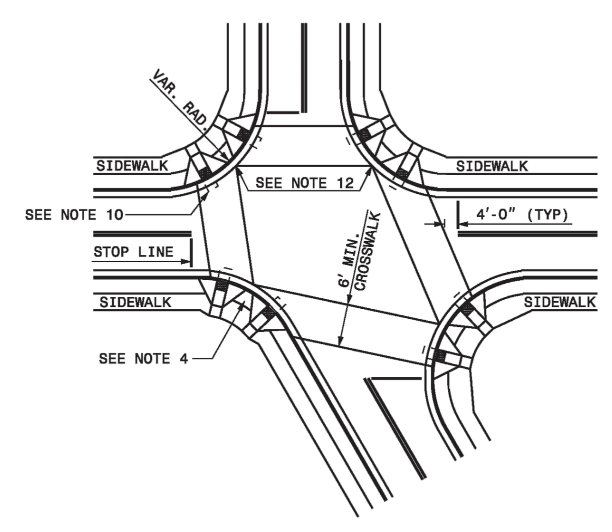

DETAIL SHOWING TYPICAL LOCATION OF CURB RAMPS, PEDESTRIAN CROSSWALKS AND STOP LINES

ROADWAY PLAN SYMBOL (CR) FOR PROPOSED CURB RAMP

PROPOSED CURB RAMP W/ LANDING
PROPOSED OR FUTURE SIDEWALK

ALLOWABLE LOCATIONS
DUAL RAMP RADII...........ANY

876.02 — ENGLISH STANDARD DRAWING FOR GUIDE FOR RIP RAP AT PIPE OUTLETS (SHEET 1 OF 1)

STATE OF NORTH CAROLINA DEPT. OF TRANSPORTATION DIVISION OF HIGHWAYS RALEIGH, N.C. 1-12

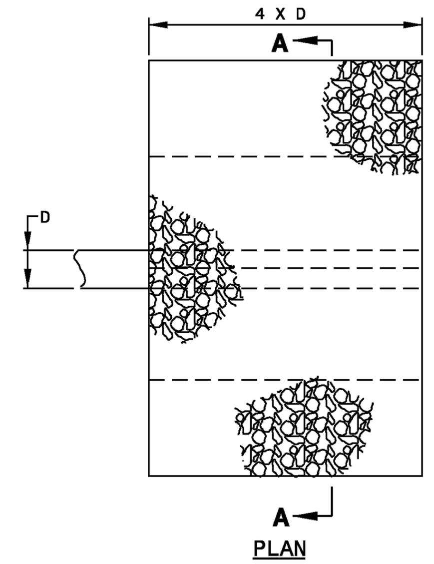

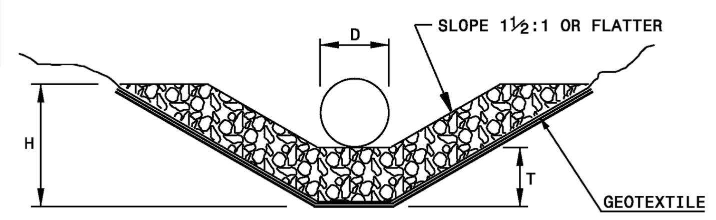

SECTION A-A

PIPE OUTLET WITH DITCH

H= RIP RAP TO TOP OF PIPE (MAX. H = D + T)
T= 15" CLASS I RIP RAP, UNLESS OTHERWISE SHOWN ON PLANS
T= 12" CLASS 'B' RIP RAP, UNLESS OTHERWISE SHOWN ON PLANS

D	OUTLET W/DITCH					OUTLET W/O DITCH				
	CLASS 'B' RIP RAP		CLASS I RIP RAP			CLASS 'B' RIP RAP		CLASS I RIP RAP		
	TONS	GEO-TEXTILE (S.Y.)	S.Y.	TONS	GEO-TEXTILE (S.Y.)	TONS	GEO-TEXTILE (S.Y.)	S.Y.	TONS	GEO-TEXTILE (S.Y.)
12"	2	5	5	2	5	1	4	2	1	4
15"	2	7	7	3	7	1	5	3	2	6
18"	3	10	9	4	10	2	7	4	2	8
24"	5	14	15	7	15	3	11	7	4	12
30"	8	21	21	11	22	5	16	11	7	17
36"	11	28	29	15	30	7	22	16	10	23
42"	15	37	39	20	39	10	28	22	13	30
48"	-	-	49	26	50	-	-	28	17	38
54"	-	-	60	33	62	-	-	36	21	47
60"	-	-	73	40	75	-	-	44	26	56
66"	-	-	87	48	89	-	-	54	32	67
72"	-	-	102	57	104	-	-	64	38	78

NOTE:
FOR CALCULATION PURPOSES
CLASS 'B' RIP RAP = 100 LBS./FT^3
CLASS I RIP RAP = 105 LBS./FT^3

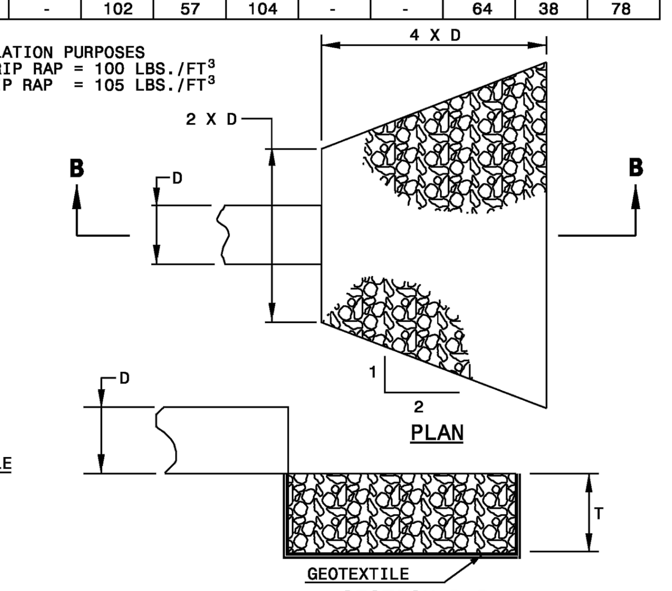

SECTION B-B

PIPE OUTLET WITHOUT DITCH

1606.01 — ENGLISH STANDARD DRAWING FOR SPECIAL SEDIMENT CONTROL FENCE (SHEET 1 OF 1)

STATE OF NORTH CAROLINA DEPT. OF TRANSPORTATION DIVISION OF HIGHWAYS RALEIGH, N.C. 1-12

NOTES

USE NO. 5 OR NO. 57 STONE FOR SEDIMENT CONTROL STONE.

USE HARDWARE CLOTH 24 GAUGE WIRE MESH WITH ¼ INCH MESH OPENINGS.

INSTALL 5 FT. SELF FASTENER ANGLE STEEL POST 2 FT. DEEP MINIMUM.

SPACE POST A MAXIMUM OF 3 FT.

FOR INSTALLATION BETWEEN SECTIONS OF SILT FENCE, EXTEND SEDIMENT CONTROL STONE A MINIMUM OF 12" IN WIDTH ON EACH SIDE OF SPECIAL SEDIMENT CONTROL FENCE SECTION.

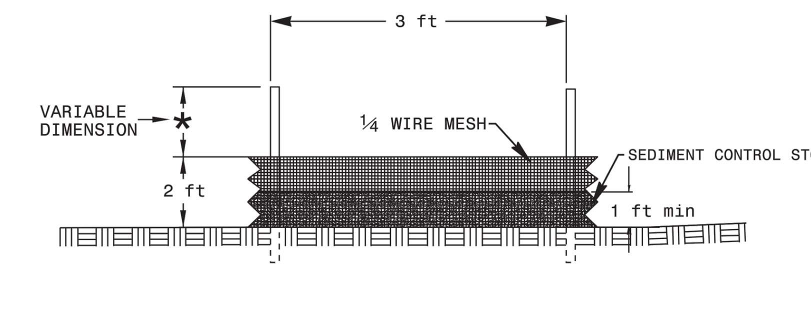

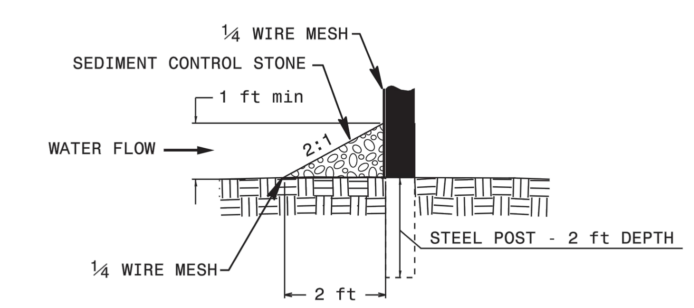

848.05 — ENGLISH STANDARD DRAWING FOR CURB RAMPS — NOTES (SHEET 3 OF 3)

STATE OF NORTH CAROLINA DEPT. OF TRANSPORTATION DIVISION OF HIGHWAYS RALEIGH, N.C. 1-12

NOTES:
1. CONSTRUCT THE RAMP SURFACE TO BE STABLE, FIRM, AND SLIP RESISTANT. CONSTRUCT THE CURB RAMP TYPE AS SHOWN IN THE PAVEMENT MARKING PLANS OR AS DIRECTED BY THE ENGINEER.
2. LOCATE CURB RAMPS AND PLACE PEDESTRIAN CROSSWALK MARKINGS AS SHOWN IN THE PAVEMENT MARKING PLANS. WHEN FIELD ADJUSTMENTS REQUIRE MOVING CURB RAMPS OR MARKINGS AS SHOWN, CONTACT THE SIGNING AND DELINEATION UNIT OR LOCATE AS DIRECTED BY THE ENGINEER.
3. COORDINATE THE CURB RAMP AND THE PEDESTRIAN CROSSWALK MARKINGS SO A 4'x4' CLEAR SPACE AT THE BASE OF THE CURB RAMP WILL FALL WITHIN THE PEDESTRIAN CROSSWALK LINES.
4. SET BACK DISTANCE FROM INSIDE CROSSWALK MARKING TO NEAREST EDGE OF TRAVEL LANE IS 4' MINIMUM.
5. REFER TO THE PAVEMENT MARKING PLANS FOR STOP BAR LOCATIONS AT SIGNALIZED INTERSECTIONS. IF A PAVEMENT MARKING PLAN IS NOT PROVIDED, CONTACT THE SIGNAL DESIGN SECTION FOR THE STOP BAR LOCATIONS OR LOCATE AS DIRECTED BY THE ENGINEER.
6. TERMINATE PARKING A MINIMUM OF 20' BACK OF A PEDESTRIAN CROSSWALK.
7. CONSTRUCT CURB RAMPS A MINIMUM OF 4' WIDE.
8. CONSTRUCT THE RUNNING SLOPE OF THE RAMP 8.33% MAXIMUM.
9. ALLOWABLE CROSS SLOPE ON SIDEWALKS AND CURB RAMPS WILL BE 2% MAXIMUM.
10. CONSTRUCT THE SIDE FLARE SLOPE A MAXIMUM OF 10% MEASURED ALONG THE CURB LINE.
11. CONSTRUCT THE COUNTER SLOPE OF THE GUTTER OR STREET AT THE BASE OF THE CURB RAMP A MAXIMUM OF 5% AND MAINTAIN A SMOOTH TRANSITION.
12. CONSTRUCT LANDINGS FOR SIDEWALK A MINIMUM OF 4'x4' WITH A MAXIMUM SLOPE OF 2% IN ANY DIRECTION. CONSTRUCT LANDINGS FOR MEDIAN ISLANDS A MINIMUM OF 5'x5' WITH A MAXIMUM SLOPE OF 2% IN ANY DIRECTION.
13. TO USE A MEDIAN ISLAND AS A PEDESTRIAN REFUGE AREA, MEDIAN ISLANDS WILL BE A MINIMUM OF 6' WIDE. CONSTRUCT MEDIAN ISLANDS TO PROVIDE PASSAGE OVER OR THROUGHT THE ISLAND.
14. SMALL CHANNELIZATION ISLANDS THAT CAN NOT PROVIDE A 5'X5' LANDING AT THE TOP OF A RAMPS, WILL BE CUT THROUGH LEVEL WITH THE SURFACE STREET.
15. CURB RAMPS WITH RETURNED CURBS MAY BE USED ONLY WHERE PEDESTRIANS WOULD NOT NORMALLY WALK ACROSS THE RAMP. THE ADJACENT SURFACE IS PLANTING OR OTHER NON-WALKING SURFACE OR THE SIDE APPROACH IS SUBSTANTIALLY OBSTRUCTED.
16. PLACE A ½" EXPANSION JOINT WHERE THE CONCRETE CURB RAMP JOINS THE CURB AS SHOWN IN ROADWAY STANDARD DRAWING 848.01
17. PLACE ALL PEDESTRIAN PUSH BUTTON ACTUATORS AND CROSSING SIGNALS AS SHOWN IN THE PLANS OR AS SHOWN IN THE MUTCD.
18. CURB RAMPS THROUGH MEDIAN ISLANDS, SINGLE RAMPS AT DUAL CROSSWALKS OR LIMITED R/W SITUATIONS, WILL BE HANDLED BY SPECIAL DETAILS. CONTACT THE CONTRACT STANDARDS AND DEVELOPMENT UNIT FOR THE DETAILS OR FOR A SPECIAL DESIGN.

1101.02 — ENGLISH STANDARD DRAWING FOR TEMPORARY LANE CLOSURES — 2-LANE, 2-WAY ROADWAY-1 LANE CLOSED (SHEET 1 OF 15)

STATE OF NORTH CAROLINA DEPT. OF TRANSPORTATION DIVISION OF HIGHWAYS RALEIGH, N.C. 1-12

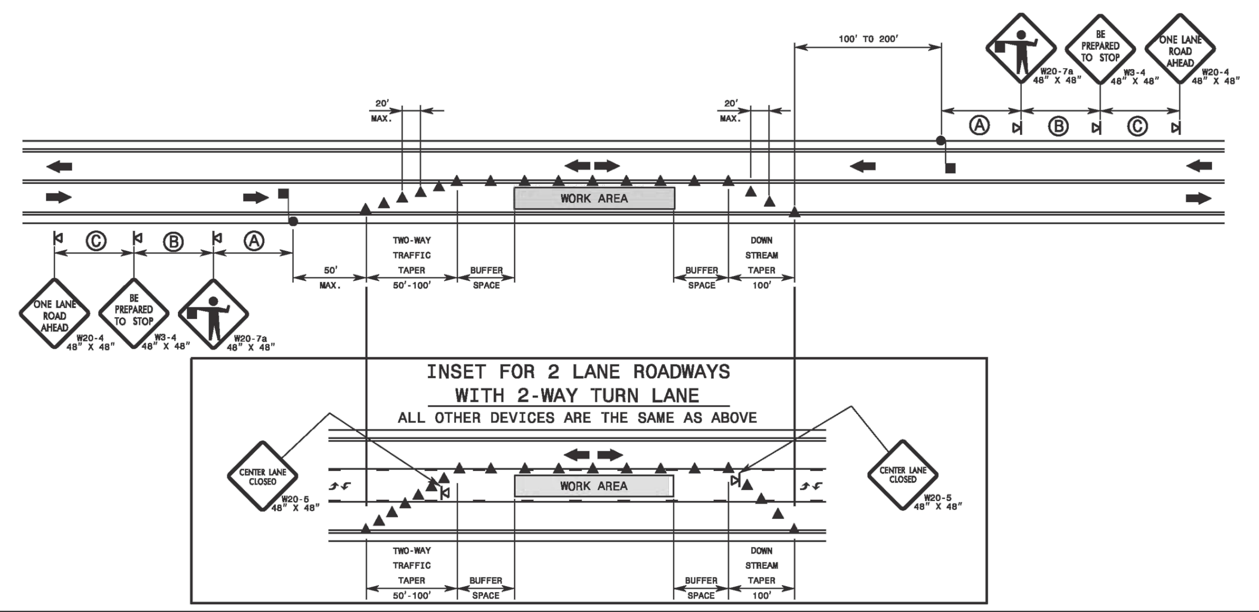

GENERAL NOTES FOR FLAGGER OPERATIONS
1- REFER TO STD. 1101.11 SHEET 4 FOR SIGN SPACING.
2- INSTALL LANE CLOSURES WITH THE TRAFFIC FLOW, BEGINNING WITH DEVICES ON THE UPSTREAM SIDE OF TRAFFIC.
3- REMOVE LANE CLOSURES AGAINST THE TRAFFIC FLOW, BEGINNING WITH DEVICES ON THE DOWNSTREAM SIDE OF TRAFFIC.
4- PLACE CONES THRU THE WORK AREA AT THE MAXIMUM SPACING EQUAL IN FEET TO 2 TIMES THE POSTED SPEED LIMIT.
5- EXTEND LANE CLOSURES AT THE BUFFER SPACE SUCH THAT STOPPING SIGHT DISTANCE IS PROVIDED TO THE FLAGGER (REFER TO STD. 1101.11 SHEET 2).
6- DO NOT STOP TRAFFIC IN ANY ONE DIRECTION FOR MORE THAN 5 MINUTES AT A TIME.
7- DRUMS OR SKINNY-DRUMS MAY BE USED IN LIEU OF CONES. REFER TO ROADWAY STANDARD DRAWING 1180.01 FOR SKINNY-DRUM REQUIREMENTS.
8- USE FLAGGERS TO CONTROL TRAFFIC AT INTERSECTIONS AFFECTED BY THE LANE CLOSURE. SUPPLEMENT FLAGGERS LOCATED AT INTERSECTIONS WITH FLAGGER AHEAD SIGNS (W20-7a) PLACED APPROXIMATELY 250 FT. IN ADVANCE OF THE FLAGGER. FOR SIGNALIZED INTERSECTIONS PLACE SIGNALS IN THE FLASH MODE AND RECOMMEND THE USE OF LAW ENFORCEMENT.
9- REFER TO 2009 MUTCD, CHAPTER 6, FOR FLAGGER CONTROL, REQUIREMENTS, AND PROCEDURES.
10- DO NOT EXCEED A 1 MILE LANE CLOSURE LENGTH UNLESS OTHERWISE SHOWN IN THE TMP OR AS DIRECTED BY THE ENGINEER.

GENERAL NOTES FOR PILOT CAR OPERATIONS
1- USE PILOT CARS WHEN DIRECTED BY THE ENGINEER.
2- IF ROADWAY WIDTH IS LESS THAN 22 FEET (EOP TO EOP), CONES MAY NOT BE REQUIRED ALONG WORK AREA, AND AT THE DISCRETION OF THE ENGINEER, CONES MAY BE OMITTED ALONG THE WORK AREA IF USING A PILOT CAR.
3- CONES ARE ALWAYS REQUIRED IN THE UPSTREAM AND DOWNSTREAM TAPERS.
4- MOUNT SIGN G20-4 "PILOT CAR FOLLOW ME" AT A CONSPICUOUS POSITION ON THE REAR OF THE PILOT VEHICLE.
5- DO NOT INSTALL MORE THAN ONE (1) MILE OF LANE CLOSURE, MEASURED FROM THE BEGINNING OF THE MERGE TAPER TO THE END OF THE LANE CLOSURE.
6- ADVISE RESIDENTS AND BUSINESSES WITHIN THE LANE CLOSURE LIMITS ABOUT METHODS OF SAFE EGRESS AND INGRESS FROM DRIVEWAYS DURING FLAGGING AND PILOT CAR OPERATIONS.

LEGEND
- FLAGGER
- CONE
- PORTABLE SIGN
- DIRECTION OF TRAFFIC FLOW

REV.NO.	DESCRIPTIONS	DATE
C	ISSUED FOR PERMITTING	01/21/15
B	PRELIMINARY PLAT PENDER CO. REVIEW	10/10/14
A	75% CONSTRUCTION DOCUMENTS TO TLC FOR REVIEW	08/11/14

REVISIONS

SEAL
PRELIMINARY- DO NOT USE FOR CONSTRUCTION

SEAL
NORTH CAROLINA PROFESSIONAL SEAL 038577 ENGINEER RICHARD A. CHRISTENSEN 01-21-15

McKIM&CREED
243 North Front Street
Wilmington, North Carolina 28401
Phone: (910)343-1048, Fax: (910)251-8282
NC LIC. No. F-1222
www.mckimcreed.com

Trask Land CO INC
1202 Eastwood Road
Wilmington, NC 28403
(910) 799-8755

BLAKE FARM — EST 1946

BLAKE FARM
TOPSAIL TOWNSHIP
PENDER COUNTY NORTH CAROLINA

ROADWAY DETAILS

DATE:	9 JANUARY 2015
MCE PROJ. #	6525-0001
DRAWN	CDN
DESIGNED	RAC
CHECKED	RAM
PROJ. MGR.	RAM

SCALE — HORIZONTAL: N/A — VERTICAL: N/A

M&C FILE NUMBER CT504
DRAWING NUMBER 66

STATUS: FINAL PLAN NOT FOR CONSTRUCTION
REVISION C

S:\6525\0001\80-Drawings\CT504_065250001.dwg, 1/27/2015 8:38:29 PM, cnursey

838.01 — Sheet 1 of 3

STATE OF NORTH CAROLINA
DEPT. OF TRANSPORTATION
DIVISION OF HIGHWAYS
RALEIGH, N.C.
1-12

ENGLISH STANDARD DRAWING FOR
CONCRETE ENDWALL FOR SINGLE AND DOUBLE PIPE CULVERTS
15" THRU 48" PIPE - 90° SKEW

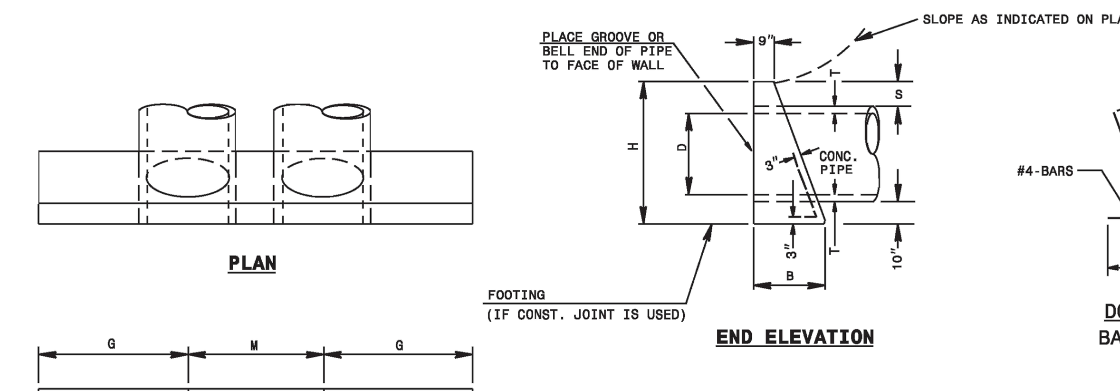

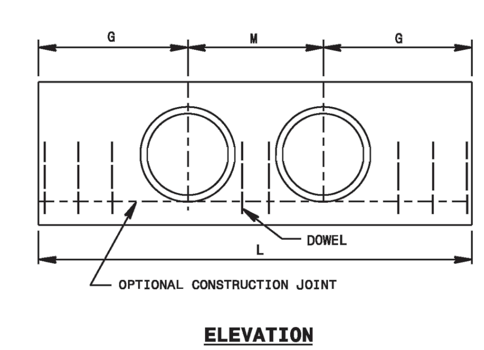

DOWELS IN ENDWALL WITH REINFORCED CONCRETE PIPE

LOC.	PIPE DIA.	15"	18"	24"	30"	36"	42"		48"		15"	18"	24"	30"	36"	42"		48"	
		SINGLE PIPE									DOUBLE PIPE								
	BARS	"X"	"X"	"X"	"X"	"X"	"X"	Y*	"X"	Y*	"X"	"X"	"X"	"X"	"X"	"X"	Y*	"X"	Y*
G	QTY.	2	2	3	3	4	4		5		2	2	3	3	4	4		5	
M	QTY.	-	-	-	-	-	-	2	-	2	1	1	2	2	2	2	2	3	2
G	QTY.	2	2	3	3	4	4		5		2	2	3	3	4	4		5	
TOTAL LBS.		9	9	14	14	19	55		65		12	12	19	19	23	77		92	

DIMENSIONS AND CONCRETE QUANTITIES
USING CONCRETE PIPE

D	H	B	G	T	S	L	YD³	M	L	YD³
	COMMON DIMENSIONS					SINGLE PIPE		DOUBLE PIPE		
15"	3'-3"	1'-8"	2'-9"	2¼"	9½"	5'-6"	0.7	2'-2"	7'-8"	1.0
18"	3'-7"	1'-10"	3'-2"	2½"	10"	6'-4"	1.0	2'-7"	8'-11"	1.3
24"	4'-2"	2'-1"	4'-0"	3"	10"	8'-0"	1.5	3'-5"	11'-5"	2.0
30"	5'-0"	2'-6"	4'-7"	4¼"	11½"	9'-2"	2.3	4'-3"	13'-5"	3.1
36"	5'-8"	2'-8"	5'-6"	4¾"	11½"	11'-0"	3.4	5'-0"	16'-0"	4.5
42"	6'-2"	3'-1"	6'-4"	5¼"	11½"	12'-8"	4.5	5'-10"	18'-6"	6.0
48"	6'-9"	3'-5"	7'-2"	5¾"	11½"	14'-4"	6.0	6'-8"	21'-0"	8.0

*SEE SHEET 3

SHEET 1 OF 3
838.01

STATE OF NORTH CAROLINA DEPT. OF TRANSPORTATION DIVISION OF HIGHWAYS RALEIGH, N.C. 1-12 ENGLISH STANDARD DRAWING FOR CONCRETE ENDWALL FOR SINGLE AND DOUBLE PIPE CULVERTS 15" THRU 48" PIPE - 90° SKEW SHEET 1 OF 3 838.01

838.05 — Sheet 1 of 1

STATE OF NORTH CAROLINA
DEPT. OF TRANSPORTATION
DIVISION OF HIGHWAYS
RALEIGH, N.C.
1-12

ENGLISH STANDARD DRAWING FOR
CONCRETE "L" ENDWALL FOR SINGLE PIPE CULVERTS
15" THRU 48" PIPE

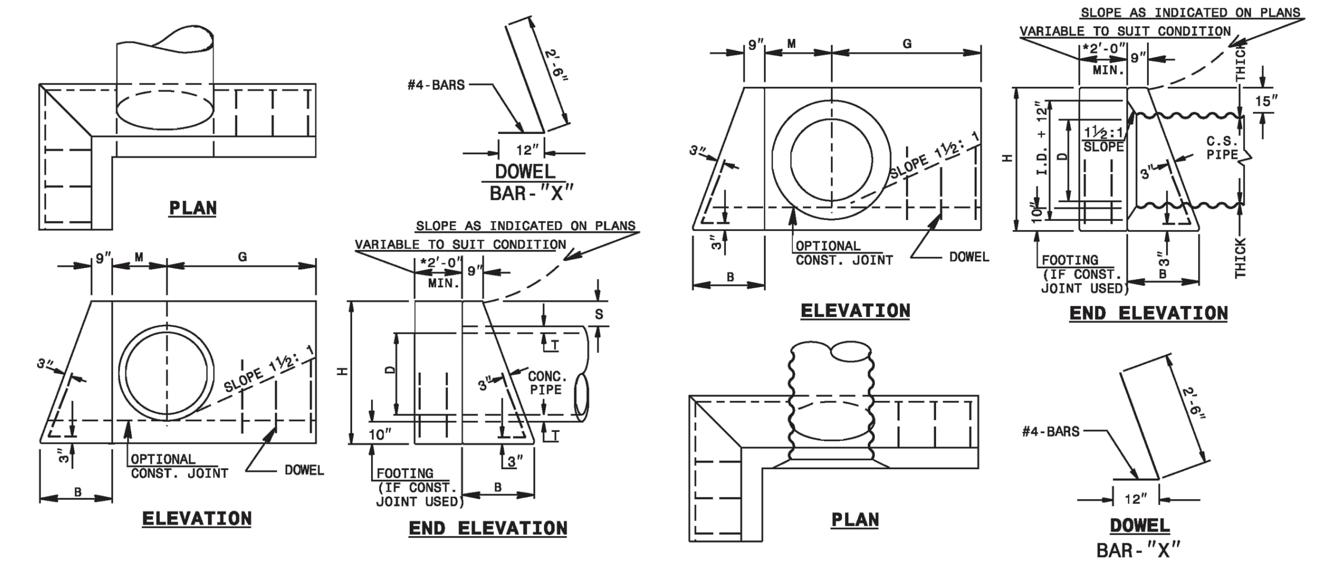

GENERAL NOTES:
- CHAMFER ALL CORNERS 1". USE CLASS "B" CONCRETE.
- PLACE 2 #6 "Y" BARS IN THE TOP OF ALL ENDWALL FOR PIPE CULVERTS 42" AND OVER WITH A MINIMUM OF 3" COVER AND A LENGTH OF 6" LESS THAN ENDWALL LENGTH.
- CONSTRUCT BOTTOM SLAB WITH FORMS.
- WHEN THE CONTRACTOR ELECTS TO USE A CONSTRUCTION JOINT AT THE BOTTOM OF THE PIPE, PLACE BAR "X" DOWELS IN THE BASE AS SHOWN ON PLANS. SPACE BARS APPROXIMATELY ON 12" CENTERS UNLESS OTHERWISE DIRECTED BY THE ENGINEER.
- WHEN THE CONTRACTOR ELECTS TO USE A CONSTRUCTION JOINT AT THE BOTTOM OF THE PIPE AND POUR THE BASE SEPARATELY LEAVE THE POUR ROUGH.
- DO NOT INTERPRET WALL THICKNESS (T) SHOWN FOR THE THICKNESS ACCEPTABLE, BUT IS USED IN COMPUTING ENDWALL QUANTITIES.

REINFORCING QUANTITIES

DIA.	15"	18"	24"	30"	36"	42" C.S.		42" R.C.		48" C.S.		48" R.C.	
BARS	"X"	"X"	"X"	"X"	"X"	"X"	"Y"	"X"	"Y"	"X"	"Y"	"X"	"Y"
QTY.	5	5	6	6	7	7	2	7	2	8	2	8	2
LBS.	12	12	14	14	16	47		49		52		55	

*QUANTITIES BASED ON 2'-0"

DIMENSIONS AND CONCRETE QUANTITIES

D	H	B	G	M	S	T	YD³	H	B	G	M	YD³
	R.C.P. DIMENSIONS AND VOLUMES							C.S.P. DIMENSIONS AND VOLUMES				
15"	3'-4"	1'-8"	2'-6"	1'-1"	10½"	2¼"	1.0	3'-4"	1'-8"	2'-5"	1'-5"	1.0
18"	3'-7"	1'-10"	2'-11"	1'-3"	10"	2½"	1.2	3'-7"	1'-10"	2'-9"	1'-6"	1.3
24"	4'-2"	2'-1"	3'-9"	1'-6"	10"	3"	1.7	4'-1"	2'-1"	3'-6"	1'-9"	1.8
30"	4'-9"	2'-5"	4'-8"	1'-10"	10"	3½"	2.5	4'-7"	2'-4"	4'-3"	2'-0"	2.4
36"	5'-5"	2'-9"	5'-8"	2'-2"	9½"	4¾"	3.6	5'-1"	2'-7"	5'-0"	2'-3"	3.1
42"	6'-0"	3'-0"	6'-7"	2'-5"	9½"	5¼"	4.6	5'-7"	2'-10"	5'-9"	2'-6"	4.0
48"	6'-7"	3'-4"	7'-5"	2'-9"	9½"	5¾"	6.0	6'-1"	3'-1"	6'-6"	2'-9"	5.1

SHEET 1 OF 1
838.05

STATE OF NORTH CAROLINA DEPT. OF TRANSPORTATION DIVISION OF HIGHWAYS RALEIGH, N.C. 1-12 ENGLISH STANDARD DRAWING FOR CONCRETE "L" ENDWALL FOR SINGLE PIPE CULVERTS 15" THRU 48" PIPE SHEET 1 OF 1 838.05

840.22 — Sheet 1 of 1

STATE OF NORTH CAROLINA
DEPT. OF TRANSPORTATION
DIVISION OF HIGHWAYS
RALEIGH, N.C.
1-12

ENGLISH STANDARD DRAWING FOR
FRAMES AND WIDE SLOT SAG GRATES

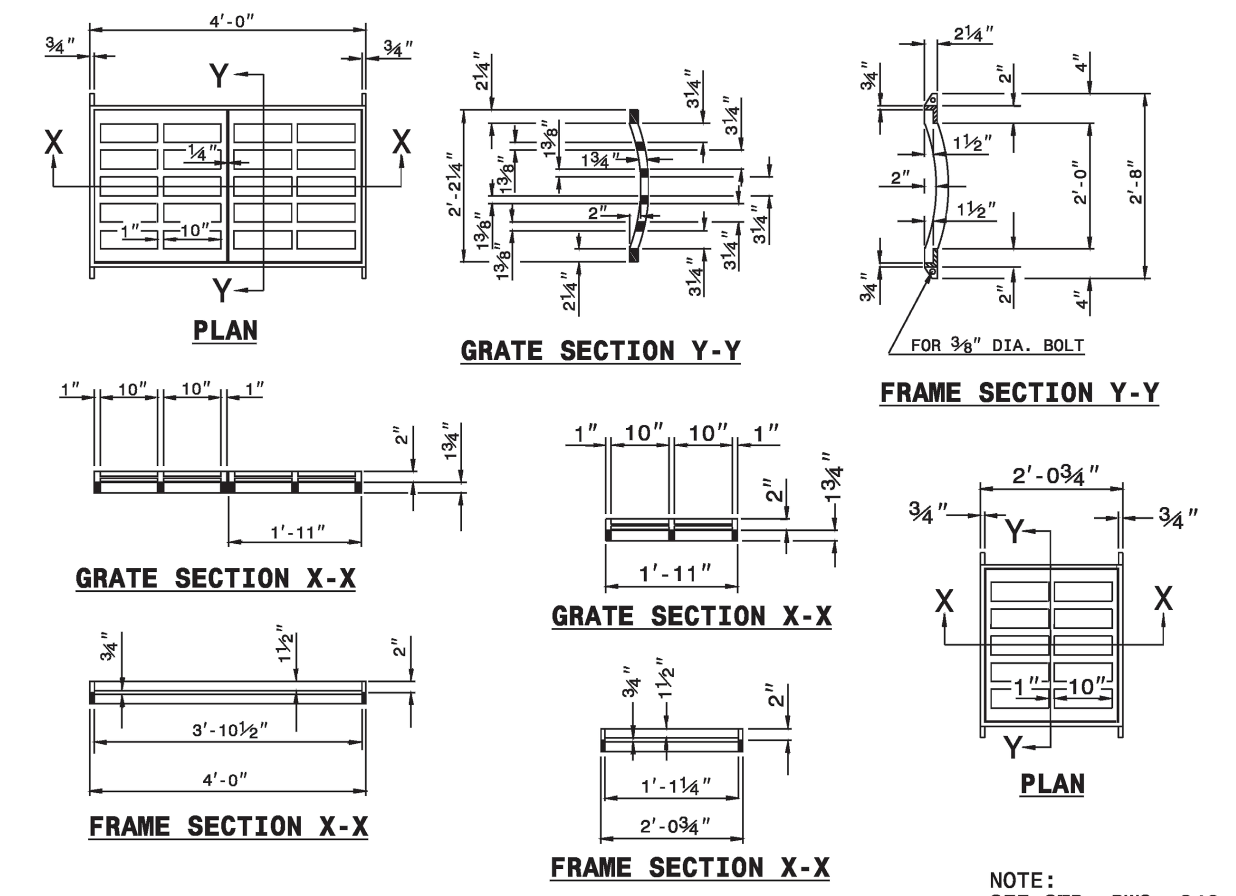

NOTE:
SEE STD. DWG. 840.25 FOR FRAME ANCHORAGE.

SHEET 1 OF 1
840.22

STATE OF NORTH CAROLINA DEPT. OF TRANSPORTATION DIVISION OF HIGHWAYS RALEIGH, N.C. 1-12 ENGLISH STANDARD DRAWING FOR FRAMES AND WIDE SLOT SAG GRATES SHEET 1 OF 1 840.22

838.01 — Sheet 2 of 3

STATE OF NORTH CAROLINA
DEPT. OF TRANSPORTATION
DIVISION OF HIGHWAYS
RALEIGH, N.C.
1-12

ENGLISH STANDARD DRAWING FOR
CONCRETE ENDWALL FOR SINGLE AND DOUBLE PIPE CULVERTS
15" THRU 48" PIPE - 90° SKEW

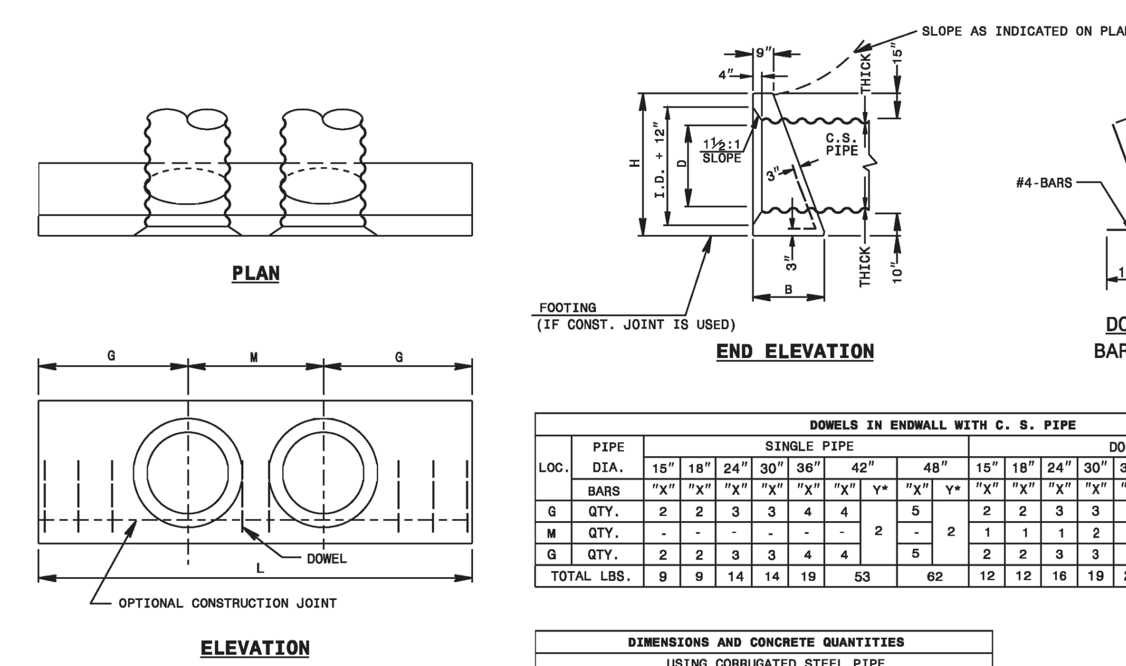

DOWELS IN ENDWALL WITH C. S. PIPE

LOC.	PIPE DIA.	15"	18"	24"	30"	36"	42"		48"		15"	18"	24"	30"	36"	42"		48"	
		SINGLE PIPE									DOUBLE PIPE								
	BARS	"X"	"X"	"X"	"X"	"X"	"X"	Y*	"X"	Y*	"X"	"X"	"X"	"X"	"X"	"X"	Y*	"X"	Y*
G	QTY.	2	2	3	3	4	4		5		2	2	3	3	4	4		5	
M	QTY.	-	-	-	-	-	-	2	-	2	1	1	1	2	2	2	2	2	2
G	QTY.	2	2	3	3	4	4		5		2	2	3	3	4	4		5	
TOTAL LBS.		9	9	14	14	19	53		62		12	12	16	19	23	73		85	

DIMENSIONS AND CONCRETE QUANTITIES
USING CORRUGATED STEEL PIPE

D	H	B	G	L	YD³	M	L	YD³
	COMMON			SINGLE PIPE		DOUBLE PIPE		
15"	3'-4"	1'-8"	2'-6"	5'-0"	0.7	1'-11"	6'-11"	1.0
18"	3'-7"	1'-10"	2'-11"	5'-10"	1.0	2'-3"	8'-1"	1.2
24"	4'-1"	2'-1"	3'-8"	7'-4"	1.4	3'-0"	10'-4"	1.9
30"	4'-7"	2'-4"	4'-5"	8'-10"	2.0	3'-9"	12'-7"	2.7
36"	5'-1"	2'-7"	5'-2"	10'-4"	2.8	4'-6"	14'-10"	3.8
42"	5'-7"	2'-10"	5'-11"	11'-10"	3.8	5'-3"	17'-1"	5.0
48"	6'-1"	3'-1"	6'-8"	13'-4"	4.9	6'-0"	19'-4"	7.5

*SEE SHEET 3

SHEET 2 OF 3
838.01

STATE OF NORTH CAROLINA DEPT. OF TRANSPORTATION DIVISION OF HIGHWAYS RALEIGH, N.C. 1-12 ENGLISH STANDARD DRAWING FOR CONCRETE ENDWALL FOR SINGLE AND DOUBLE PIPE CULVERTS 15" THRU 48" PIPE - 90° SKEW SHEET 2 OF 3 838.01

840.19 — Sheet 1 of 1

STATE OF NORTH CAROLINA
DEPT. OF TRANSPORTATION
DIVISION OF HIGHWAYS
RALEIGH, N.C.
1-12

ENGLISH STANDARD DRAWING FOR
CONCRETE GRATED DROP INLET TYPE 'D'
12" THRU 36" PIPE

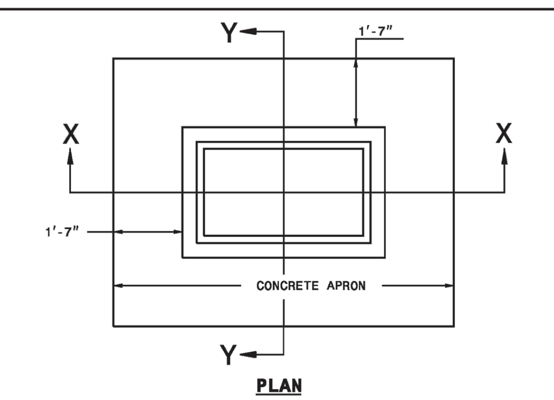

GENERAL NOTES:

USE CLASS "B" CONCRETE THROUGHOUT.

PROVIDE ALL DROP INLETS OVER 3'-6" IN DEPTH WITH STEPS 12" ON CENTER. USE STEPS WHICH COMPLY WITH STD. DRAWING 840.66.

OPTIONAL CONSTRUCTION - MONOLITHIC POUR, 2" KEYWAY, OR #4 BAR DOWELS AT 12" CENTERS AS DIRECTED BY THE ENGINEER.

USE FORMS FOR THE CONSTRUCTION OF THE BOTTOM SLAB.

IF REINFORCED CONCRETE PIPE IS SET IN BOTTOM SLAB OF BOX, ADD TO SLAB AS SHOWN ON STD. NO. 840.00.

CONSTRUCT WITH PIPE CROWNS MATCHING.

MAX. DEPTH OF THIS STRUCTURE FROM TOP OF BOTTOM SLAB TO TOP ELEVATION IS 12 FEET.

USE STANDARD FRAMES AND GRATES 840.22 (SHOWN), 840.24(SHOWN), 840.20, 840.29, AND 840.33.

SEE STANDARD DRAWING 840.25 FOR ATTACHMENT OF FRAMES AND GRATES NOT SHOWN.

CHAMFER ALL EXPOSED CORNERS 1".

DRAWING NOT TO SCALE.

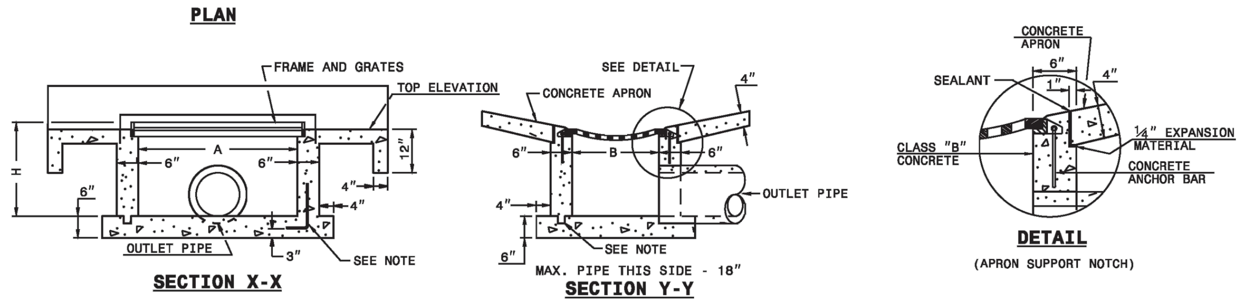

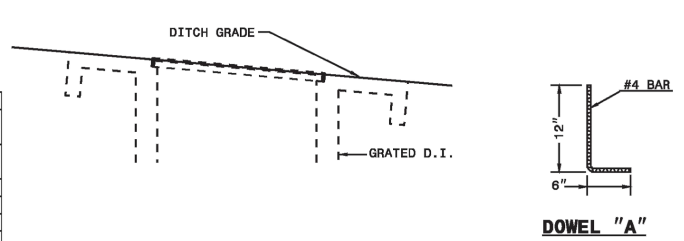

MINIMUM DIMENSIONS AND QUANTITIES FOR CONCRETE GRATED DROP INLET

PIPE D	SPAN A	WIDTH B	HEIGHT H	CUBIC YARDS OF CONCRETE IN BOX: BOTTOM SLAB	H PER FT. HT.	H MIN. TOTAL	TOTAL	DEDUCTIONS FOR ONE PIPE: C.S.	R.C.
12"	3'-8"	2'-0"	1'-8"	0.362	0.247	0.391	0.753	0.020	0.032
15"	3'-8"	2'-0"	1'-11"	0.362	0.247	0.453	0.815	0.023	0.036
18"	3'-8"	2'-0"	2'-2"	0.362	0.247	0.515	0.877	0.033	0.049
24"	3'-8"	2'-0"	2'-8"	0.362	0.247	0.659	1.021	0.059	0.085
30"	3'-8"	2'-0"	3'-2"	0.362	0.247	0.782	1.144	0.092	0.127
36"	3'-8"	2'-0"	3'-8"	0.362	0.247	0.906	1.268	0.132	0.178

SHEET 1 OF 1
840.19

STATE OF NORTH CAROLINA DEPT. OF TRANSPORTATION DIVISION OF HIGHWAYS RALEIGH, N.C. 1-12 ENGLISH STANDARD DRAWING FOR CONCRETE GRATED DROP INLET TYPE 'D' 12" THRU 36" PIPE SHEET 1 OF 1 840.19

840.26 — Sheet 1 of 2

STATE OF NORTH CAROLINA
DEPT. OF TRANSPORTATION
DIVISION OF HIGHWAYS
RALEIGH, N.C.
1-12

ENGLISH STANDARD DRAWING FOR
BRICK GRATED DROP INLET TYPE 'A'
12" THRU 72" PIPE

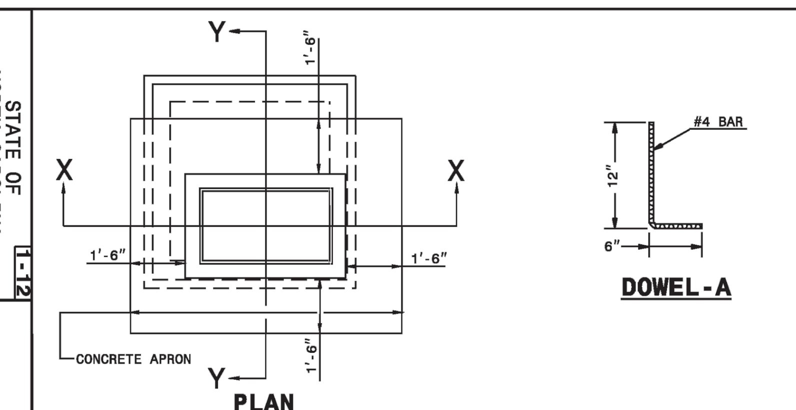

GENERAL NOTES:

USE CLASS "B" CONCRETE THROUGHOUT.

JUMBO BRICK WILL BE PERMITTED. CONCRETE BRICK OR 4" SOLID CONCRETE BLOCKS MAY BE USED IN LIEU OF CLAY BRICKS.

PROVIDE ALL DROP INLETS OVER 3'-6" IN DEPTH WITH STEPS 12" ON CENTER. USE STEPS WHICH COMPLY WITH STD. DRAWING 840.66.

USE #4 BAR DOWELS AT 12" CENTERS.

USE FORMS FOR THE CONSTRUCTION OF THE BOTTOM SLAB.

IF REINFORCED CONCRETE PIPE IS SET IN BOTTOM SLAB OF BOX, ADD TO SLAB AS SHOWN ON STD. NO. 840.00.

CONSTRUCT WITH PIPE CROWNS MATCHING.

MAX. DEPTH OF THIS STRUCTURE FROM TOP OF BOTTOM SLAB TO TOP ELEVATION IS 12 FEET.

USE STANDARD FRAMES AND GRATES 840.22 (SHOWN), 840.24(SHOWN), 840.20, 840.29, AND 840.33.

SEE STANDARD DRAWING 840.25 FOR ATTACHMENT OF FRAMES AND GRATES NOT SHOWN.

CHAMFER ALL EXPOSED CORNERS 1".

DRAWING NOT TO SCALE.

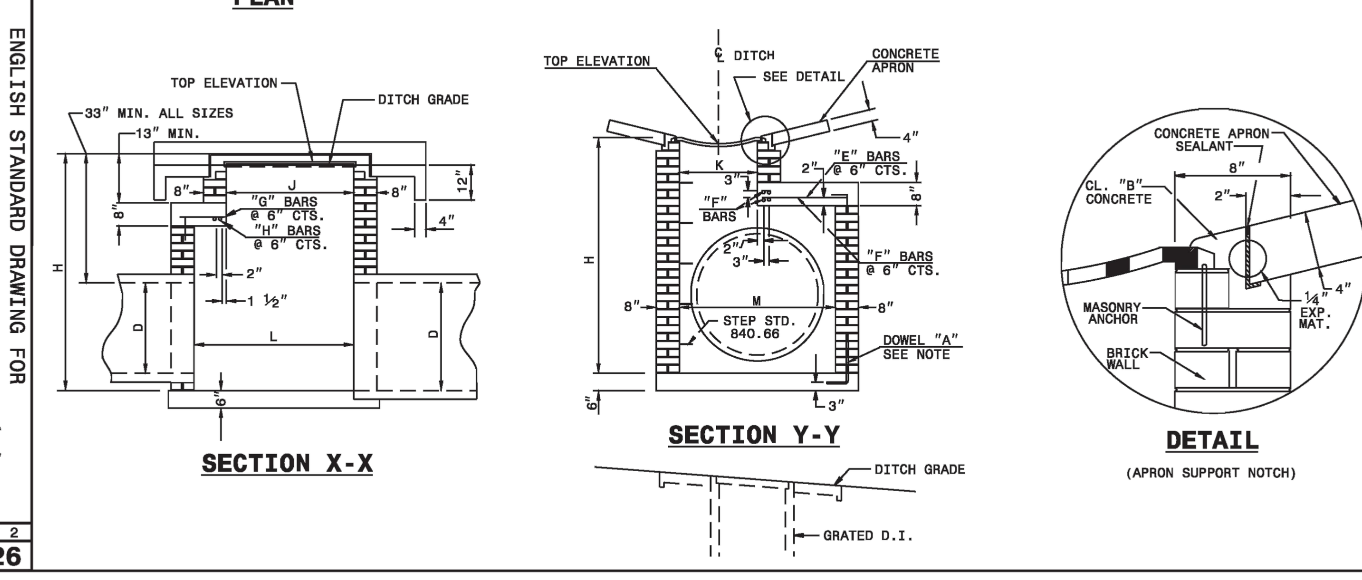

SHEET 1 OF 2
840.26

STATE OF NORTH CAROLINA DEPT. OF TRANSPORTATION DIVISION OF HIGHWAYS RALEIGH, N.C. 1-12 ENGLISH STANDARD DRAWING FOR BRICK GRATED DROP INLET TYPE 'A' 12" THRU 72" PIPE SHEET 1 OF 2 840.26

838.01 — Sheet 3 of 3

STATE OF NORTH CAROLINA
DEPT. OF TRANSPORTATION
DIVISION OF HIGHWAYS
RALEIGH, N.C.
1-12

ENGLISH STANDARD DRAWING FOR
CONCRETE ENDWALL FOR SINGLE AND DOUBLE PIPE CULVERTS
15" THRU 48" PIPE - 90° SKEW

GENERAL NOTES:

CHAMFER ALL CORNERS 1" OR HAVE A RADIUS OF 1".

PLACE 2 #6 "Y" BARS IN THE TOP OF ALL ENDWALL FOR PIPE CULVERTS 42" AND OVER WITH A MINIMUM OF 3" COVER AND A LENGTH OF 6" LESS THAN ENDWALL LENGTH.

CONSTRUCT BOTTOM SLAB WITH FORMS.

DO NOT INTERPRET WALL THICKNESS (T) SHOWN FOR THE THICKNESS ACCEPTABLE, BUT IS USED IN COMPUTING ENDWALL QUANTITIES.

WHEN THE CONTRACTOR ELECTS TO USE A CONSTRUCTION JOINT AT THE BOTTOM OF THE PIPE, PLACE BAR "X" DOWELS IN THE BASE AS SHOWN ON PLANS. SPACE BARS APPROXIMATELY ON 12" CENTERS UNLESS OTHERWISE DIRECTED BY THE ENGINEER.

WHEN THE CONTRACTOR ELECTS TO USE A CONSTRUCTION JOINT AT THE BOTTOM OF THE PIPE AND POUR THE BASE SEPARATELY LEAVE THE POUR ROUGH.

USE CLASS "B" CONCRETE.

SHEET 3 OF 3
838.01

STATE OF NORTH CAROLINA DEPT. OF TRANSPORTATION DIVISION OF HIGHWAYS RALEIGH, N.C. 1-12 ENGLISH STANDARD DRAWING FOR CONCRETE ENDWALL FOR SINGLE AND DOUBLE PIPE CULVERTS 15" THRU 48" PIPE - 90° SKEW SHEET 3 OF 3 838.01

840.20 — Sheet 1 of 1

STATE OF NORTH CAROLINA
DEPT. OF TRANSPORTATION
DIVISION OF HIGHWAYS
RALEIGH, N.C.
1-12

ENGLISH STANDARD DRAWING FOR
FRAMES AND WIDE SLOT FLAT GRATES

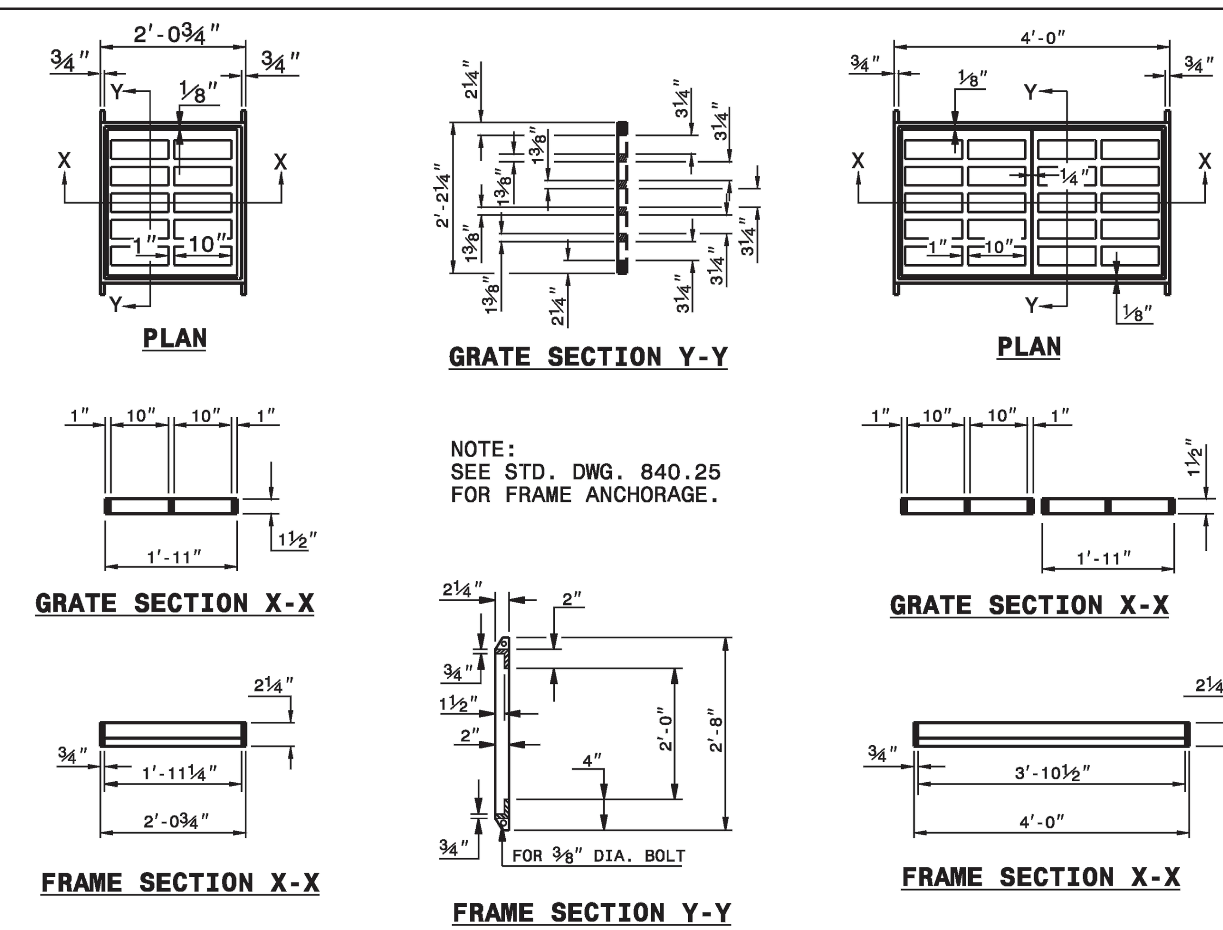

NOTE:
SEE STD. DWG. 840.25 FOR FRAME ANCHORAGE.

SHEET 1 OF 1
840.20

STATE OF NORTH CAROLINA DEPT. OF TRANSPORTATION DIVISION OF HIGHWAYS RALEIGH, N.C. 1-12 ENGLISH STANDARD DRAWING FOR FRAMES AND WIDE SLOT FLAT GRATES SHEET 1 OF 1 840.20

840.26 — Sheet 2 of 2

STATE OF NORTH CAROLINA
DEPT. OF TRANSPORTATION
DIVISION OF HIGHWAYS
RALEIGH, N.C.
1-12

ENGLISH STANDARD DRAWING FOR
BRICK GRATED DROP INLET TYPE 'A'
12" THRU 72" PIPE

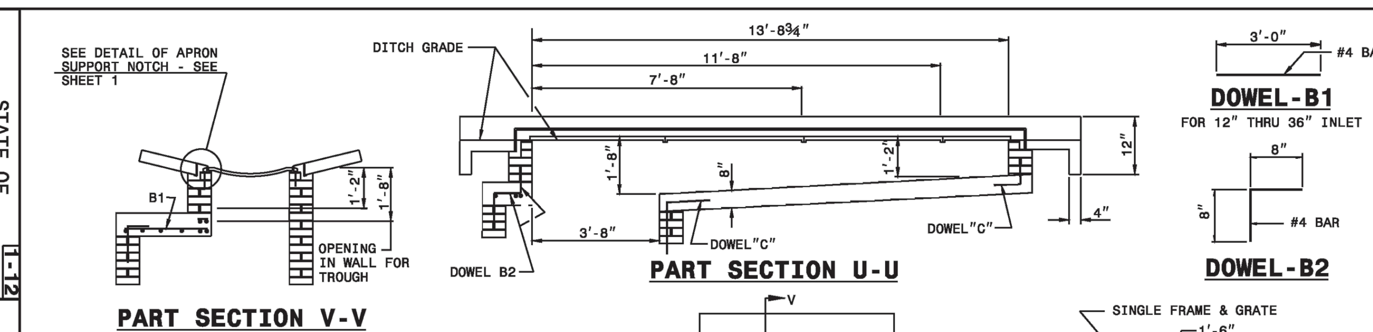

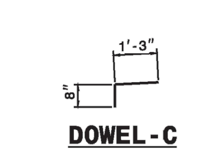

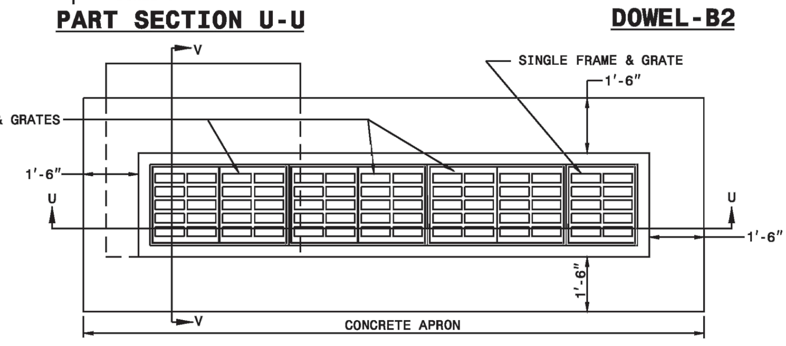

QUANTITY TO BE ADDED FOR EACH 2' INCREMENT INLET OPENING

ADDITIONAL INLETS	2'-0"	4'-0"	6'-0"	8'-0"	10'-0"	12'-0"
CONCRETE CU. YDS.	0.191	0.417	0.665	0.897	1.145	1.380
CONCRETE APRON CU. YDS.	0.065	0.132	0.198	0.263	0.329	0.395

DIMENSIONS AND QUANTITIES FOR BRICK GRATED DROP INLET (BASED ON MIN. HEIGHT, H)

PIPE D	SPAN J	WIDTH K	SPAN L	WIDTH M	HEIGHT H	BARS E NO.	BARS E LENGTH	BARS F NO.	BARS F LENGTH	BARS G NO.	BARS G LENGTH	BARS H NO.	BARS H LENGTH	TOTAL LBS.	CU.YDS. CONC. IN BOX: TOP SLAB	BOTTOM SLAB	APRON	TOTAL	CU.YDS. BRICK MASONRY IN BOX: H TOTAL	H PER FT HT	BRICK AND CONC. TOTAL	DEDUCTIONS FOR ONE PIPE: C.S.	R.C.
12"	3'-8"	2'-0"	3'-8"	2'-0"	3'-9"	—	—	—	—	—	—	—	—	—	—	0.308	0.351	0.659	1.301	0.346 ABOVE MIN H	1.960	0.020	0.032
15"	3'-8"	2'-0"	3'-8"	2'-0"	4'-0"	—	—	—	—	—	—	—	—	—	—	0.308	0.351	0.659	1.407		2.066	0.031	0.047
18"				2'-0"	4'-3"	—	—	—	—	—	—	—	—	—	—	0.308		0.659	1.471		2.130	0.044	0.065
24"				2'-10"	4'-9"	8	1'-3"	6	4'-9"	—	—	—	—	26	0.185	0.386		0.922	1.646	0.346	2.568	0.078	0.113
30"			3'-8"	3'-5"	5'-3"	8	1'-10"	7	4'-9"	—	—	—	—	32	0.301	0.410		1.062	1.936		2.998	0.122	0.170
36"			3'-10"	3'-10"	5'-9"	8	2'-3"	8	4'-10"	4	0'-7"	2	4'-11"	46	0.374	0.494		1.219	2.187		3.406	0.176	0.238
42"			4'-6"	4'-6"	6'-3"	10	2'-11"	9	5'-7"		1'-3"	3	5'-7"	68	0.555	0.630		1.536	2.717		4.253	0.240	0.323
48"			5'-0"	5'-0"	6'-9"	11	3'-5"	10	6'-1"		1'-9"	4	6'-1"	87	0.705	0.743		1.799	3.221	H	5.020	0.313	0.422
54"			5'-6"	5'-6"	7'-3"	12	3'-11"	11	6'-7"		2'-3"	5	6'-7"	108	0.868	0.865		2.084	3.786		5.870	0.396	0.535
60"			6'-2"	6'-2"	7'-9"	13	4'-7"	12	7'-3"		2'-11"	6	7'-3"	135	1.104	1.042		2.497	4.701		7.198	0.489	0.660
66"			6'-9"	6'-9"	8'-3"	14	5'-2"	14	7'-10"		3'-6"	7	7'-10"	168	1.328	1.210		2.889	5.189		8.078	0.591	0.798
72"	3'-8"	2'-0"	7'-4"	7'-4"	8'-9"	15	5'-9"	15	8'-5"	4	4'-1"	8	8'-5"	198	1.569	1.391	0.351	3.311	5.954	0.346	8.905	0.704	0.950

SHEET 2 OF 2
840.26

STATE OF NORTH CAROLINA DEPT. OF TRANSPORTATION DIVISION OF HIGHWAYS RALEIGH, N.C. 1-12 ENGLISH STANDARD DRAWING FOR BRICK GRATED DROP INLET TYPE 'A' 12" THRU 72" PIPE SHEET 2 OF 2 840.26

REVISIONS

REV.NO.	DESCRIPTIONS	DATE
C	ISSUED FOR PERMITTING	01/21/15
B	PRELIMINARY PLAT PENDER CO. REVIEW	10/10/14
A	75% CONSTRUCTION DOCUMENTS TO TLC FOR REVIEW	08/11/14

SEAL
PRELIMINARY- DO NOT USE FOR CONSTRUCTION

SEAL
NORTH CAROLINA PROFESSIONAL ENGINEER SEAL 038577 RICHARD A. CHRISTENSEN 01-21-15

McKIM&CREED
243 North Front Street
Wilmington, North Carolina 28401
Phone: (910)343-1048, Fax: (910)251-8282
NC LIC. No. F-1222
www.mckimcreed.com

Trask Land CO INC
1202 Eastwood Road
Wilmington, NC 28403
(910) 799-8755

BLAKE FARM — EST 1946

BLAKE FARM
TOPSAIL TOWNSHIP
PENDER COUNTY NORTH CAROLINA

ROADWAY DETAILS

DATE:	9 JANUARY 2015
MCE PROJ. #	6525-0001
DRAWN	CDN
DESIGNED	RAC
CHECKED	RAM
PROJ. MGR.	RAM

SCALE
HORIZONTAL: N/A
VERTICAL: N/A

M&C FILE NUMBER CT505
DRAWING NUMBER 67

STATUS: FINAL PLAN NOT FOR CONSTRUCTION
REVISION C

S:\6525\0001\80-Drawings\CT505_065250001.dwg, 1/27/2015 8:38:53 PM, cnursey

STATE OF NORTH CAROLINA
DEPT. OF TRANSPORTATION
DIVISION OF HIGHWAYS
RALEIGH, N.C.

1-12

ENGLISH STANDARD DRAWING FOR

CONCRETE GRATED DROP INLET TYPE 'A'

12" THRU 72" PIPE

SHEET 1 OF 2

840.17

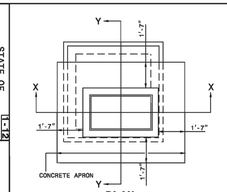

PLAN

DOWEL-A

GENERAL NOTES:

USE CLASS "B" CONCRETE THROUGHOUT.

PROVIDE ALL GRATED DROP INLETS OVER 3'-6" IN DEPTH WITH STEPS 12" ON CENTER. USE STEPS WHICH COMPLY WITH STD. DRAWING 840.66.

OPTIONAL CONSTRUCTION - MONOLITHIC POUR, 2" KEYWAY, OR #4 BAR DOWELS AT 12" CENTERS AS DIRECTED BY THE ENGINEER.

USE FORMS FOR THE CONSTRUCTION OF THE BOTTOM SLAB.

IF REINFORCED CONCRETE PIPE IS SET IN BOTTOM SLAB OF BOX, ADD TO SLAB AS SHOWN ON STD. NO. 840.00.

CONSTRUCT WITH PIPE CROWNS MATCHING.

USE STANDARD FRAMES AND GRATES 840.22 (SHOWN), 840.24(SHOWN), 840.20 (NOT SHOWN) OR 840.29 (NOT SHOWN).

SEE STANDARD DRAWING 840.25 FOR ATTACHMENT OF FRAMES AND GRATES.

CHAMFER ALL EXPOSED CORNERS 1".

DRAWING NOT TO SCALE.

MAX. DEPTH OF THIS STRUCTURE FROM TOP OF BOTTOM SLAB TO TOP ELEVATION IS 12 FEET.

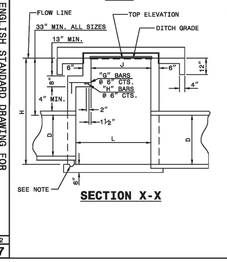

SECTION X-X

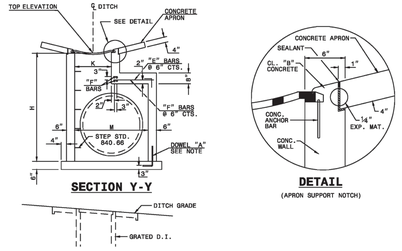

SECTION Y-Y

DETAIL

(APRON SUPPORT NOTCH)

STATE OF NORTH CAROLINA
DEPT. OF TRANSPORTATION
DIVISION OF HIGHWAYS
RALEIGH, N.C.

1-12

ENGLISH STANDARD DRAWING FOR

CONCRETE GRATED DROP INLET TYPE 'A'

12" THRU 72" PIPE

SHEET 1 OF 2

840.17

STATE OF NORTH CAROLINA
DEPT. OF TRANSPORTATION
DIVISION OF HIGHWAYS
RALEIGH, N.C.

1-12

ENGLISH STANDARD DRAWING FOR

CONCRETE GRATED DROP INLET TYPE 'A'

12" THRU 72" PIPE

SHEET 2 OF 2

840.17

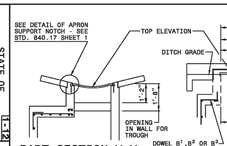

PART SECTION V-V

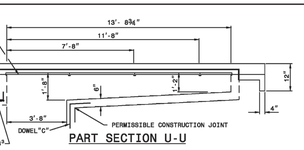

PART SECTION U-U

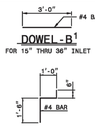

DOWEL-B1
FOR 15" THRU 36" INLET

DOWEL-B2
FOR 42" INLET

DOWEL-B3

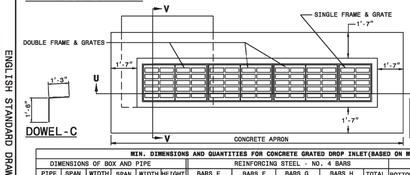

DOWEL-C

QUANTITY TO BE ADDED FOR EACH 2' INCREMENT INLET OPENING						
ADDITIONAL INLETS	2'-0"	4'-0"	6'-0"	8'-0"	10'-0"	12'-0"
CONCRETE CU. YDS.	0.191	0.417	0.665	0.897	1.146	1.380
CONCRETE APRON CU. YDS.	0.074	0.148	0.222	0.296	0.370	0.444

MIN. DIMENSIONS AND QUANTITIES FOR CONCRETE GRATED DROP INLET(BASED ON MIN. HEIGHT, H)

DIMENSIONS OF BOX AND PIPE						REINFORCING STEEL - NO. 4 BARS								CU YDS CONC. IN BOX					DEDUCTIONS FOR ONE PIPE	
PIPE	SPAN	WIDTH	SPAN	WIDTH	HEIGHT	BARS E		BARS F		BARS G		BARS H		TOTAL LBS.	BOTTOM SLAB	H TOTAL	H PER FT HT	APRON	TOTAL	C.S.	R.C.
D	J	K	L	M	H	NO.	LENGTH	NO.	LENGTH	NO.	LENGTH	NO.	LENGTH								
12"	3'-8"	2'-0"	3'-8"	2'-0"	3'-8"	—	—	—	—	—	—	—	—	—	0.362	0.926	0.247	0.395	1.683	0.015	0.024
15"	3'-8"	2'-0"	3'-8"	2'-0"	4'-0"	—	—	—	—	—	—	—	—	—	0.362	0.988	0.247	0.395	1.745	0.023	0.036
18"				2'-0"	4'-3"	—	—	—	—	—	—	—	—	—	0.362	1.050	0.247		1.807	0.033	0.049
24"				2'-10"	4'-9"	8	1'-5"	6	4'-9"	—	—	—	—	27	0.444	1.362	0.278		2.201	0.059	0.085
30"			3'-8"	3'-6"	5'-3"	8	2'-0"	7	4'-9"	—	—	—	—	33	0.502	1.644	0.288		2.541	0.092	0.127
36"			4'-0"	4'-0"	5'-9"	8	2'-5"	8	4'-11"	4	0'-9"	2	4'-11"	47	0.560	1.931	0.321		2.920	0.132	0.178
42"			4'-10"	4'-10"	6'-3"	10	3'-1"	9	5'-7"		1'-5"	3	5'-7"	67	0.704	2.500	0.370		3.677	0.180	0.243
48"			5'-4"	5'-4"	6'-9"	11	3'-7"	10	6'-1"		1'-11"	4	6'-1"	87	0.823	3.013	0.407		4.315	0.235	0.317
54"			6'-0"	6'-0"	7'-3"	12	4'-1"	11	6'-7"		2'-5"	5	6'-7"	107	0.951	3.589	0.444		5.072	0.297	0.401
60"			6'-6"	6'-6"	7'-9"	13	4'-9"	12	7'-3"		3'-1"	6	7'-3"	135	1.311	4.539	0.494		6.170	0.387	0.495
66"			7'-2"	7'-2"	8'-3"	14	5'-4"	14	7'-10"		3'-7"	7	7'-10"	168	1.136	5.061	0.537		6.901	0.444	0.599
72"	3'-8"	2'-0"	7'-8"	7'-8"	8'-9"	15	5'-11"	15	8'-5"	4	4'-3"	8	8'-5"	199	1.500	5.860	0.580	0.395	7.868	0.528	0.713

STATE OF NORTH CAROLINA
DEPT. OF TRANSPORTATION
DIVISION OF HIGHWAYS
RALEIGH, N.C.

1-12

ENGLISH STANDARD DRAWING FOR

CONCRETE GRATED DROP INLET TYPE 'A'

12" THRU 72" PIPE

SHEET 2 OF 2

840.17

STATE OF NORTH CAROLINA
DEPT. OF TRANSPORTATION
DIVISION OF HIGHWAYS
RALEIGH, N.C.

1-12

ENGLISH STANDARD DRAWING FOR

CONCRETE GRATED DROP INLET TYPE 'B'

12" THRU 36" PIPE

SHEET 1 OF 1

840.18

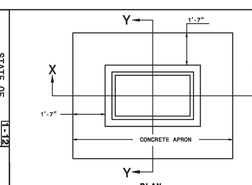

PLAN

GENERAL NOTES:

USE CLASS "B" CONCRETE THROUGHOUT.

PROVIDE ALL GRATED DROP INLETS OVER 3'-6" IN DEPTH WITH STEPS 12" ON CENTER. USE STEPS WHICH COMPLY WITH STD. DRAWING 840.66.

OPTIONAL CONSTRUCTION - MONOLITHIC POUR, 2" KEYWAY, OR #4 BAR DOWELS AT 12" CENTERS AS DIRECTED BY THE ENGINEER.

USE FORMS FOR THE CONSTRUCTION OF THE BOTTOM SLAB.

IF REINFORCED CONCRETE PIPE IS SET IN BOTTOM SLAB OF BOX, ADD TO SLAB AS SHOWN ON STD. NO. 840.00.

CONSTRUCT WITH PIPE CROWNS MATCHING.

MAX. DEPTH OF THIS STRUCTURE FROM TOP OF BOTTOM SLAB TO TOP ELEVATION IS 12 FEET.

USE STANDARD FRAMES AND GRATES 840.22 (SHOWN), 840.24(SHOWN), 840.20, 840.29, AND 840.33.

SEE STANDARD DRAWING 840.25 FOR ATTACHMENT OF FRAMES AND GRATES NOT SHOWN.

CHAMFER ALL EXPOSED CORNERS 1".

DRAWING NOT TO SCALE.

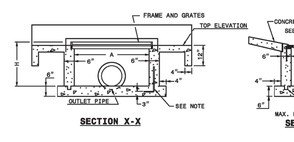

SECTION X-X

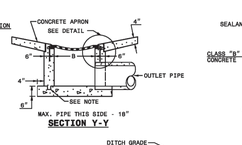

SECTION Y-Y

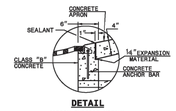

DETAIL

(APRON SUPPORT NOTCH)

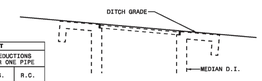

DOWEL "A"

MINIMUM DIMENSIONS AND QUANTITIES FOR CONCRETE GRATED DROP INLET

PIPE	SPAN	WIDTH	HEIGHT		CUBIC YARDS OF CONCRETE IN BOX			DEDUCTIONS FOR ONE PIPE	
D	A	B	H	BOTTOM SLAB	H PER FT. HT.	H MIN. TOTAL	TOTAL	C.S.	R.C.
12"	3'-8"	2'-0"	2'-8"	0.362	0.247	0.597	0.958	0.020	0.032
15"	3'-8"	2'-0"	2'-9"	0.362	0.247	0.659	1.021	0.023	0.036
18"	3'-8"	2'-0"	3'-0"	0.362	0.247	0.720	1.082	0.033	0.049
24"	3'-8"	2'-0"	3'-8"	0.362	0.247	0.865	1.227	0.059	0.085
30"	3'-8"	2'-0"	4'-0"	0.362	0.247	0.988	1.350	0.092	0.127
36"	3'-8"	2'-0"	4'-8"	0.362	0.247	1.112	1.474	0.132	0.178

STATE OF NORTH CAROLINA
DEPT. OF TRANSPORTATION
DIVISION OF HIGHWAYS
RALEIGH, N.C.

1-12

ENGLISH STANDARD DRAWING FOR

CONCRETE GRATED DROP INLET TYPE 'B'

12" THRU 36" PIPE

SHEET 1 OF 1

840.18

REV.NO.	DESCRIPTIONS	DATE
C	ISSUED FOR PERMITTING	01/21/15
B	PRELIMINARY PLAT PENDER CO. REVIEW	10/10/14
A	75% CONSTRUCTION DOCUMENTS TO TLC FOR REVIEW	08/11/14

REVISIONS

PRELIMINARY- DO NOT USE FOR CONSTRUCTION

SEAL

NORTH CAROLINA PROFESSIONAL SEAL 038577 ENGINEER RICHARD A. MASSEN

01-21-15

McKIM&CREED
243 North Front Street
Wilmington, North Carolina 28401
Phone: (910)343-1048, Fax: (910)251-8282

NC LIC. No. F-1222
www.mckimcreed.com

Trask Land CO INC
1202 Eastwood Road
Wilmington, NC 28403
(910) 799-8755

BLAKE FARM — EST 1946 —

BLAKE FARM
TOPSAIL TOWNSHIP
PENDER COUNTY NORTH CAROLINA

ROADWAY DETAILS

DATE:	9 JANUARY 2015
MCE PROJ. #	6525-0001
DRAWN	CDN
DESIGNED	RAC
CHECKED	RAM
PROJ. MGR.	RAM

SCALE
HORIZONTAL: N/A
VERTICAL: N/A

M&C FILE NUMBER CT506

DRAWING NUMBER 68

STATUS: FINAL PLAN NOT FOR CONSTRUCTION

REVISION C

S:\6525\0001\8D-Drawings\CT506_06525D001.dwg, 12/7/2015 8:39:18 PM, cnursey