Site Development For

SLOOP POINT MINI STORAGE

OCTOBER, 2017

HAMPSTEAD, NORTH CAROLINA

RECEIVED
OCT 20 2017
PENDER PLANNING DEPT.

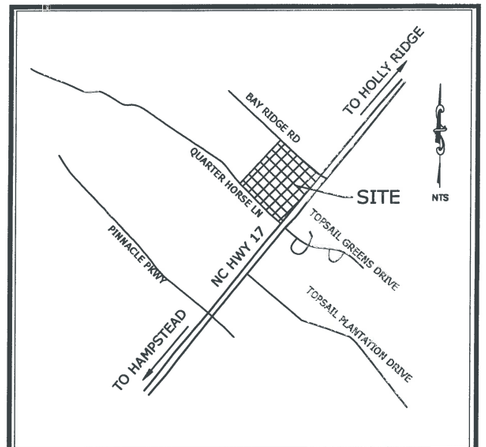

VICINITY MAP

LEGEND

DESCRIPTION	EXISTING	PROPOSED
PROPERTY BOUNDARY		
EASEMENT		
STREAM		
STRUCTURE		
MINOR CONTOURS	8	8
MAJOR CONTOURS	10	10
GAS LINE	G	G
OVERHEAD POWER	OHP	
WATER LINE	W	W
SANITARY SEWER LINE	SS	SS
SANITARY SEWER MANHOLE	S	S
STORM DRAINAGE PIPE		
STORM DRAINAGE STRUCTURE		
TREE	11" OAK	
CONCRETE		
SILT FENCE		SF
TREE PROTECTION FENCE		TP
FIRE HYDRANT ASSEMBLY		
DISTURBED LIMITS LINE		DL

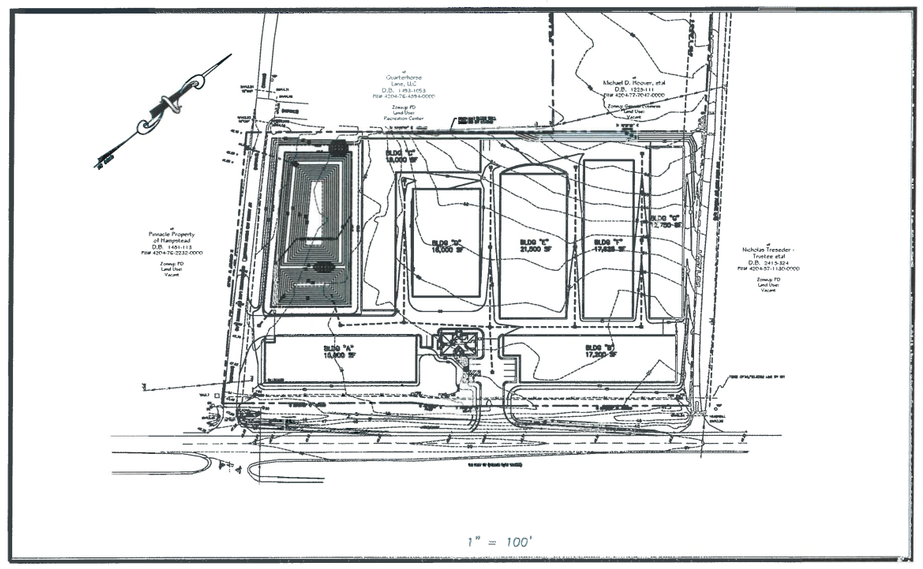

INDEX OF SHEETS

SHT C-0	COVER SHEET
SHT C-1	GENERAL NOTES
SHT C-2	EXISTING CONDITIONS
SHT C-2.1	DEMOLITION PLAN
SHT C-3	SITE LAYOUT
SHT C-4.0	GRADING & DRAINAGE PLAN
SHT C-4.1	EROSION CONTROL PLAN
SHT C-4.2	DRAINAGE AREA PLAN
SHT C-5	UTILITY PLAN
SHT C-6.0-6.1	MISCELLANEOUS DETAILS
SHT C-6.2	POND DETAILS
SHT L-1 & 2	LANDSCAPE PLAN

SITE DATA TABLE

GENERAL NOTES:

1. PENDER COUNTY PARCEL NOS.:
   PIN# 4204-76-8504-0000
   PIN# 4204-86-1659-0000
2. TOTAL AREA: 280,340 SF ~ 6.44 AC.±
3. EXISTING ZONING: GENERAL BUSINESS (CZMA 519-2017)
4. NONE OF THIS PROPERTY NOT WITHIN ZONE X & ZONE AE PER FEMA FLOOD INSURANCE RATE MAP #37200420400J, EFFECTIVE DATE 2/16/2007.
5. CAMA LAND CLASSIFICATION: URBAN

DEVELOPMENT DATA:

Total Tract Area = 280,340 SF = 6.44 ac

Total Development Area = 6.441 ac

Totals Disturbed Area = 6.71 ac

Max. Bldg. Hgts. - 10' for Mini Storage Buildings
Max. Bldg. Hgts. - 32' for Office Building

Setbacks:	REQUIRED	PROVIDED
Min. Front Yard:	25'	30.1'
Min. Side Yard:	10'	17.1'
Min. Corner Yard:	12'	n/a
Min. Rear Yard:	10'	10'

IMPERVIOUS SURFACES - PROPOSED BUA

MINI STORAGE BLDG -	119,675 S.F.
OFFICE BLDG -	1,720 S.F.
PAVEMENT -	59,357 S.F.
SIDEWALK -	530 S.F.
TOTAL -	181,282 S.F. (64.7%)

PARKING:

MIN. REQ'D @ 1 SP/100 UNITS
REQ'D: 655 UNITS - 7 SPACES REQUIRED
PROVIDED: 9 SPACES W/ 1 HC

ALL SECURITY AND DECORATIVE LIGHTING IS WALL-MOUNTED AND SHALL BE LOCATED SO AS NOT TO SHINE OR REFLECT DIRECTLY ONTO ANY ADJACENT RESIDENTIAL PROPERTY.

SOLID WASTE DISPOSAL IS PROVIDED ONLY FOR THE FACILITY MANAGEMENT. CONTAINERS ARE KEPT ENCLOSED IN A STORAGE UNIT AND PICKUP IS CONTRACTED THROUGH A PRIVATE HAULER.

NOTE:
ALL DESIGN AND CONSTRUCTION SHALL BE IN CONFORMANCE WITH PENDER COUNTY & THE STATE OF NORTH CAROLINA

OWNER

AJ MCGIRT LAND MANAGEMENT, LLC
P.O. BOX 15148
WILMINGTON, NC 28408
TEL: 910.612-6762

PORT CITY CONSULTING ENGINEERS, PLLC
6216 STONEBRIDGE ROAD
WILMINGTON, NC 28409
910-599-1744 LICENSE No. P-1032

NORTH CAROLINA PROFESSIONAL SEAL 019742 ENGINEER MARK N. HARGROVE

PRELIMINARY - DO NOT USE FOR CONSTRUCTION

COORDINATION NOTES

1. THE CONTRACTOR IS REQUIRED TO OBTAIN ANY/ALL PERMITS REQUIRED FOR CONSTRUCTION OF THESE PLANS.
2. ALL WORK IS TO BE IN ACCORDANCE WITH PENDER COUNTY, PLURIS, LLC AND THE STATE OF NORTH CAROLINA.
3. THE CONTRACTOR IS TO ESTABLISH AND CHECK ALL HORIZONTAL AND VERTICAL CONTROLS TO BE USED WITH THE PROJECT. IN ADDITION, THE CONTRACTOR IS TO COMPUTE THE LAYOUT OF THE ENTIRE SITE PLAN IN ADVANCE OF BEGINNING ANY WORK ASSOCIATED WITH THE SUBJECT PLANS. CONTRACTOR SHALL EMPLOY A PROFESSIONAL SURVEYOR TO PERFORM SITE IMPROVEMENT STAKEOUT(S).
4. ANYTIME WORK IS PERFORMED OFF-SITE OR WITHIN AN EXISTING EASEMENT, THE CONTRACTOR IS TO NOTIFY THE HOLDER OF SAID EASEMENT AS TO THE NATURE OF PROPOSED WORK, AND TO FOLLOW ANY GUIDELINES OR STANDARDS WHICH ARE ASSOCIATED WITH OR REFERENCED IN THE RECORDED EASEMENT.

GENERAL NOTES:

1. EXISTING TOPOGRAPHY, BOUNDARY AND UTILITIES, HAVE BEEN PREPARED BY FIELD SURVEY BY GARY W. KEYES LAND SURVEYING, P.C.
2. REASONABLE CARE HAS BEEN EXERCISED IN SHOWING THE LOCATION OF EXISTING UTILITIES ON THE PLANS. THE EXACT LOCATION OF ALL EXISTING UTILITIES IS NOT KNOWN IN ALL CASES. THE CONTRACTOR SHALL EXPLORE THE AREA AHEAD OF DITCHING OPERATIONS BY OBSERVATIONS, ELECTRONIC DEVICES, HAND DIGGING AND BY PERSONAL CONTACT WITH THE UTILITY COMPANIES. IN ORDER TO LOCATE EXISTING UTILITIES IN ADVANCE OF TRENCHING OPERATIONS SO AS TO ELIMINATE OR MINIMIZE DAMAGE TO EXISTING UTILITIES. THE CONTRACTOR SHALL BE RESPONSIBLE FOR ALL COSTS RESULTING FROM ANY DAMAGE TO THE EXISTING UTILITY LINES INCLUDING LOSS OF UTILITY REVENUES. CONTRACTOR SHALL ARRANGE FOR TEMPORARY SUPPORT OF EXISTING UTILITIES, SUCH AS POLES, CONDUITS, FIBER OPTIC CABLES, TELEPHONE CABLES, WATER LINES, ETC...
3. CONTRACTOR SHALL COMPLY WITH THE LATEST REVISIONS AND INTERPRETATIONS OF THE DEPARTMENT OF LABOR SAFETY AND HEALTH REGULATIONS FOR CONSTRUCTION PROMULGATED UNDER THE OCCUPATIONAL SAFETY AND HEALTH ACT.
4. CONTRACTOR SHALL PLAN AND CONSTRUCT WORK SO AS TO CAUSE MINIMUM INCONVENIENCE TO THE OWNER AND THE PUBLIC. THE CONTRACTOR SHALL PROVIDE, ERECT AND MAINTAIN AT ALL TIMES DURING THE PROGRESS OR TEMPORARY SUSPENSION OF WORK, SUITABLE BARRIERS, FENCES, SIGNS OR OTHER ADEQUATE PROTECTION, INCLUDING FLAGMEN AND WATCHMEN AS NECESSARY TO INSURE THE SAFETY OF THE PUBLIC AS WELL AS THOSE ENGAGED IN THE CONSTRUCTION WORK. CONSTRUCTION SIGNING SHALL BE IN ACCORDANCE WITH THE LATEST EDITION OF "CONSTRUCTION AND MAINTENANCE OPERATIONS SUPPLEMENT TO THE MANUAL ON UNIFORM TRAFFIC CONTROL DEVICES" BY THE DOT.
5. ALL MATERIAL CLEARED OR DEMOLISHED BY THE CONTRACTOR IN ORDER TO CONSTRUCT THE WORK SHALL BECOME THE PROPERTY OF THE CONTRACTOR AND SHALL BE PROPERLY DISPOSED OF OFF-SITE.
6. ALL WORK BY THE CONTRACTOR SHALL BE WARRANTED BY THE CONTRACTOR FOR A PERIOD OF ONE YEAR AFTER THE OWNER ACCEPTS THE WORK.
7. CONTRACTOR SHALL CALL THE NORTH CAROLINA ONE-CALL CENTER AT 1 (800) 632-4949 AND ALLOW THE CENTER TO LOCATE EXISTING UTILITIES BEFORE DIGGING.
8. CONTRACTOR SHALL REMOVE ASPHALT, AGGREGATE BASE COURSE, AND CONCRETE CURB & GUTTER WITHIN LIMITS OF DEMOLITION AS SHOWN ON PLAN.

DEMOLITION NOTES

1. CONTRACTOR TO COORDINATE WITH THE OWNER TO PROPERLY MAINTAIN OR RELOCATE EXISTING SERVICE CONNECTIONS WHEN NECESSARY
2. CONTRACTOR IS TO WALK THE SITE AND BECOME FAMILIAR WITH THE SCOPE OF DEMOLITION REQUIRED. ALL DEMOLITION WORK REQUIRED TO CONSTRUCT NEW SITE IMPROVEMENTS WILL BE PERFORMED BY THE CONTRACTOR AND WILL BE UNCLASSIFIED EXCAVATION.
3. DEMOLITION SHALL INCLUDE BUT IS NOT LIMITED TO THE EXCAVATION, HAULING AND OFFSITE DISPOSAL OF CONCRETE PADS, CONCRETE DITCHES, FOUNDATIONS, SLABS, STEPS, AND STRUCTURES; ABANDONED UTILITIES, BUILDINGS, PAVEMENTS AND ALL MATERIALS CLEARED AND STRIPPED TO THE EXTENT NECESSARY AS DIRECTED BY THE SOILS ENGINEER FOR THE INSTALLATION OF THE NEW IMPROVEMENTS AND WITHIN THE LIMITS OF CLEARING AND GRADING AND AS SHOWN ON THESE PLANS.
4. THE CONTRACTOR SHALL PROTECT ALL ADJACENT PROPERTY, STRUCTURES AND UTILITIES ON THE PROPERTY NOT TO BE DEMOLISHED. DAMAGE TO PROPERTIES OF OTHERS DUE TO THE CONTRACTOR'S ACTIVITIES SHALL BE REPLACED IN KIND BY THE CONTRACTOR AT NO COST TO OWNER.
5. ELECTRIC, TELEPHONE, SANITARY SEWER, WATER AND STORM SEWER UTILITIES THAT SERVICE OFF-SITE PROPERTIES SHALL BE MAINTAINED DURING THE CONSTRUCTION PROCESS BY THE CONTRACTOR.
6. EXISTING UTILITIES NOT INTENDED FOR DEMOLITION SHALL BE MAINTAINED, PROTECTED AND UNDISTURBED DURING DEMOLITION
7. ALL EXISTING IMPROVEMENTS INDICATED OR REQUIRED TO BE DEMOLISHED SHALL INCLUDE REMOVAL FROM THE PROPERTY AND PROPER DISPOSAL.
8. CONTRACTOR SHALL COORDINATE RELOCATION OF ALL EXISTING OVER HEAD AND UNDERGROUND UTILITIES INCLUDING CABLE, GAS, TELEPHONE AND ELECTRIC AND ANY OTHER UTILITIES THROUGH THE SITE WITH THE RESPECTIVE COMPANIES.
9. PROVIDE SMOOTH SAW CUT OF EXISTING PAVEMENTS, CURBS AND GUTTERS AND SIDEWALKS TO BE DEMOLISHED.
10. ALL DEMOLITION WORK SHALL BE DONE IN STRICT ACCORDANCE WITH LOCAL, STATE AND FEDERAL REGULATIONS AS WELL AS OSHA REGULATIONS.
11. INFORMATION CONCERNING UNDERGROUND UTILITIES WAS OBTAINED FROM AVAILABLE RECORDS, BUT THE THE CONTRACTOR MUST DETERMINE THE EXACT LOCATION AND ELEVATIONS OF THE MAINS BY DIGGING TEST PITS BY HAND.

EROSION AND SEDIMENT CONTROL NOTES

GENERAL NOTES:

1. CLEAR AND REMOVE FROM SITE ALL TREES, ROOTS, ROOT MAT, ETC. FROM THE AREA WITHIN DESIGNATED CLEARING LIMITS.
2. PLANT GRASS OVER ALL GRADED AREAS AS SHOWN IN THE TABLE ON THIS SHEET OF CEASE OF ANY GRADING ACTIVITY.
3. CONTRACTOR SHALL BE RESPONSIBLE FOR CLEANING AND RESTORING TO PRE-CONSTRUCTION CONDITIONS ANY AREAS OUTSIDE THE PROJECT LIMITS THAT MAY INADVERTENTLY BE DAMAGED DUE TO THE FAILURE OF THE EROSION MEASURES
4. DURING GRADING AND AFTER GRADING HAS BEEN COMPLETED, CONTRACTOR SHALL CONTINUE TO MAINTAIN PERMANENT AND TEMPORARY EROSION CONTROL MEASURES UNTIL FINAL INSPECTION AND APPROVAL BY NEW HANOVER COUNTY.
5. WATER, FERTILIZE, MOW AND MAINTAIN SPRIGGED, SODDED AND PLANTED AREAS UNTIL FINAL APPROVAL BY NEW HANOVER COUNTY.
6. ANY BORROW MATERIAL BROUGHT ONTO SITE MUST BE FROM A LEGALLY OPERATED MINE OR OTHER APPROVED SOURCE.
7. ANY EXCESS MATERIAL REMOVED FROM SITE MUST BE HAULED TO A LEGALLY OPERATED MINE OR OTHER APPROVED SOURCE.

MAINTENANCE PLAN

1. ALL EROSION AND SEDIMENT CONTROL PRACTICES WILL BE CHECKED FOR STABILITY AND OPERATION FOLLOWING EVERY RUNOFF-PRODUCING RAINFALL BUT IN NO CASE LESS THAN ONCE EVERY WEEK. ANY NEEDED REPAIRS WILL BE MADE IMMEDIATELY TO MAINTAIN ALL PRACTICES AS DESIGNED.
2. ALL CONSTRUCTION ENTRANCES WILL BE PERIODICALLY TOP DRESSED WITH AN ADDITIONAL 2 INCHES OF #4 STONE TO MAINTAIN PROPER DEPTH. ANY SEDIMENT THAT IS TRACKED INTO THE STREET WILL BE IMMEDIATELY REMOVED.
3. SEDIMENT WILL BE REMOVED BEHIND THE SEDIMENT FENCE WHEN IT BECOMES 0.5 FEET DEEP AT THE FENCE. THE SEDIMENT FENCE WILL BE REPAIRED AS NECESSARY TO MAINTAIN A BARRIER. SILT FENCE STAKES WILL BE SPACED 6 FEET APART UNLESS A WIRE BACKING IS USED WITH 8 FOOT STAKE SPACING.
4. INSPECT INLET PROTECTION AT LEAST WEEKLY AND AFTER EACH SIGNIFICANT (1/2 INCH OR GREATER) RAINFALL EVENT. CLEAR THE MESH WIRE OF ANY DEBRIS OR OTHER OBJECTS TO PROVIDE ADEQUATE FLOW FOR SUBSEQUENT RAINS. TAKE CARE NOT TO DAMAGE OR UNDERCUT THE WIRE MESH DURING SEDIMENT REMOVAL. REPLACE STONE AS NEEDED.

   INSPECT SILT SACKS AT LEAST WEEKLY AND AFTER EACH SIGNIFICANT (1/2 INCH OR GREATER) RAINFALL EVENT. CLEAR THE SILT SACK OF ANY DEBRIS OR OTHER OBJECTS TO PROVIDE ADEQUATE FLOW FOR SUBSEQUENT RAINS. TAKE CARE NOT TO DAMAGE THE SILT SACK DURING SEDIMENT REMOVAL. REPLACE AS NEEDED.
5. ALL SEEDED AREAS WILL BE FERTILIZED, RESEEDED AS NECESSARY, AND MULCHED ACCORDING TO SPECIFICATIONS IN THE VEGETATIVE PLAN TO MAINTAIN A VIGOROUS, DENSE VEGETATIVE COVER.
6. INSPECT SKIMMER SEDIMENT BASINS AS LEAST WEEKLY AND AFTER EACH SIGNIFICANT (ONE-HALF INCH OR GREATER) RAINFALL EVENT AND REPAIR IMMEDIATELY. REMOVE SEDIMENT AND RESTORE THE BASIN TO ITS ORIGINAL DIMENSIONS WHEN SEDIMENT ACCUMULATES TO ONE-HALF THE HEIGHT OF THE FIRST BAFFLE. PULL THE SKIMMER TO ONE SIDE SO THAT THE SEDIMENT UNDERNEATH IT CAN BE EXCAVATED. EXCAVATE THE SEDIMENT FROM THE ENTIRE BASIN, NOT JUST AROUND THE SKIMMER OR THE FIRST CELL. MAKE SURE VEGETATION GROWING IN THE BOTTOM OF THE BASIN DOES NOT HOLD DOWN THE SKIMMER. REPAIR THE BAFFLES IF THEY ARE DAMAGED. RE-ANCHOR THE BAFFLES IF WATER IS FLOWING UNDERNEATH OR AROUND THEM.

   IF THE SKIMMER IS CLOGGED WITH TRASH AND THERE IS WATER IN THE BASIN, USUALLY JERKING ON THE ROPE WILL MAKE THE SKIMMER BOB UP AND DOWN AND DISLODGE THE DEBRIS AND RESTORE FLOW. IF THIS DOES NOT WORK, PULL THE SKIMMER OVER TO THE SIDE OF THE BASIN AND REMOVE THE DEBRIS. ALSO CHECK THE ORIFICE INSIDE THE SKIMMER TO SEE IF IT IS CLOGGED; IF SO REMOVE THE DEBRIS.

   IF THE SKIMMER ARM OR BARREL PIPE IS CLOGGED, THE ORIFICE CAN BE REMOVED AND THE OBSTRUCTION CLEARED WITH A PLUMBER'S SNAKE OR BY FLUSHING WITH WATER. BE SURE AND REPLACE THE ORIFICE BEFORE REPOSITIONING THE SKIMMER. CHECK FABRIC LINED SPILLWAY FOR DAMAGE AND MAKE ANY REPAIRS WITH FABRIC THAT SPANS THE FULL WIDTH OF THE SPILLWAY. CHECK THE EMBANKMENT, SPILLWAYS AND OUTLET FOR EROSION DAMAGE, AND INSPECT THE EMBANKMENT FOR PIPING AND SETTLEMENT. MAKE ALL NECESSARY REPAIRS IMMEDIATELY. REMOVE ALL TRASH AND THERE DEBRIS FROM THE SKIMMER AND POOL AREAS. FREEZING WEATHER CAN RESULT IN ICE FORMING IN THE BASIN. SOME SPECIAL PRECAUTIONS SHOULD BE TAKEN IN THE WINTER TO PREVENT THE SKIMMER FROM PLUGGING WITH ICE.
7. INSPECT EXCELSIOR MATTING AT LEAST WEEKLY AND AFTER EACH SIGNIFICANT (1/2 INCH OR GREATER) RAINFALL EVENT REPAIR IMMEDIATELY. GOOD CONTACT WITH THE GROUND MUST BE MAINTAINED, AND EROSION MUST NOT OCCUR BENEATH THE MATTING. ANY AREAS OF THE MATTING THAT ARE DAMAGED OR NOT IN CLOSE CONTACT WITH THE GROUND SHALL BE REPAIRED AND STAPLED. IF EROSION OCCURS DUE TO POORLY CONTROLLED DRAINAGE, THE PROBLEM SHALL BE FIXED AND THE ERODED AREA PROTECTED. MONITOR AND REPAIR THE MATTING AS NECESSARY UNTIL GROUND COVER IS ESTABLISHED.
8. DURING THE ESTABLISHMENT PERIOD OF GRASSED SWALES, CHECK GRASS-LINED CHANNELS AFTER EVERY RAINFALL. AFTER GRASS IS ESTABLISHED, PERIODICALLY CHECK THE CHANNEL; CHECK IT AFTER EVERY HEAVY RAINFALL. IMMEDIATELY MAKE REPAIRS. IT IS PARTICULARLY IMPORTANT TO CHECK THE CHANNEL OUTLET AND ALL ROAD CROSSINGS FOR BANK STABILITY AND EVIDENCE OF PIPING OR SCOUR HOLES. REMOVE ALL SIGNIFICANT SEDIMENT ACCUMULATIONS TO MAINTAIN THE DESIGNED CARRYING CAPACITY. KEEP THE GRASS IN A HEALTHY, VIGOROUS CONDITION AT ALL TIMES, SINCE IT IS THE PRIMARY EROSION PROTECTION FOR THE CHANNEL.
9. ALL SEEDED AREAS WILL BE FERTILIZED, RESEEDED AS NECESSARY, AND MULCHED ACCORDING TO SPECIFICATIONS IN THE VEGETATIVE PLAN TO MAINTAIN A VIGOROUS, DENSE VEGETATIVE COVER. ALL SLOPES WILL BE STABILIZED WITHIN 21 CALENDAR DAYS. ALL OTHER AREAS WILL BE STABILIZED WITHIN 15 WORKING DAYS.

PERMANENT SEEDING SCHEDULE

Seeding Mixture

SPECIES	RATE (LB/ACRE)
CAROLINA COASTAL SEED MIX (BLEND)	200

Seeding Dates

MARCH - JUNE

Soil Amendments

APPLY LIME AND FERTILIZER ACCORDING TO SOIL TESTS, OR APPLY 300 LB/ACRE 10-10-10 FERTILIZER.

CHECK WITH OWNER PRIOR TO APPLYING. ALL CHEMICALS MUST BE PREAPPROVED BY GE.

Mulch

DO NOT MULCH.

Maintenance By Owner

FERTILIZE VERY SPARINGLY LB/ACRE NITROGEN IN SPRING WITH NO PHOSPHORUS. CENTIPEDE GRASS CANNOT TOLERATE HIGH PH OR EXCESS FERTILIZER.

TEMPORARY SEEDING-LATE WINTER/EARLY SPRING

Seeding Mixture

WINTER AND EARLY SPRING

SPECIES
Rye (GRAIN)
ANNUAL LESPEDEZA (KOBE IN PIEDMONT AND COASTAL PLAIN, KOREAN IN MOUNTAINS)

OMIT ANNUAL LESPEDEZA WHEN DURATION OF TEMPORARY COVER IS NOT TO EXTEND BEYOND JUNE.

SUMMER

SPECIES	RATE (LB/ACRE)
GERMAN MILLET	120 50

FALL

SPECIES	RATE (LB/ACRE)
RYE (GRAIN)	40

Seeding dates

COASTAL PLAIN - DEC.1-APR. 15 - LATE WINTER AND EARLY SPRING
APRIL 15 - AUG. 15 - SUMMER
AUG. 15 - DEC. 30 - FALL

Soil amendments

FOLLOW RECOMMENDATIONS OF SOIL TESTS OR APPLY 2,000 LB/ACRE GROUND AGRICULTURAL LIMESTONE AND 750 LB/ACRE 10-10-10 FERTILIZER.

Mulch

APPLY 4,000 LB/ACRE STRAW. ANCHOR STRAW BY TACKING WITH ASPHALT, NETTING OR A MULCH ANCHORING TOOL. A DISK WITH BLADES SET NEARLY STRAIGHT CAN BE USED AS A MULCH ANCHORING TOOL.

Maintenance

REFERTILIZE IF GROWTH IS NOT FULLY ADEQUATE. RESEED, REFERTILIZE AND MULCH IMMEDIATELY FOLLOWING EROSION OR OTHER DAMAGE.

GENERAL GRADING NOTES

1. REASONABLE CARE HAS BEEN EXERCISED IN SHOWING THE LOCATION OF EXISTING UTILITIES ON THE PLANS. THE EXACT LOCATION OF SUCH UTILITIES IS NOT KNOWN IN ALL CASES. THE CONTRACTOR SHALL EXPLORE THE AREA AHEAD OF THE DITCHING OPERATION BY OBSERVATIONS, ELECTRONIC DEVICES, HAND DIGGING AND BY PERSONAL CONTACT WITH THE UTILITY COMPANIES IN ORDER TO LOCATE EXISTING UTILITIES IN ADVANCE OF THE TRENCHING OPERATIONS SO AS TO AVOID AND PREVENT DAMAGE TO THE EXISTING UTILITIES. CONTRACTOR SHALL BE RESPONSIBLE FOR ALL COST RESULTING FROM ANY DAMAGE TO THE EXISTING UTILITY LINES INCLUDING BUT NOT LIMITED TO REPAIRS AND LOSS SERVICE REVENUE. CONTRACTOR SHALL ARRANGE FOR TEMPORARY SUPPORT OF EXISTING UTILITIES, SUCH AS POLES, CONDUITS, FIBER OPTIC CABLES, TELEPHONE CABLES, WATER LINES, ETC...
2. CONTRACTOR SHALL COMPLY WITH THE LATEST REVISIONS AND INTERPRETATIONS OF THE DEPARTMENT OF LABOR SAFETY AND HEALTH REGULATIONS FOR CONSTRUCTION PROMULGATED UNDER THE OCCUPATIONAL SAFETY AND HEALTH ACT.
3. CONTRACTOR SHALL PLAN AND CONSTRUCT WORK SO AS TO CAUSE MINIMUM INCONVENIENCE TO THE OWNER AND THE PUBLIC. THE CONTRACTOR SHALL PROVIDE, ERECT AND MAINTAIN AT ALL TIMES DURING THE PROGRESS OR TEMPORARY SUSPENSION OF WORK, SUITABLE BARRIERS, FENCES, SIGNS OR OTHER ADEQUATE PROTECTION, INCLUDING FLAG MEN AND WATCHMEN AS NECESSARY TO INSURE THE SAFETY OF THE PUBLIC AS WELL AS THOSE ENGAGED IN THE CONSTRUCTION WORK. CONSTRUCTION SIGNING SHALL BE IN ACCORDANCE WITH THE LATEST EDITION OF "CONSTRUCTION AND MAINTENANCE OPERATIONS SUPPLEMENT TO THE MANUAL ON UNIFORM TRAFFIC CONTROL DEVICES" BY THE NCDOT.
4. ALL MATERIAL CLEARED AND GRUBBED BY THE CONTRACTOR IN ORDER TO CONSTRUCT THE WORK, SUCH AS TREES, VEGETATION, FENCING, ETC... SHALL BECOME THE PROPERTY OF THE CONTRACTOR AND SHALL BE PROPERLY DISPOSED OF OFF-SITE OR BURNED IF PROPER PERMITS ARE RECEIVED.

SITE NOTES

1. ANY DISCREPANCY IN THIS PLAN AND ACTUAL FIELD CONDITIONS SHALL BE REPORTED TO THE OWNER PRIOR TO START OF CONSTRUCTION. GENERAL CONTRACTOR SHALL BE RESPONSIBLE FOR VERIFICATION OF ALL SETBACKS, EASEMENTS AND DIMENSIONS SHOWN HEREON BEFORE BEGINNING CONSTRUCTION.
2. THE GENERAL CONTRACTOR SHALL CONTACT ALL OWNERS OF EASEMENTS, UTILITIES AND R.O.W.'S PUBLIC OR PRIVATE, PRIOR TO WORKING IN THESE AREAS.
3. CONTRACTOR SHALL MAINTAIN THE SITE IN A MANNER SO THAT WORKMEN AND PUBLIC SHALL BE PROTECTED FROM INJURY, AND ADJOINING PROPERTY PROTECTED FROM DAMAGE.
4. ACCESS TO UTILITIES, FIRE HYDRANTS, STREET LIGHTING, ETC., SHALL REMAIN UNDISTURBED, UNLESS COORDINATED WITH THE RESPECTIVE UTILITY.
5. DO NOT SCALE THIS DRAWING AS IT IS A REPRODUCTION AND SUBJECT TO DISTORTION.
6. THE GENERAL CONTRACTOR SHALL REMOVE ALL DEBRIS FROM THE SITE UPON COMPLETION OF THE PROJECT AND AT LEAST ONCE A WEEK DURING CONSTRUCTION.
7. THE GENERAL CONTRACTOR SHALL KEEP THE AREA OUTSIDE THE "CONSTRUCTION LIMITS" BROOM CLEAN AT ALL TIMES.
8. CONTRACTOR SHALL MAINTAIN AN "AS-BUILT" SET OF DRAWINGS TO RECORD THE EXACT LOCATION OF ALL PIPING PRIOR TO CONCEALMENT. DRAWINGS SHALL BE GIVEN TO THE OWNER UPON COMPLETION OF THE PROJECT WITH A COPY OF THE TRANSMITTAL LETTER TO THE ENGINEER.
9. IF DEPARTURES FROM THE SPECIFICATIONS OR DRAWINGS ARE DEEMED NECESSARY BY THE CONTRACTOR, DETAILS OF SUCH DEPARTURES AND REASONS THEREOF SHALL BE GIVEN TO THE OWNER FOR REVIEW. NO DEPARTURES FROM THE CONTRACT DOCUMENT SHALL BE MADE WITHOUT THE PERMISSION OF THE OWNER.
10. CONTRACTOR SHALL VERIFY LOCATION AND ELEVATION OF ALL UNDERGROUND UTILITIES. THE LOCATION OF ALL EXISTING UTILITIES ARE NOT NECESSARILY SHOWN ON PLANS AND WHERE SHOWN ARE ONLY APPROXIMATE. THE CONTRACTOR SHALL ON HIS INITIATIVE AND AT NO EXTRA COST HAVE LOCATED ALL UNDERGROUND LINES AND STRUCTURES AS NECESSARY. NO CLAIMS FOR DAMAGES OR EXTRA COMPENSATION SHALL ACCRUE TO THE CONTRACTOR FROM THE PRESENCE OF SUCH PIPE OTHER OBSTRUCTIONS OR FROM DELAY DUE TO REMOVAL OR REARRANGEMENT OF THE SAME. THE CONTRACTOR SHALL BE RESPONSIBLE FOR ANY DAMAGE TO UNDERGROUND STRUCTURES. CONTACT NORTH CAROLINA ONE CALL" TOLL FREE 1-800-632-4949 AT LEAST 48 HOURS PRIOR TO CONSTRUCTION. THE CONTRACTOR IS RESPONSIBLE FOR CONTACTING ALL NONSUBSCRIBING UTILITIES.
11. ALL PERMITS RELATIVE TO PROJECT MUST BE OBTAINED, PRIOR TO CONSTRUCTION
12. ALL CONSTRUCTION TO BE IN ACCORDANCE WITH PERMITS ISSUED AND APPLICABLE STATE, COUNTY, AND LOCAL CODES.
13. FOR BUILDING DIMENSIONS, SEE ARCHITECTURAL DRAWINGS.
14. ALL DIMENSIONS AND RADII ARE TO OUTSIDE FACE OF BUILDING OR TO FACE OF CURB UNLESS OTHERWISE NOTED.
15. THE CONTRACTOR SHALL OBTAIN AND PAY FOR ALL INSPECTIONS, CERTIFICATIONS, EQUIPMENT, ETC., THAT MAY BE REQUIRED.
16. THE ENGINEER AND/OR OWNER DISCLAIM ANY ROLE IN THE CONSTRUCTION MEANS AND METHODS ASSOCIATED WITH THE PROJECT AS SET FORTH IN THESE PLANS.

GENERAL STORM SEWER NOTES

1. ALL STORM SEWERS SHALL BE CONSTRUCTED IN ACCORDANCE WITH PENDER COUNTY AND THE STATE OF NORTH CAROLINA REQUIREMENTS AS SPECIFIED ON THE DRAWINGS AND IN THE PROJECT SPECIFICATIONS.
2. BEDDING FOR ALL STORM SEWER PIPE SHALL BE AS SPECIFIED ON THE DRAWINGS, PROJECT SPECIFICATIONS, AND MANUFACTURER SPECIFICATIONS.
3. ALL STORM SEWER PIPES TO BE HDPE ADS N-12 OR EQUIVALENT, UNLESS OTHERWISE SPECIFIED.
4. ALL STORM SEWER PIPES SHOWN AS RCP ON THE PLANS SHALL BE REINFORCED CONCRETE PIPE CONFORMING TO ASTM C-76, UNLESS INDICATED OTHERWISE ON PLANS.

EXISTING UTILITY NOTES

1. IT IS THE RESPONSIBILITY OF THE GENERAL CONTRACTOR TO VERIFY THE ACTUAL LOCATION AND AVAILABILITY OF ALL EXISTING AND PROPOSED UTILITIES IN THE FIELD PRIOR TO GROUND BREAKING.
2. EXISTING UTILITIES AND STRUCTURES SHOWN, BOTH UNDERGROUND AND ABOVE GROUND, ARE BASED ON A FIELD SURVEY AND THE BEST AVAILABLE RECORD DRAWINGS. THE CONTRACTOR SHALL FIELD VERIFY FIELD CONDITIONS PRIOR TO BEGINNING RELATED CONSTRUCTION. ANY DISCREPANCIES SHALL BE REPORTED TO THE OWNER'S REPRESENTATIVE IMMEDIATELY.

UTILITY CONTACTS:

1. CONTACT THE NORTH CAROLINA ONE CALL CENTER PRIOR TO DOING AND DIGGING. 1-800-632-4949

NOTICE REQUIRED

ALL EXISTING UNDERGROUND UTILITIES SHALL BE PHYSICALLY LOCATED BY CONTRACTOR PRIOR TO THE BEGINNING OF ANY CONSTRUCTION IN THE VICINITY OF SAID UTILITIES.

CONTRACTORS SHALL NOTIFY OPERATORS WHO MAINTAIN UNDERGROUND UTILITY LINES IN THE AREA OF PROPOSED EXCAVATION AT LEAST THREE WORKING DAYS, BUT NOT MORE THAN TWELVE WORKING DAYS PRIOR TO ANY EXCAVATION OR DEMOLITION.

CONTACT "CAROLINA ONE CALL" AT
1-800-632-4949 or 811

EMERGENCY DIAL 911 POLICE - FIRE - RESCUE

NPDES NOTES

GROUND STABILIZATION		
SITE AREA DESCRIPTION	STABILIZATION TIME FRAME	STABILIZATION TIME FRAME EXCEPTIONS
PERIMETER DIKES, SWALES, DITCHES AND SLOPES	7 DAYS	NONE
QUALITY WATER (HQW) ZONES	7 DAYS	NONE
SLOPES STEEPER THAN 3:1	7 DAYS	IF SLOPES ARE 10' OR LESS IN LENGTH AND ARE NOT STEEPER THAN 2:1, 14 DAYS ARE ALLOWED.
SLOPES 3:1 OR FLATTER	14 DAYS	7-DAYS FOR SLOPES GREATER THAN 50 FEET IN LENGTH
ALL OTHER AREAS WITH SLOPES FLATTER THAN 4:1	14 DAYS	NONE (EXCEPT FOR PERIMETERS AND HQW ZONES)

2. BUILDING WASTES HANDLING
   1. NO PAINT OR LIQUID WASTES IN STREAM OR STORM DRAINS
   2. DEDICATED AREAS FOR DEMOLITION, CONSTRUCTION AND OTHER WASTES MUST BE LOCATED 50' FROM STORM DRAINS AND STREAMS UNLESS NO REASONABLE ALTERNATIVE AVAILABLE.
   3. EARTHEN-MATERIALS STOCKPILES MUST BE LOCATED 50' FROM STORM DRAINS AND STREAMS UNLESS NO REASONABLE ALTERNATIVES AVAILABLE.
   4. CONCRETE MATERIALS MUST BE CONTROLLED TO AVOID CONTACT WITH SURFACE WATERS, WETLANDS OR BUFFERS.
3. INSPECTIONS
   1. SAME WEEKLY INSPECTION REQUIREMENTS
   2. SAME RAIN GAUGE & INSPECTIONS AFTER 0.5" RAIN EVENT
   3. INSPECTIONS ARE ONLY REQUIRED DURING "NORMAL BUSINESS HOURS".
   4. INSPECTION REPORTS MUST BE AVAILABLE ON-SITE DURING BUSINESS HOURS UNLESS A SITE-SPECIFIC EXEMPTION IS APPROVED.
   5. RECORDS MUST BE KEPT FOR 3 YEARS AND AVAILABLE UPON REQUEST.
   6. ELECTRONICALLY AVAILABLE RECORDS MAY BE SUBSTITUTED UNDER CERTAIN CONDITIONS.
4. SEDIMENT BASINS
   1. OUTLET STRUCTURES MUST WITHDRAW FROM BASIN SURFACE UNLESS DRAINAGE AREA IS LESS THAN 1 ACRE.
   2. USE ONLY DWQ-APPROVED FLOCCULENTS.

NPDES - SPECIFIC PLAN SHEET NOTES

1. THIS PAGE IS SUBMITTED TO COMPLY WITH NPDES GENERAL STORMWATER PERMIT NCG010000 ONLY.
2. THIS PAGE CAN BE APPROVED BY THE COUNTY PURSUANT TO NPDES GENERAL STORMWATER PERMIT NCG010000 ONLY.
3. THIS PAGE OF APPROVED PLANS IS ENFORCEABLE EXCLUSIVELY PURSUANT TO NPDES GENERAL STORMWATER PERMIT NCG010000.
4. THE COUNTY IS NOT AUTHORIZED TO ENFORCE THIS PAGE OF THE PLANS AND IT IS NOT A PART OF THE APPROVED PLANS FOR THE PURPOSES OF ENFORCEMENT ACTION UNDER TEH COUNTY CODE.

NORTH CAROLINA PROFESSIONAL SEAL 019742 ENGINEER MARK N. HARGROVE

PRELIMINARY - DO NOT USE FOR CONSTRUCTION

No.	Revision	Date	By

Designer MNH	Scale AS SHOWN
Drawn By MNH	Date OCTOBER, 2017
Checked By MNH	Job No.

SLOOP POINT MINI-STORAGE
PENDER COUNTY NORTH CAROLINA

AJ MCGIRT LAND MANAGEMENT, LLC
P.O. Box 15148
WILMINGTON, NC 28408

PORT CITY CONSULTING ENGINEERS, PLLC
6216 STONEBRIDGE ROAD
WILMINGTON, NC 28409
910-599-1744 LICENSE No. P-1032

GENERAL NOTES

Sheet No. C-1

n/f
Quarterhorse
Lane, LLC
D.B. 1493-1053
PIN# 4204-76-4894-0000

Zoning: PD
Land Use:
Recreation Center

n/f
Michael D. Hoover, etal
D.B. 1228-111
PIN# 4204-77-7047-0000

Zoning: General Business
Land Use:
Vacant

n/f
Pinnacle Property
of Hampstead
D.B. 1481-113
PIN# 4204-76-2232-0000

Zoning: PD
Land Use:
Vacant

n/f
Nicholas Treseder -
Trustee etal
D.B. 2418-324
PIN# 4204-87-1130-0000

Zoning: PD
Land Use:
Vacant

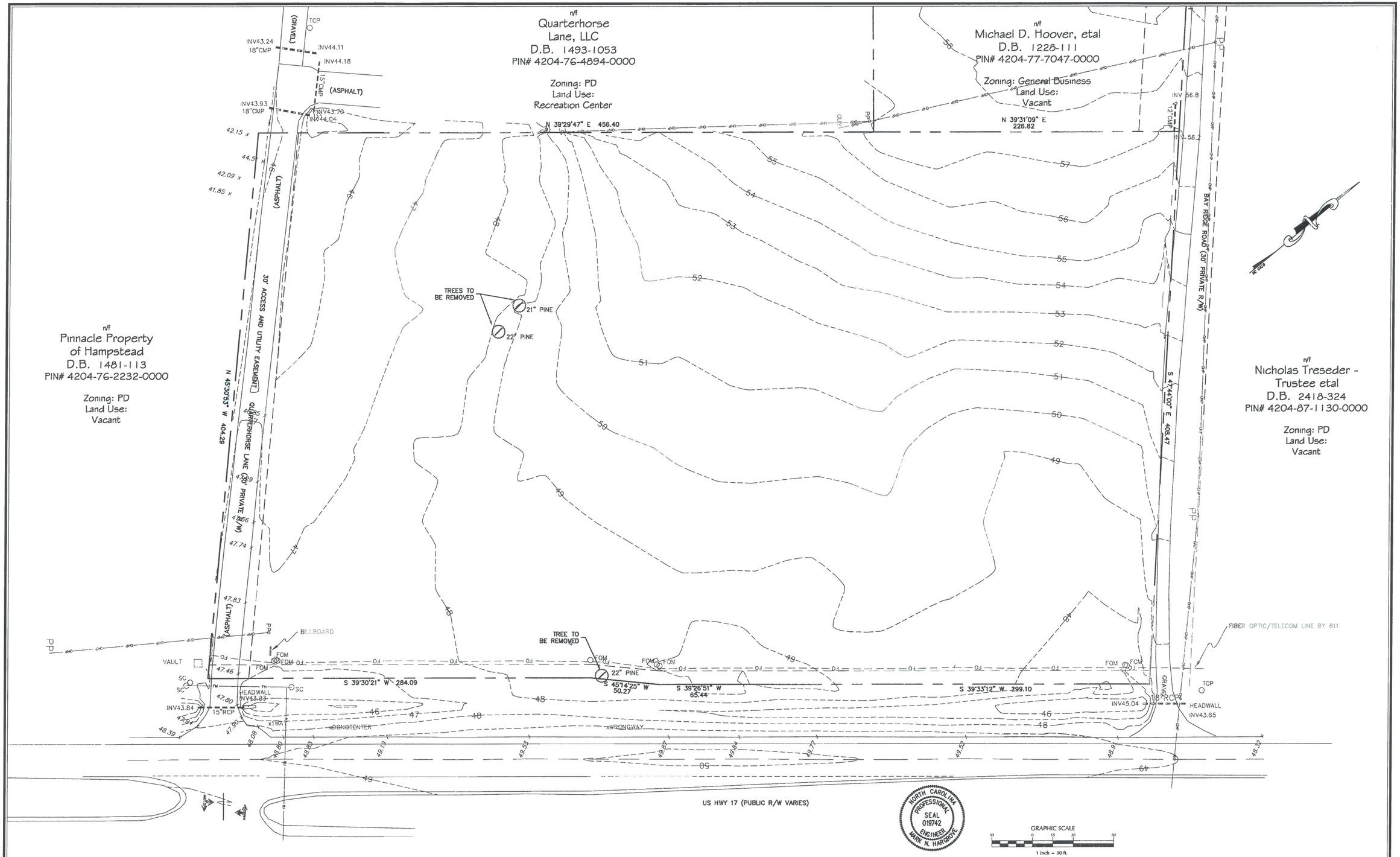

NORTH CAROLINA PROFESSIONAL SEAL 019742 ENGINEER MARK N. HARGROVE

PRELIMINARY - DO NOT USE FOR CONSTRUCTION

No.	Revision	Date	By

Designer MNH	Scale AS SHOWN
Drawn By MNH	Date OCTOBER, 2017
Checked By MNH	Job No.

SLOOP POINT MINI-STORAGE
PENDER COUNTY NORTH CAROLINA

AJ MCGIRT LAND MANAGEMENT, LLC
P.O. BOX 15148
WILMINGTON, NC 28408

PORT CITY CONSULTING
ENGINEERS, PLLC
6216 STONEBRIDGE ROAD
WILMINGTON, NC 28409
910-599-1744 LICENSE No. P-1032

EXISTING CONDITIONS

Sheet No.
C-2

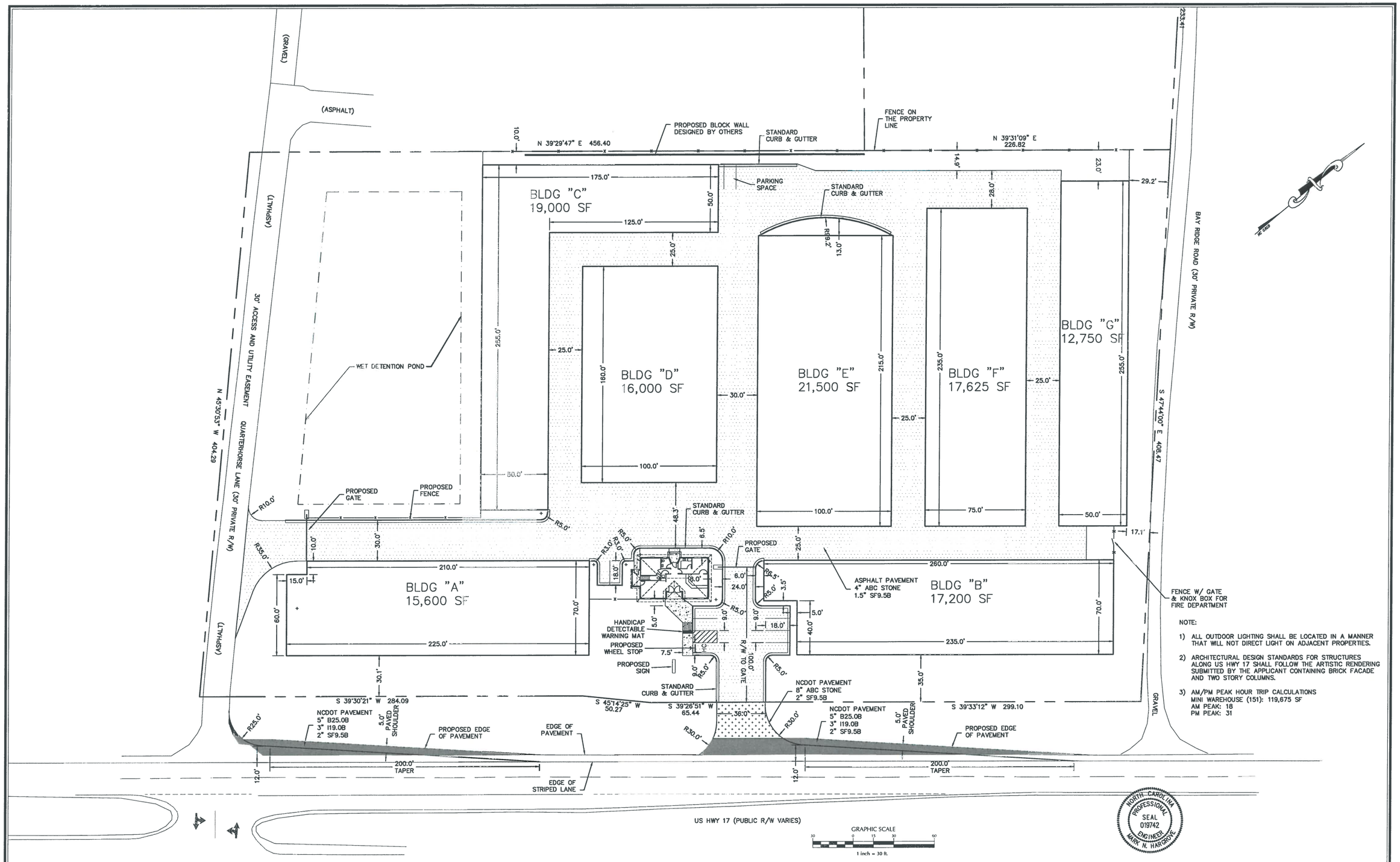

NOTE:

1) ALL OUTDOOR LIGHTING SHALL BE LOCATED IN A MANNER THAT WILL NOT DIRECT LIGHT ON ADJACENT PROPERTIES.

2) ARCHITECTURAL DESIGN STANDARDS FOR STRUCTURES ALONG US HWY 17 SHALL FOLLOW THE ARTISTIC RENDERING SUBMITTED BY THE APPLICANT CONTAINING BRICK FACADE AND TWO STORY COLUMNS.

3) AM/PM PEAK HOUR TRIP CALCULATIONS
MINI WAREHOUSE (151): 119,675 SF
AM PEAK: 18
PM PEAK: 31

NORTH CAROLINA PROFESSIONAL SEAL 019742 ENGINEER MARK N. HARGROVE

PRELIMINARY - DO NOT USE FOR CONSTRUCTION

No.	Revision	Date	By

Designer MNH	Scale AS SHOWN
Drawn By MNH	Date OCTOBER, 2017
Checked By MNH	Job No.

SLOOP POINT MINI-STORAGE

PENDER COUNTY NORTH CAROLINA

AJ MCGIRT LAND MANAGEMENT, LLC
P.O. BOX 15148
WILMINGTON, NC 28408

PORT CITY CONSULTING ENGINEERS, PLLC
6216 STONEBRIDGE ROAD
WILMINGTON, NC 28409
910-599-1744 LICENSE No. P-1032

SITE LAYOUT PLAN

Sheet No. C-3

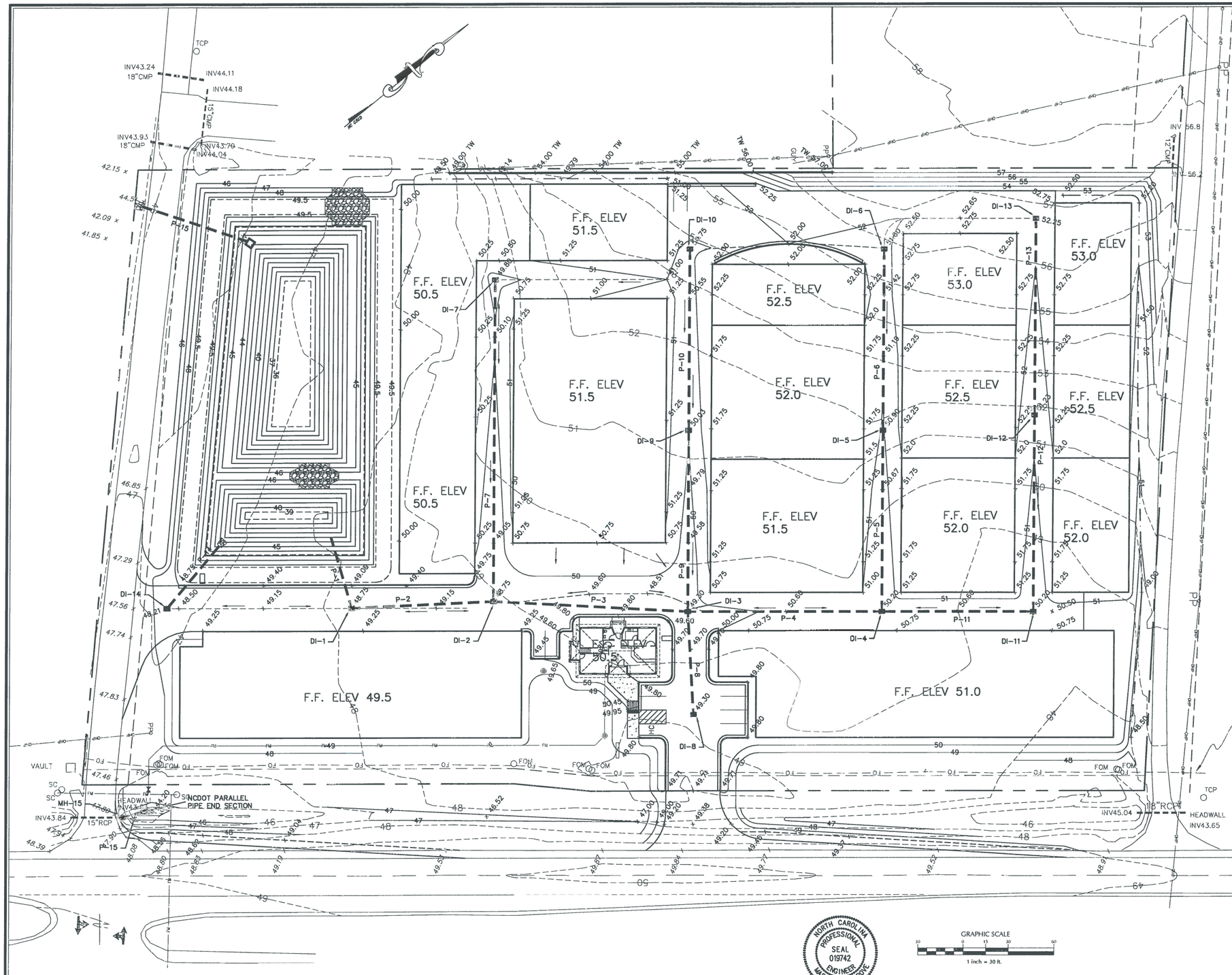

STORM CULVERT TABLE

Line ID	Line Length (ft)	Pipe Size (in)	Pipe Slope (%)	Inv Elev Dn (ft)	Inv Elev Up (ft)	Grnd/Rim Dn (ft)	Grnd/Rim Up (ft)
P-1	48	36	0.46	43.15	43.37	N/A	48.75
P-2	94	36	0.30	43.37	43.65	48.75	48.75
P-3	128	36	0.88	43.65	44.77	48.75	49.30
P-4	128	30	0.75	44.77	45.73	49.30	50.20
P-5	119	24	0.99	45.73	46.90	50.20	50.90
P-6	119	24	0.51	46.90	47.50	50.90	51.60
P-7	211	15	1.00	43.71	45.82	48.75	49.80
P-8	68	15	1.76	44.77	45.96	49.30	49.30
P-9	119	15	1.04	44.77	46.00	49.30	50.03
P-10	119	15	1.00	46.00	47.19	50.03	51.00
P-11	90	24	0.50	45.73	46.18	50.20	50.20
P-12	129	18	0.90	46.18	47.34	50.20	51.23
P-13	129	18	0.71	47.34	48.25	51.23	52.25
P-14	54	12	0.37	44.80	45.00	N/A	48.50
P-15	12	15	0.50	43.83	43.89	N/A	47.80

ALL PIPE TO BE DOUBLE WALL HDPE EXCEPT P-15. P-15 SHALL BE CL III RCP
LENGTH FOR P-14 & P-15 INCLUDES FLARED END SECTIONS

STORM STRUCTURE TABLE

Structure #	Inv Elev (ft)	Rim Elev (ft)
DI-1	43.37	48.75
DI-2	43.65	48.75
DI-3	44.77	49.30
DI-4	45.73	50.20
DI-5	46.90	50.90
DI-6	47.50	51.60
DI-7	45.82	49.80
DI-8	45.96	49.30
DI-9	46.00	50.03
DI-10	47.19	51.00
DI-11	46.18	50.20
DI-12	47.34	51.23
DI-13	48.25	52.25
DI-14	45.00	48.21
MH-15	47.80	43.83

DI-DROP INLET
MH - MANHOLE

NOTE: RUNOFF FROM OFFICE BUILDING TO BE DIRECTED TO AREAS THAT DRAIN TO THE WET DETENTION POND BY THE USE OF GUTTERS AND DOWNSPOUTS

RUNOFF FROM MINI STORAGE BUILDINGS TO BE DIRECTED TO AREAS THAT DRAIN TO THE WET DETENTION POND.

NORTH CAROLINA PROFESSIONAL SEAL 019742 ENGINEER MARK N. HARGROVE

PRELIMINARY - DO NOT USE FOR CONSTRUCTION

No.	Revision	Date	By

Designer	MNH	Scale	AS SHOWN
Drawn By	MNH	Date	OCTOBER, 2017
Checked By	MNH	Job No.	

SLOOP POINT MINI-STORAGE
PENDER COUNTY NORTH CAROLINA

AJ MCGIRT LAND MANAGEMENT, LLC
P.O. BOX 15148
WILMINGTON, NC 28408

PORT CITY CONSULTING ENGINEERS, PLLC
6216 STONEBRIDGE ROAD
WILMINGTON, NC 28409
910-599-1744 LICENSE No. P-1032

GRADING & DRAINAGE PLAN

Sheet No. C-4

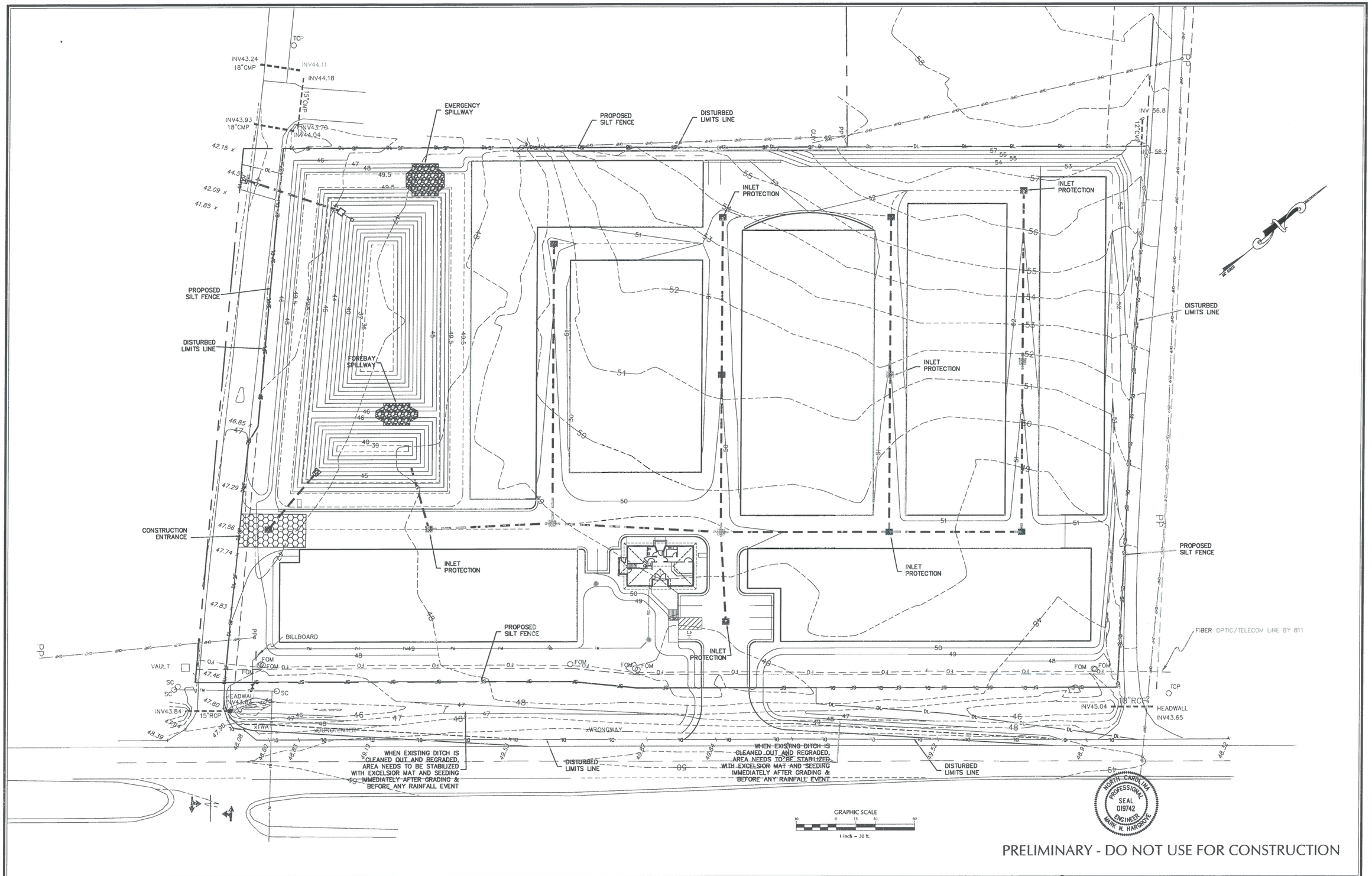

PRELIMINARY - DO NOT USE FOR CONSTRUCTION

No.	Revision	Date	By

Designer MNH	Scale AS SHOWN
Drawn By MNH	Date OCTOBER, 2017
Checked By MNH	Job No.

SLOOP POINT MINI-STORAGE
PENDER COUNTY NORTH CAROLINA

AJ MCGIRT LAND MANAGEMENT, LLC
P.O. BOX 15148
WILMINGTON, NC 28408

PORT CITY CONSULTING ENGINEERS, PLLC
6216 STONEBRIDGE ROAD
WILMINGTON, NC 28409
910-599-1744 LICENSE No. P-1032

EROSION CONTROL PLAN

Sheet No. C-4.1

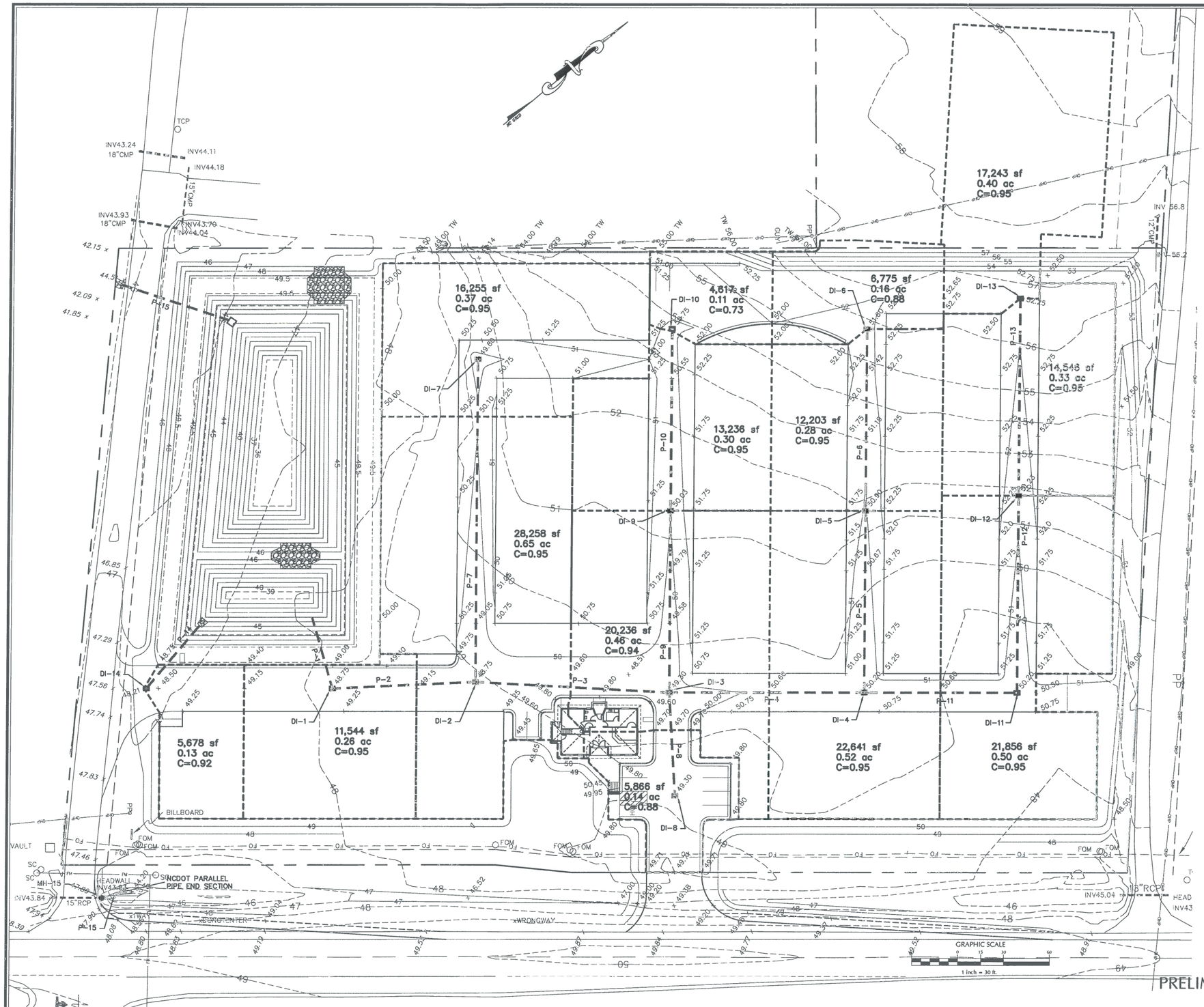

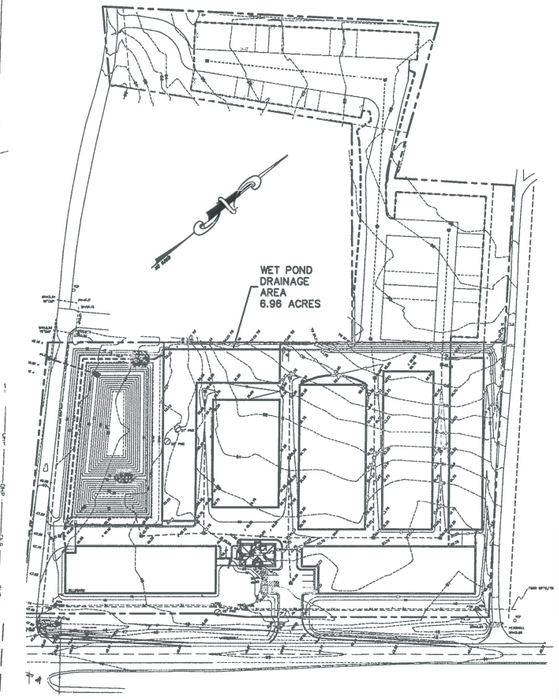

POND DRAINAGE AREA

1" = 100'

NOTE: POND DRAINAGE AREA INCLUDES FUTURE AREA THAT HAS NOT BEEN ACQUIRED AT THE TIME THE PLANS WERE PREPARED. THE WET DETENTION BASIN WAS SIZED ASSUMING THIS PROPERTY WILL BE ACQUIRED.

NORTH CAROLINA PROFESSIONAL SEAL 019742 ENGINEER MARK N. HARGROVE

PRELIMINARY - DO NOT USE FOR CONSTRUCTION

No.	Revision	Date	By

Designer MNH	Scale AS SHOWN
Drawn By MNH	Date OCTOBER, 2017
Checked By MNH	Job No.

SLOOP POINT MINI-STORAGE

PENDER COUNTY NORTH CAROLINA

AJ MCGIRT LAND MANAGEMENT, LLC
P.O. BOX 15148
WILMINGTON, NC 28408

PORT CITY CONSULTING ENGINEERS, PLLC
6216 STONEBRIDGE ROAD
WILMINGTON, NC 28409
910-599-1744 LICENSE No. P-1032

DRAINAGE AREA PLAN

Sheet No. C-4.2

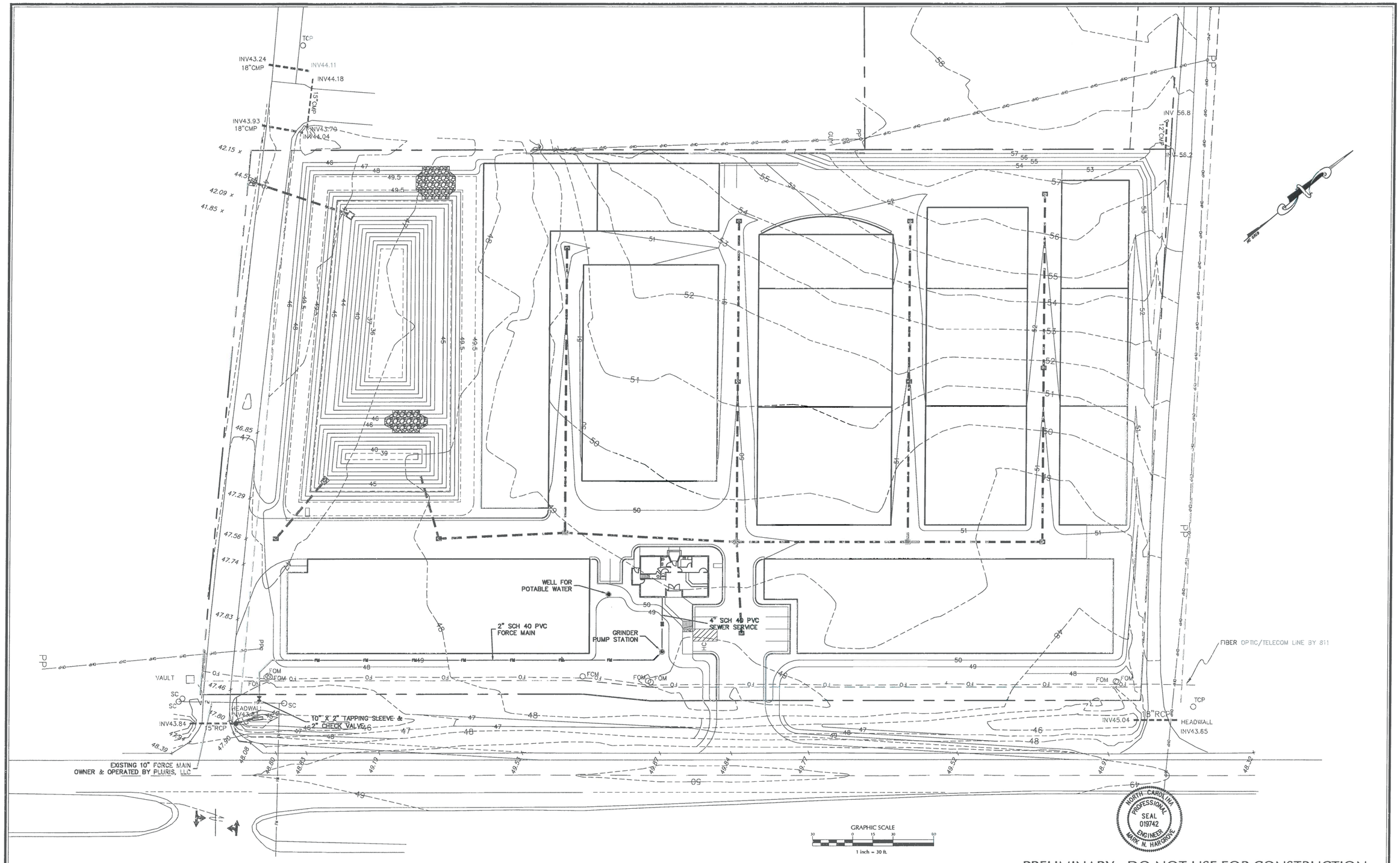

PRELIMINARY - DO NOT USE FOR CONSTRUCTION

No.	Revision	Date	By

Designer MNH	Scale AS SHOWN
Drawn By MNH	Date OCTOBER, 2017
Checked By MNH	Job No.

SLOOP POINT MINI-STORAGE

PENDER COUNTY NORTH CAROLINA

AJ MCGIRT LAND MANAGEMENT, LLC
P.O. BOX 15148
WILMINGTON, NC 28408

PORT CITY CONSULTING ENGINEERS, PLLC
6216 STONEBRIDGE ROAD
WILMINGTON, NC 28409
910-599-1744 LICENSE No. P-1032

UTILITY PLAN

Sheet No. C-5

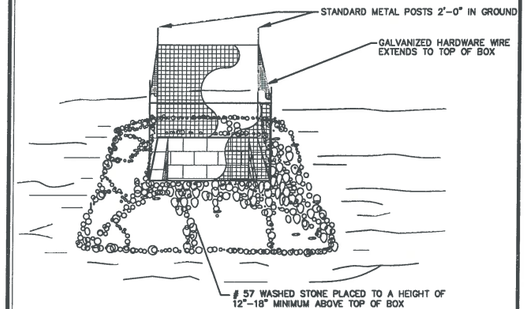

STANDARD CATCH BASIN/YARD INLET PROTECTION

N.T.S.

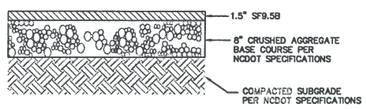

NCDOT DRIVEWAY PAVEMENT DETAIL

N.T.S.

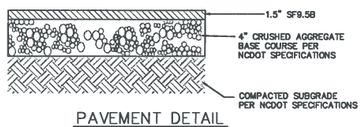

PAVEMENT DETAIL

N.T.S.

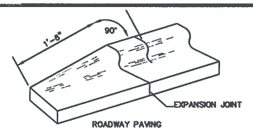

24" CURB & GUTTER TERMINATION DETAIL

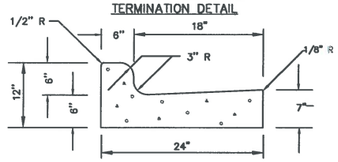

24" CURB AND GUTTER

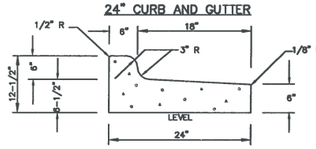

(TO BE USED WHEN PAVEMENT IS SLOPED AWAY FROM ISLAND 1/4' : 1'-0" SLOPE OR AS SHOWN ON PLANS)

24" CURB AND GUTTER (REVERSE SLOPE)

GENERAL NOTES:

CONSTRUCTION JOINTS SHALL BE SPACED AT MAX. 10' INTERVALS, EXCEPT THAT A 15 FOOT SPACING MAY BE USED WHEN A MACHINE IS USED OR WHEN SATISFACTORY SUPPORT FOR THE FACE FORM CAN BE OBTAINED WITHOUT THE USE OF TEMPLATES AT 10 FOOT INTERVALS. JOINT SPACING MAY BE ALTERED BY THE ENGINEER TO PREVENT UNCONTROLLED CRACKING. CONTRACTION JOINTS MAY BE INSTALLED BY THE USE OF TEMPLATES OR FORMED BY OTHER APPROVED METHODS. WHERE SUCH JOINTS ARE NOT FORMED BY TEMPLATES, A MINIMUM DEPTH OF 1-1/2" SHALL BE OBTAINED. ALL CONTRACTION JOINTS EXCEPT IN 8" X 6" MEDIAN CURB SHALL BE FILLED WITH JOINT SEALER. EXPANSION JOINTS SHALL BE SPACED AT 90' INTERVALS AND ADJACENT TO ALL RIGID OBJECTS.

CURB AND GUTTER

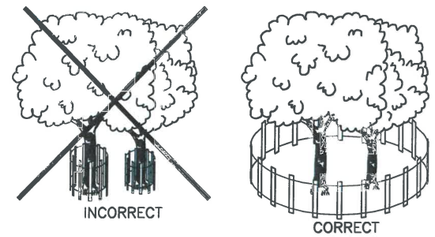

BARRIER SHOULD BE INSTALLED AT THE DRIP LINE OF TREE BRANCHES

NOTES:

IN SPITE OF PRECAUTIONS, SOME DAMAGE TO PROTECTED TREES MAY OCCUR. IN SUCH CASES REPAIR ANY DAMAGE TO THE CROWN, TRUNK OR ROOT SYSTEM IMMEDIATELY.

- FENCE SHALL BE PLACED 1.5 TIMES THE DIAMETER OF THE PLANT
- REPAIR ROOTS BY REMOVING THE DAMAGED AREAS WITH A CLEAN CUT.
- REPAIR DAMAGE TO BARK BY TRIMMING AROUND THE DAMAGED AREAS.
- CUT OFF ALL DAMAGED TREE LIMBS ABOVE THE TREE COLLAR AT THE TRUNK OR MAIN BRANCH.

EXAMPLE OF TREE PROTECTION FENCING

N.T.S.

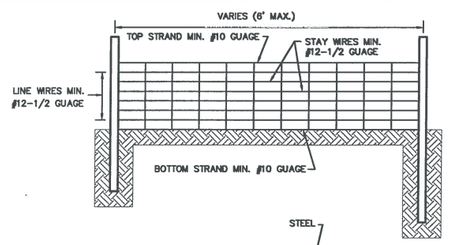

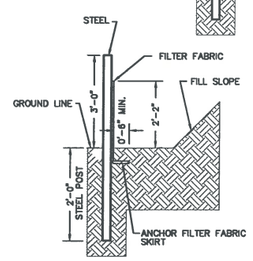

NOTES:

1. WIRE SHALL BE A MINIMUM OF 32" IN WIDTH AND SHALL HAVE A MINIMUM OF 6 LINE WIRES W/12" STAY SPACING
2. FILTER FABRIC SHALL BE A MINIMUM OF 36" IN WIDTH AND SHALL BE FASTENED ADEQUATELY TO THE WIRE
3. STEEL POST SHALL BE 5' 0" IN HEIGHT AND BE OF SELF FASTENER ANGLE STEEL TYPE

SILT FENCE

N.T.S.

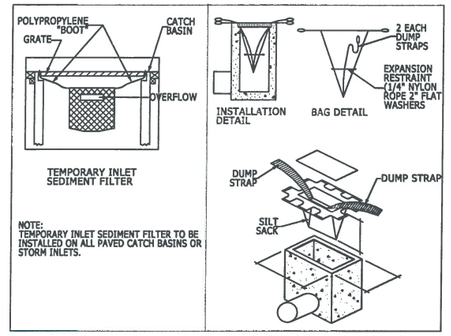

NOTE:
TEMPORARY INLET SEDIMENT FILTER TO BE INSTALLED ON ALL PAVED CATCH BASINS OR STORM INLETS.

SILT SACK DETAIL

NOT TO SCALE

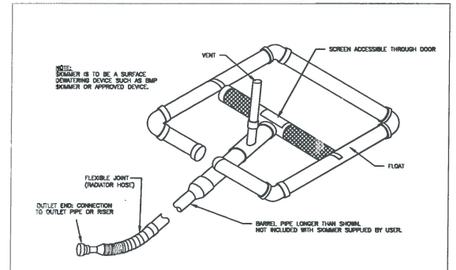

NOTE: USE 4.0 – INCH FAIRCLOTH SKIMMER WITH A 2.9–INCH DIAMETER ORIFICE

STANDARD SKIMMER DETAIL (FAIRCLOTH SKIMMER)

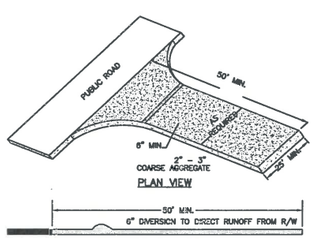

PLAN VIEW

SECTION VIEW

TEMPORARY CONSTRUCTION ENTRANCE

N.T.S.

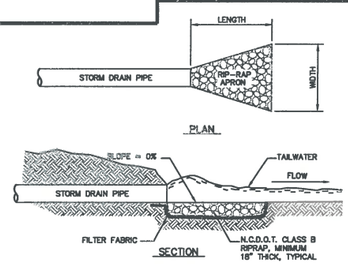

RIP-RAP SCHEDULE

Ⓟ	PIPE DIA. (IN.)	LENGTH (FT.)	UPSTREAM WIDTH (FT.)	DOWNSTREAM WIDTH (FT.)
RRA-1	18	6	4.5	6.0

RIP-RAP APRON

N.T.S.

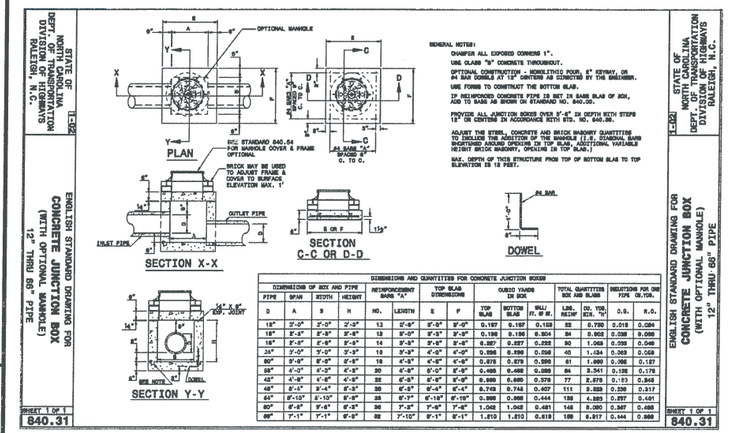

NOTE: THE CONCRETE JUNCTION BOX IS AVAILABLE IN BRICK. SEE 840.32 BRICK JUNCTION BOX DETAIL IN THE NCDOT DIVISION OF HIGHWAY STANDARDS.

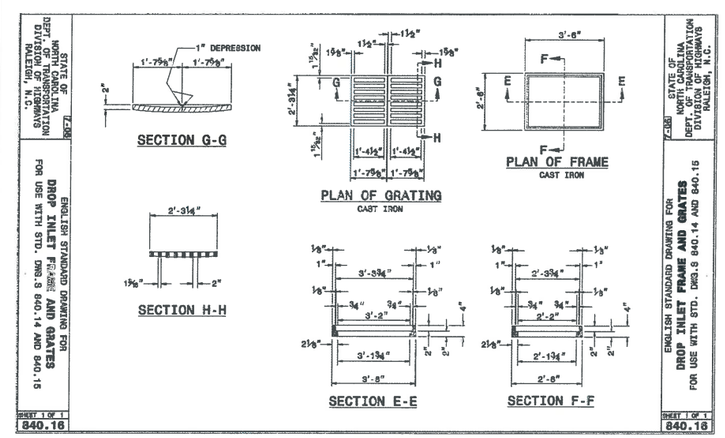

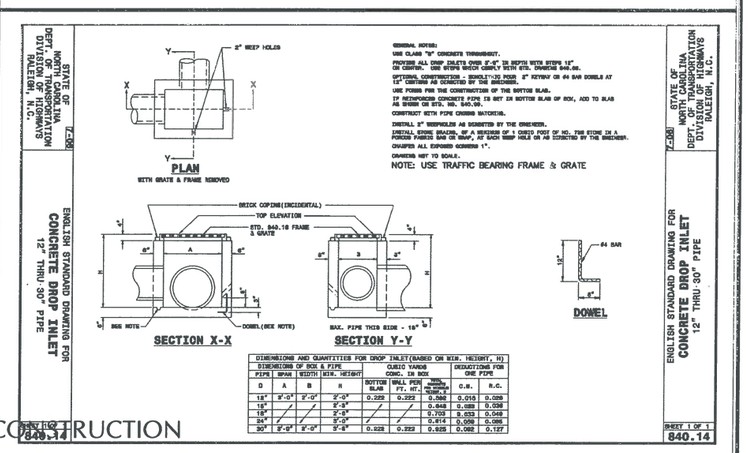

NORTH CAROLINA PROFESSIONAL SEAL 019742 ENGINEER MARK N. HARGROVE

PRELIMINARY - DO NOT USE FOR CONSTRUCTION

No.	Revision	Date	By

Designer MNH	Scale AS SHOWN
Drawn By MNH	Date OCTOBER, 2017
Checked By MNH	Job No.

SLOOP POINT MINI-STORAGE

PENDER COUNTY NORTH CAROLINA

AJ MCGIRT LAND MANAGEMENT, LLC
P.O. BOX 15148
WILMINGTON, NC 28408

PORT CITY CONSULTING ENGINEERS, PLLC
6216 STONEBRIDGE ROAD
WILMINGTON, NC 28409
910-599-1744 LICENSE No. P-1032

MISCELLANEOUS DETAILS

Sheet No. C-6.0

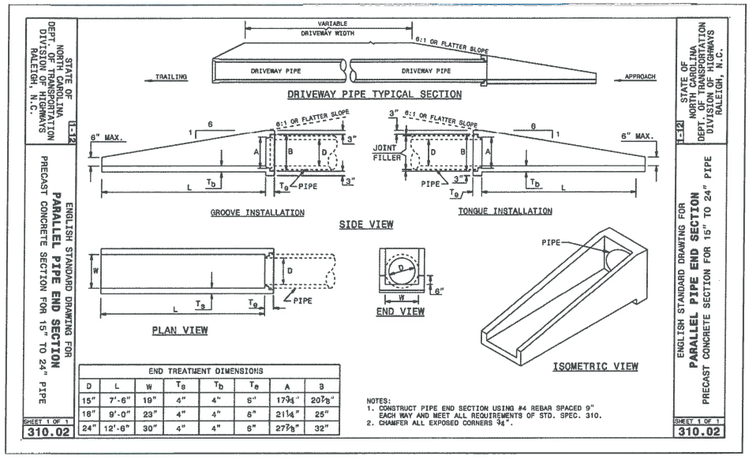

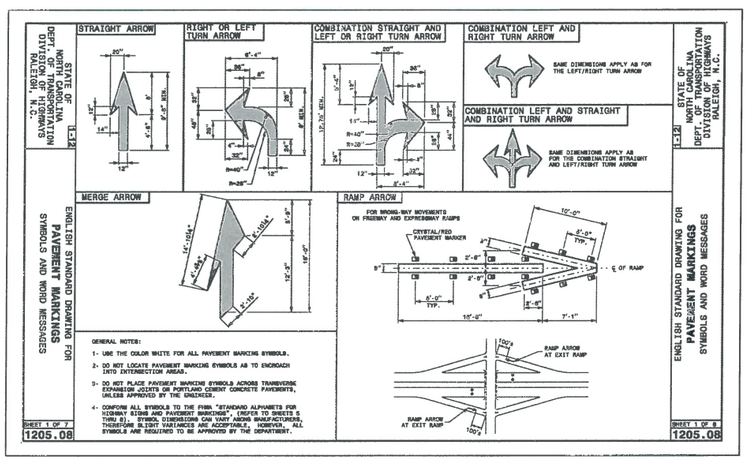

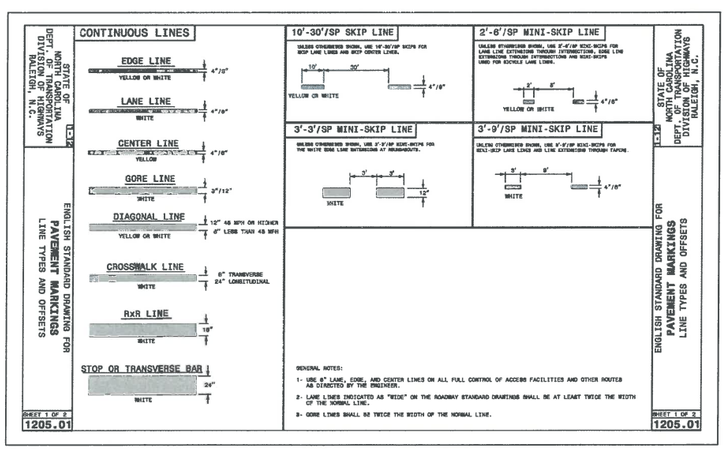

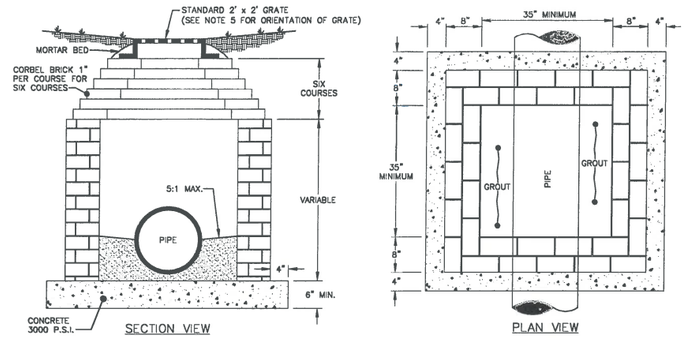

NOTES:
1. EITHER SOLID BRICK, SOLID BLOCK, OR PRECAST CONCRETE MAY BE USED.
2. FOR 24 INCH R.C.P. AND LARGER USE PIPE DIAMETER PLUS 12 INCHES FOR MINIMUM INSIDE DIMENSION.
3. HEAVY DUTY GRATE INLETS SHALL BE USED WITHIN TRAVEL AREAS.
4. STANDARD STEPS REQUIRED @ 16 INCHES O.C. WHERE DEPTH EXCEEDS 3 FEET.
5. WHERE STEPS ARE REQUIRED, USE OF PRECAST CONCRETE SLAB SHALL BE USED AS TOP AND GRATE POSITIONED OVER STEPS.
6. YARD INLETS DEEPER THAN 10 FEET SHALL REQUIRE DOUBLE WALLS.

DETAIL FOR DROP INLETS #1 – #3

N.T.S.

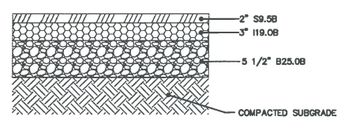

TURNLANE PAVEMENT DETAIL

NOT TO SCALE

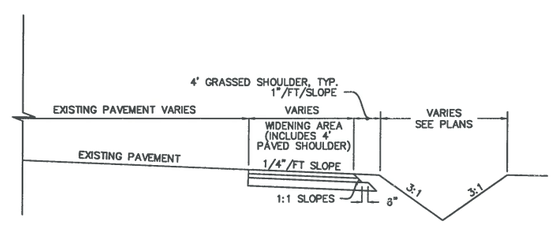

ROAD WIDENING SECTION

NOT TO SCALE

NORTH CAROLINA PROFESSIONAL SEAL 019742 ENGINEER MARK N. HARGROVE

No.	Revision	Date	By

Designer MNH	Scale AS SHOWN
Drawn By MNH	Date OCTOBER, 2017
Checked By MNH	Job No.

SLOOP POINT MINI STORAGE
PENDER COUNTY NORTH CAROLINA

AJ MCGIRT LAND MANAGEMENT, LLC
P.O. BOX 15148
WILMINGTON, NC 28408

PORT CITY CONSULTING ENGINEERS, PLLC
6216 STONEBRIDGE ROAD
WILMINGTON, NC 28409
910-599-1744 LICENSE No. P-1032

MISCELLANEOUS DETAILS

Sheet No. C-6.1

NOTES:

1. DO NOT PLANT TREES WITHIN 10 FEET OF THE INLET OR OUTLET PIPES, SPILLWAYS OR FLOW SPREADERS. TREE SPECIES WITH WATER-SEEKING ROOTS SUCH AS WEEPING WILLOWS AND POPLARS, SHOULD BE AVOIDED WITHIN 50 FEET OF PIPES OR MANMADE STRUCTURES. EVERGREEN TREES WHICH PRODUCE RELATIVELY LITTLE LEAF-FALL ARE PREFERRED IN AREAS DRAINING TO DETENTION DEVICES. TREES SHOULD BE SET BACK SO THAT BRANCHES DO NOT EXTEND OVER THE PERMANENT POOL.

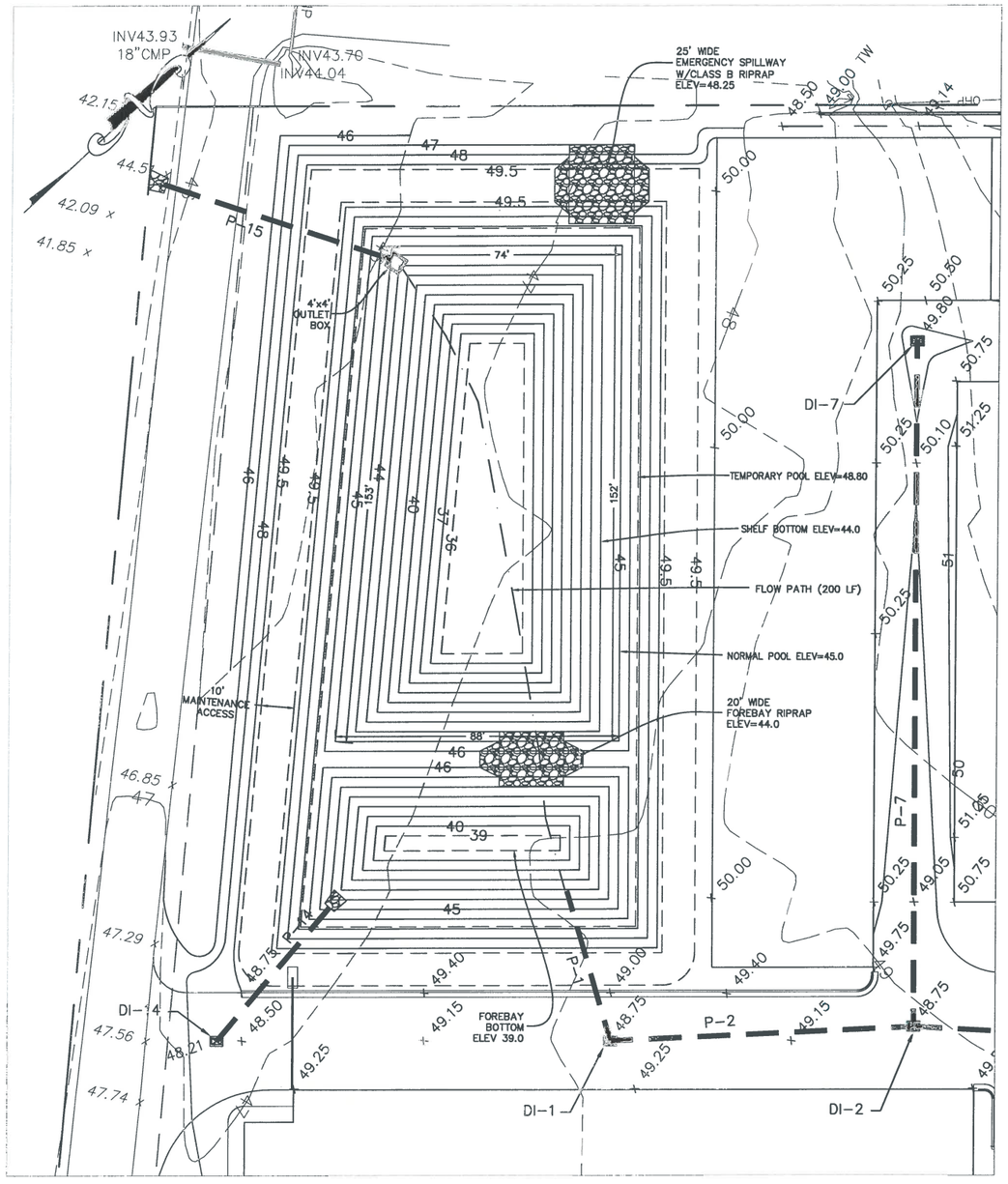

GRAPHIC SCALE

1 inch = 20 ft.

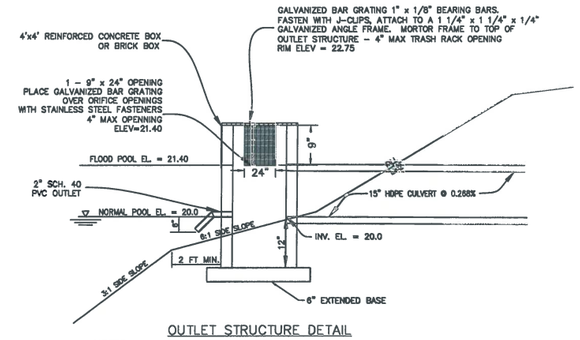

OUTLET STRUCTURE DETAIL

N.T.S.

NOTES:

1. DESIGN ELEVATIONS FOR WET DETENTION BASIN ARE TO AN ELEVATION OF 13.0 IN THE MAIN POND AND 16.0 IN THE FOREBAY WITH SEDIMENT STORAGE DOWN TO 12.0 IN THE MAIN POND AND 15.0 IN THE FOREBAY.
2. ALL IMPERVIOUS SITE AREA TO BE DRAINED TO PROPOSED STORM SEWER SYSTEM AND DISCHARGED TO THE WET DETENTION POND.
3. POND WILL BE PUMPED DOWN BY MECHANICAL MEANS IN CASE OF EMERGENCY.
4. PRIOR TO USE AS A WET DETENTION BASIN, SEDIMENT BASIN WILL BE MUCKED OUT.
5. POND SIDE SLOPES TO BE SODDED WITH CENTIPEDE GRASS OR EQUIVALENT.
6. ALL SLOPES ABOVE PERMANENT POOL TO BE 3:1 MAX.

DESIGNER'S PLAN CERTIFICATION

The following designer's plan certification shall be shown on each plan drawing sheet:

Designer's Plan Certification:

"I hereby certify that this plan has been prepared in accordance with the latest New Hanover County Ordinances and Storm Water Design Manual."

Signature:
Printed Name and Title: Mark N. Hargrove, Project Manager
Date:
Registration Number: 019742

OWNER'S CERTIFICATION

The following owner's plan certification shall be shown on each plan drawing sheet:

Property Owner Certification:

"I (We) hereby certify that I (we) am (are) the current owner of the property and that upon receipt of "Authorization-To-Construct any clearing, grading, construction or development, will be performed in accordance with this plan and that the applicable ordinances and rules of New Hanover County, the State of North Carolina and Federal Government and its agencies which are hereby made part of this plan. As the owner, (we) accept full responsibility for the construction and operation and maintenance of the proposed facilities. I (We) will not attempt to transfer any of this responsibility without the written authorization of New Hanover County."

Signature:
Printed Name and Title: Trey McGirt - Member Manager
Date:

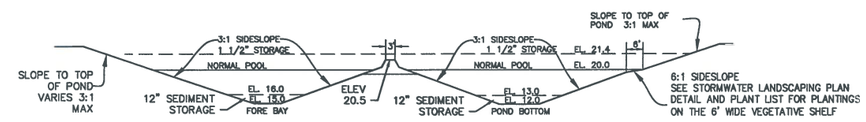

NORMAL POOL ELEVATION	SHELF BOTTOM ELEVATION	POND DEPTH (FT)	VOLUME SHELF (CF)	POND BOTTOM SHELF AREA (SF)	SURFACE AREA PROVIDED (SF)	SURFACE AREA REQUIRED (SF)	PERIMETER PERMANENT POOL (LF)	AVERAGE POND DEPTH (FT)
20.0	19.0	7.0	1,143	4,880	6,753	6,308	381	4.0

POND CROSS-SECTION

N.T.S.

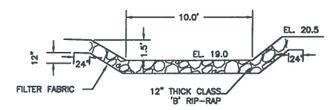

FOREBAY RIP-RAP

N.T.S.

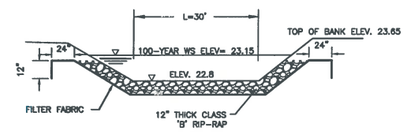

EMERGENCY SPILLWAY

N.T.S.

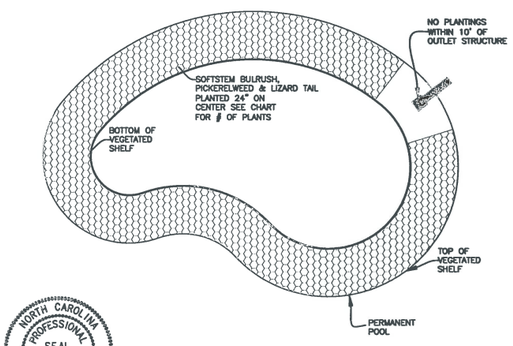

TYPICAL VEGETATED SHELF

LANDSCAPING PLAN

VEGETATIVE SHELF = 1,621 S.F. @ 1 PLANT PER 4 SF (24" O.C.) = 405 PLANTS								
PLANT TYPE	QTY		BOTANICAL NAME	COMMON NAME	ROOT	CALIPER	HEIGHT	NOTES
HERBACEOUS	135		Schoenplectus tabernaemontani	Softstem Bulrush	CONT.	4" Pot		24" O.C.
	135		Pontedaria cordata	Pickerelweed	CONT.	4" Pot		24" O.C.
	135		Saururus cernuus	Lizard Tail	CONT.	4" Pot		24" O.C.

NOTES:

1. NO PLANTINGS WITHIN 10' OF OUTLET STRUCTURE.

2. BECAUSE MOST STORMWATER BASINS ARE EXCAVATED TO DEEP SUB-SOILS, THEY OFTEN LACK THE NUTRIENTS AND ORGANIC MATTER NEEDED TO SUPPORT VIGOROUS GROWTH OF PLANTS. ALL LANDSCAPE MATERIAL, INCLUDING GRASS, SHOULD BE PLANTED IN GOOD TOPSOIL. NATIVE UNDERLYING SOILS MAY BE SUITABLE FOR PLANTING IF AMENDED WITH 4 INCHES OF WELL-AGED COMPOST TILLED INTO THE SUBGRADE. COMPOST SHOULD MEET SPECIFICATIONS FOR GRADE A COMPOST QUALITY.

3. A MINIMUM TWO-YEAR WARRANTY PERIOD STIPULATING REQUIREMENTS FOR PLANT SURVIVAL/REPLACEMENT.

SHALLOW WATER

NORTH CAROLINA PROFESSIONAL SEAL 019742 ENGINEER MARK N. HARGROVE

PRELIMINARY - DO NOT USE FOR CONSTRUCTION

No.	Revision	Date	By

Designer MNH	Scale AS SHOWN
Drawn By MNH	Date OCTOBER, 2017
Checked By MNH	Job No.

SLOOP POINT MINI STORAGE

PENDER COUNTY NORTH CAROLINA

AJ MCGIRT LAND MANAGEMENT, LLC
P.O. BOX 15148
WILMINGTON, NC 28408

PORT CITY CONSULTING ENGINEERS, PLLC
6216 STONEBRIDGE ROAD
WILMINGTON, NC 28409
910-599-1744 LICENSE No. P-1032

POND DETAILS

Sheet No. C-6.2

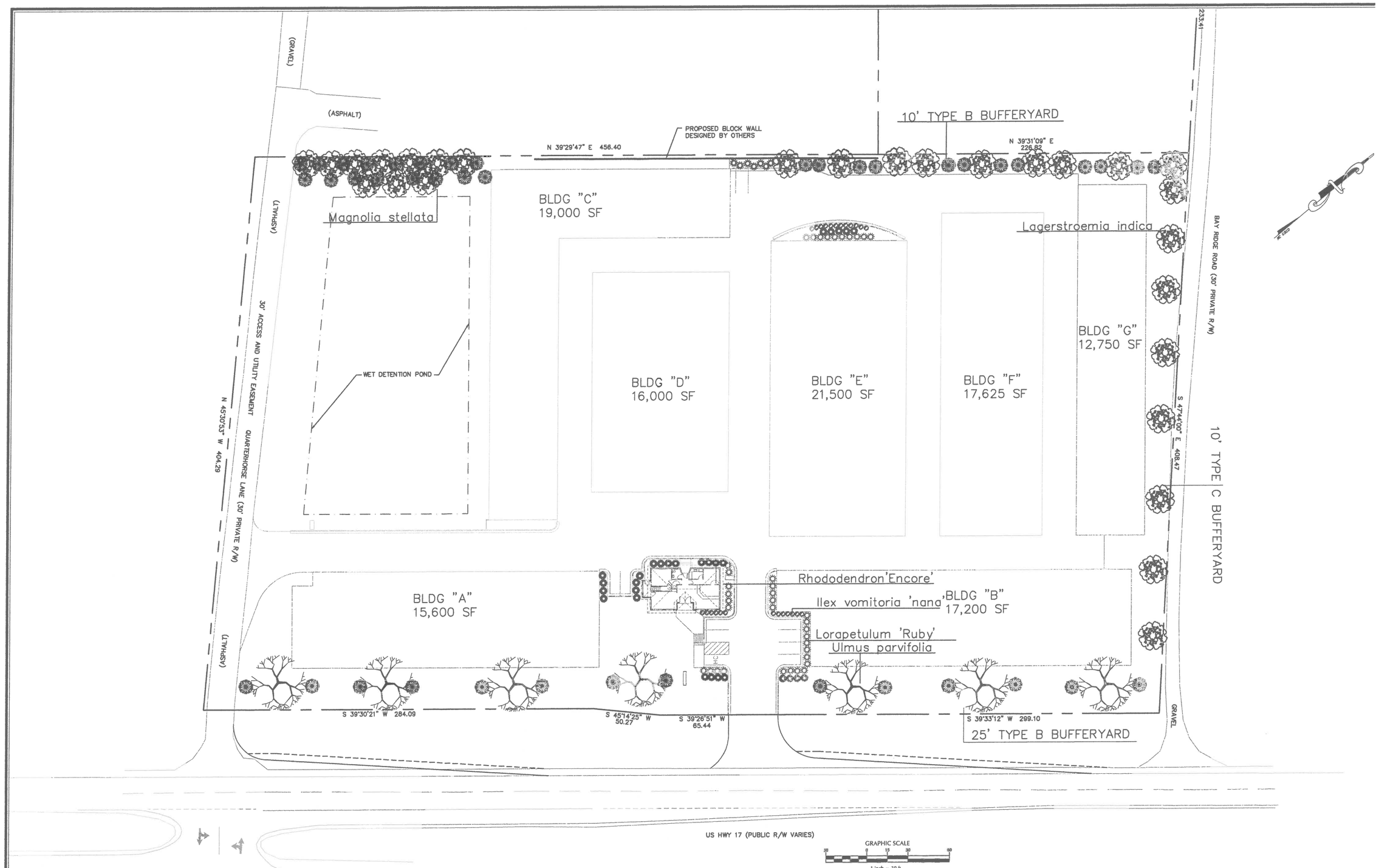

PRELIMINARY - DO NOT USE FOR CONSTRUCTION

No.	Revision	Date	By

Designer MNH	Scale AS SHOWN
Drawn By MNH	Date OCTOBER, 2017
Checked By MNH	Job No.

SLOOP POINT MINI-STORAGE

PENDER COUNTY NORTH CAROLINA

AJ MCGIRT LAND MANAGEMENT, LLC
P.O. BOX 15148
WILMINGTON, NC 28408

DONNA CLEMMONS
LANDSCAPE ARCHITECT ASLA
105 B CORAL DRIVE
WRIGHTSVILLE BEACH,NC 28480
910.612.9538

LANDSCAPE PLAN

L1

Plant Table

Quantity	Symbol	Scientific Name	Common Name	Planting Size
29		Rhododendron 'encore'	Encore azalea	3 gal
35		Lagerstroemia indica	Crape myrtle 'Celebrity'	14–16'
42		Magnolia stellata	Star magnolia	6–8'
7		Ulmus parvifolia	Chinese elm	2.5" caliper
37		Lorapetulum'Ruby'	Purple lorapetulum	3 gal
25		Ilex vomitoria'nana'	Dwarf yaupon holly	3 gal

OVERSEED ALL GRASS AREAS WITH COASTAL SEED MIX
27,584 s.f. of turf needed

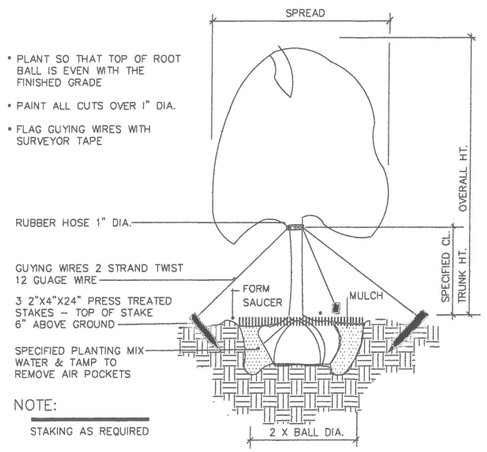

TREE PLANTING – GUY WIRES

SCALE: NOT TO SCALE

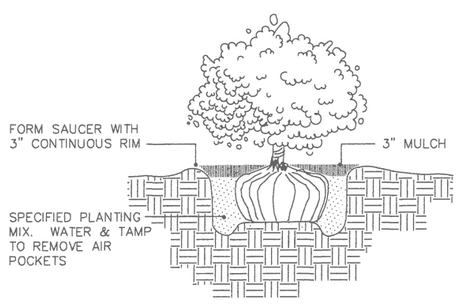

SHRUB PLANTING

SCALE: NOT TO SCALE

LANDSCAPE NOTES:

Contractor is responsible for identifying all underground utilities prior to construction.
Trees shall be located a minimum of 5' from water/'sewer connections.
All plant material shall meet the current version of American Nurserymens Association for plant materi
All trees and shrubs shall be mulched with a minimum of 3" clean pinestraw.
Any plant substitutions shall be made by the Landscape Architect.
The contractor shall be responsible for hand watering all trees and plants for a period of six months or until plants have rooted in.

25' Type A Bufferyard

1 canopy tree , two understory trees and 98% grass cover Req'd.'
7 canopy trees ,14 understory trees and 98% grass cover provided.

10' Type C Bufferyard

2 canopy trees and 98% grass cover with a 6' stockade wooden fence per 100L.F. re'qd..'
8 canopy trees and 98% grass cover with a 6' stockade wooden fence per 100L.F. provided.'

10' Type B Bufferyard

2 canopy trees and 98% grass cover per 100L.F. re'qd.'@ 651.82 L.F.
19 canopy trees ,28 understory trees and 98% grass cover per 100L.F. provided.'

No.	Revision	Date	By

Designer DDC	Scale AS SHOWN
Drawn By DDC	Date OCTOBER, 2017
Checked By DDC	Job No.

SLOOP POINT MINI-STORAGE
PENDER COUNTY NORTH CAROLINA

AJ MCGIRT LAND MANAGEMENT, LLC
P.O. BOX 15148
WILMINGTON, NC 28408

DONNA CLEMMONS
LANDSCAPE ARCHITECT ASLA
105 B CORAL DRIVE
WRIGHTSVILLE BEACH,NC 28480
910.612.9538

LANDSCAPE PLAN

L2