WARDS CORNER (556591)
BURGAW, NORTH CAROLINA
VoLTE WAVE 4 CONSTRUCTION DRAWINGS
190' MONOPOLE

CONSULTANT:
Edge Consulting Engineers, Inc.
624 WATER STREET
PRAIRIE DU SAC, WI 53578
608.644.1449 VOICE
608.644.1549 FAX
www.edgeconsult.com
LICENSE NO.: C-4515

CLIENT:
U.S. CELLULAR - OMAHA
10343 MILITARY AVENUE
OMAHA, NE 68134
PHONE: 402.515.4698

NORTH CAROLINA PROFESSIONAL SEAL 046428 ENGINEER ARLEN J. OSTRENG
12/3/2018

SITE LOCATION MAPS

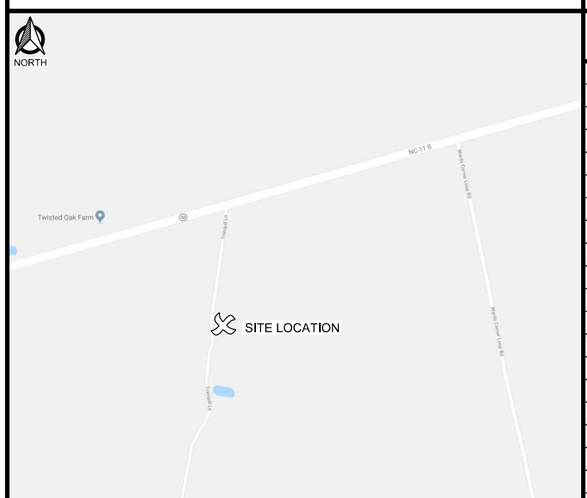

SHEET INDEX

NO.:	SHEET TITLE
G-001	TITLE SHEET
G-002	GENERAL SPECIFICATIONS
G-003	GENERAL SPECIFICATIONS
G-004	GENERAL SPECIFICATIONS
1	SURVEY*
C-101	SITE PLAN
C-102	ENLARGED SITE PLAN
C-501	CONSTRUCTION DETAILS
C-502	FENCE DETAILS
T-001	ANTENNA SPECIFICATIONS
T-002	EQUIPMENT SPECIFICATIONS
T-003	MICROWAVE DISH SPECIFICATIONS
T-201	SITE ELEVATION
T-301	ANTENNA AND EQUIPMENT CONFIGURATION
T-302	MICROWAVE DISH CONFIGURATION
T-501	INSTALLATION DETAILS
T-502	CABLE DETAILS
T-503	CABLE LABELING DETAILS
T-504	ICE BRIDGE DETAILS
T-505	PLUMBING DIAGRAM
T-506	MICROWAVE DISH INSTALLATION DETAILS
A-001	EQUIPMENT PAD NOTES
A-002	EQUIPMENT CABINET SPECIFICATIONS
A-101	EQUIPMENT PAD PLAN
A-102	EQUIPMENT PAD PLAN
A-201	EQUIPMENT PAD ELEVATIONS
A-501	EQUIPMENT PAD DETAILS
E-101	GROUNDING PLAN
E-501	GROUNDING DETAILS
E-502	GROUNDING DETAILS
E-503	UTILITY DETAILS
E-504	UTILITY RACK DETAILS

* PREPARED BY OTHERS

CONTRACTOR SHALL VERIFY ALL PLANS AND EXISTING DIMENSIONS/CONDITIONS ON SITE. IMMEDIATELY NOTIFY ENGINEER OF ANY DISCREPANCIES PRIOR TO PERFORMING ANY WORK OR BE RESPONSIBLE FOR THE SAME.

DIRECTORY

CLIENT:
U.S. CELLULAR - OMAHA
10343 MILITARY AVENUE
OMAHA, NE 68134
CONTACT: MICHELE ROTH
PHONE: 402.515.4698

ENGINEERING COMPANY:
EDGE CONSULTING ENGINEERS, INC.
624 WATER STREET
PRAIRIE DU SAC, WI 53578
PROJECT MANAGER: ANDREW BRADLEY
PHONE: 608.644.1449
FAX: 608.644.1549

SITE ACQUISITION:
MAGUIRE DEVELOPMENT CORP.
1125 CORPORATE DRIVE
GREENVILLE, NC 27858
CONTACT: MICHAEL DORAN
PHONE: (217) 622-1377
FAX: (217) 679-1176

SURVEYOR:
GARY S. MILLER & ASSOCIATES
1803 CHARLES BOULEVARD
GREENVILLE, N.C. 27858
CONTACT: GARY MILLER
PHONE: (252) 756-7878

PROJECT INFO

SITE LOCATION:
OFF OF TRANQUIL LN
BURGAW, NC 28425

E911 ADDRESS: TBD

SITE #: 556591

PROPERTY OWNER:
JANE HIGHSMITH
10280 NC HWY 53 W
BURGAW, NC 28425

SITE COORDINATES (PER SURVEY):
AT TOWER BASE
LAT: 34°-31'-40.73" N
LONG: 78°-05'-12.76" W
GROUND ELEVATION (NAVD 88): 54' AMSL

TAX KEY NUMBER:
2278-54-6803-0000

SCOPE OF WORK

PROJECT DESCRIPTION:
190' MONOPOLE
OUTDOOR LTE EQUIPMENT
LEASE AREA: 100' x 100'
FENCED AREA: 40' x 40'

MICROWAVE EQUIPMENT:
(1) 6' DIA. MICROWAVE DISH
(2) OUTDOOR UNIT (ODU)
(2) CNT-400 CABLE

LOADING TYPE:
PLUMBING DIAGRAM #43B
ERICSSON 2T2R B12

PROPOSED ANTENNAS:
(3) LTE PANEL ANTENNAS

PROPOSED RF EQUIPMENT:
(1) SURGE PROTECTOR DEVICE (SDP)
(3) REMOTE RADIO UNITS (RRU)

PROPOSED CABLING:
(1) 1-1/4" EUPEN HYBRID CABLE
(3) RET CABLES
(3) FIBER JUMPERS;
FROM RAYCAP SPD TO B5 REMOTE RADIO UNITS
(3) POWER JUMPERS;
FROM RAYCAP SPD TO B5 REMOTE RADIO UNITS
(6) 1/2" RF JUMPERS; FROM REMOTE RADIO UNITS TO ANTENNAS

UTILITY INFORMATION

ELECTRIC SERVICE PROVIDER: TBD

FIBER PROVIDER: N/A MICROWAVE BACKHAUL

ONE CALL SYSTEMS INTERNATIONAL

TO OBTAIN LOCATION OF PARTICIPANTS' UNDERGROUND FACILITIES BEFORE YOU DIG IN NORTH CAROLINA, CALL NORTH CAROLINA 811

TOLL FREE: 1-800-632-4949
FAX A LOCATE: 1-336-299-1914

NC STATUTE 87-122 REQUIRES MIN. OF 3 WORKING DAYS NOTICE BEFORE YOU EXCAVATE

SHEET TITLE:
TITLE SHEET
WARDS CORNER (556591)
BURGAW, NORTH CAROLINA

SUBMITTAL:

INT.	DATE:	DESCRIPTION:
TJT	10/17/2018	LEASE EXHIBIT
TJT	10/24/2018	PRELIM CDS
TJT	12/03/2018	FINAL CDS

CHECKED BY	AB
PLOT DATE	12/3/2018
PROJECT NUMBER	18686
SET TYPE	FINAL CDs
SHEET NUMBER	G-001

k:\18600\18686\CAD\Construction_Drawings\Plot\G-001.dgn

© EDGE CONSULTING ENGINEERS, INC

GENERAL REQUIREMENTS

1. SITE WORK SHALL BE COMPLETED IN ACCORDANCE WITH THESE PLANS AND SPECIFICATIONS (U.S. CELLULAR STANDARD PLANS AND SPECIFICATIONS) AND THE REFERENCED STANDARDS.

   A. ALL APPLICABLE LOCAL, STATE AND FEDERAL CODES AND REGULATIONS.

   B. UNIFORM BUILDING CODE (UBC) BUILDING OFFICIALS & CODE ADMINISTRATORS (BOCA) AS APPLICABLE.

   C. AMERICAN CONCRETE INSTITUTE (ACI).

   D. AMERICAN SOCIETY FOR TESTING AND MATERIALS (ASTM).

   E. ELECTRONICS INDUSTRIES ASSOCIATION STANDARDS (EIA/TIA-222-F) MOST CURRENT VERSION ADOPTED BY SUBJECT STATE.

   F. OCCUPATIONAL SAFETY AND HEALTH ADMINISTRATION (OSHA).

2. WHERE A CONFLICT OCCURS BETWEEN REFERENCED STANDARDS AND U.S. CELLULAR STANDARD PLANS AND SPECIFICATIONS, THE MORE STRINGENT STANDARD SHALL APPLY.

3. THE FACILITY IS AN UNOCCUPIED SPECIALIZED MOBILE RADIO FACILITY.

4. PLANS ARE NOT TO BE SCALED AND ARE INTENDED TO BE A DIAGRAMMATIC UTLINE ONLY, UNLESS NOTED OTHERWISE THE WORK SHALL INCLUDE FURNISHING MATERIALS, EQUIPMENT, AND LABOR NECESSARY TO COMPLETE ALL INSTALLATIONS AS INDICATED ON THE DRAWINGS.

5. PRIOR TO THE SUBMISSIONS OF THE BIDS, THE CONTRACTOR SHALL VISIT THE JOB SITE AND BECOME FAMILIAR WITH THE FIELD CONDITIONS. ANY DISCREPANCIES ARE TO BE BROUGHT TO THE ATTENTION OF THE OWNER'S REPRESENTATIVE.

6. THE CONTRACTOR SHALL RECEIVE IN WRITING, AUTHORIZATION TO PROCEED BEFORE STARTING WORK ON ANY ITEM NOT CLEARLY IDENTIFIED BY THE CONTRACT DOCUMENTS.

7. THE CONTRACTOR SHALL INSTALL ALL EQUIPMENT AND MATERIALS IN ACCORDANCE WITH MANUFACTURER'S RECOMMENDATIONS UNLESS SPECIFICALLY OTHERWISE NOTED.

8. THE CONTRACTOR SHALL SUPERVISE AND DIRECT THE WORK USING BEST SKILLED PERSONNEL. THE CONTRACTOR SHALL BE SOLELY RESPONSIBLE FOR ALL CONSTRUCTION MEANS, METHODS, TECHNIQUES, SEQUENCES AND PROCEDURES AND FOR COORDINATING ALL PORTIONS OF THE WORK UNDER THE CONTRACT INCLUDING CONTACT AND COORDINATION WITH THE LANDLORDS AUTHORIZED REPRESENTATIVE.

9. THE CONTRACTOR SHALL VERIFY ALL DIMENSIONS AND CONDITIONS OF THE SITE AND NOTIFY THE OWNER'S REPRESENTATIVE OF ANY DISCREPANCIES BEFORE STARTING ANY WORK.

10. WHEN CONTRACTOR'S ACTIVITIES IMPEDE OR OBSTRUCT TRAFFIC FLOW, CONTRACTOR SHALL PROVIDE TRAFFIC CONTROL DEVICES, SIGNS, AND FLAGMEN IN ACCORDANCE WITH PART VI OF THE MANUAL ON UNIFORM TRAFFIC CONTROL DEVICES (MUTCD) AS PUBLISHED BY THE FEDERAL HIGHWAY ADMINISTRATION.

11. THE CONTRACTOR SHALL COORDINATE SITE ACCESS AND SECURITY WITH THE PROPERTY OWNER AND U.S. CELLULAR PRIOR TO CONSTRUCTION.

12. THE CONTRACTOR SHALL MAKE NECESSARY PROVISIONS TO PROTECT EXISTING IMPROVEMENTS SUCH AS BUT NOT LIMITED TO, PAVING, CURBS, AGRICULTURAL CROPS, DRAIN TILE, FENCES, LANDSCAPING, GALVANIZED SURFACES, ETC. AND UPON COMPLETION OF WORK REPAIR ANY DAMAGE THAT OCCURRED DURING CONSTRUCTION.

13. THE LOCATIONS OF UTILITIES SHOWN ON THE PLAN ARE BASED ON EXISTING RECORDS, FIELD LOCATIONS OR OWNER SUPPLIED INFORMATION AND MAY NOT BE ACCURATE. THE CONTRACTOR SHALL MARK ALL PUBLIC & PRIVATE UTILITIES. THE CONTRACTOR SHALL CALL THE LOCAL "ONE CALL" PROVIDER A MINIMUM OF THREE BUSINESS DAYS PRIOR TO EXCAVATING TO ALLOW MEMBER UTILITIES TO LOCATE THEIR FACILITIES. THE PROPERTY OWNER SHALL BE NOTIFIED IN A SIMILAR FASHION TO ALLOW HIM TO LOCATE HIS PRIVATE UTILITIES.

14. WHEN EXCAVATING AROUND UTILITIES, THE CONTRACTOR SHALL USE REASONABLE CARE IN LOCATING AND PROTECTING UTILITIES. U.S. CELLULAR SHALL BE NOTIFIED IMMEDIATELY OF ANY CONFLICTS BETWEEN EXISTING UTILITIES AND PROPOSED CONSTRUCTION.

15. DAMAGE TO PUBLIC OR PRIVATE UTILITIES SHALL BE REPORTED TO U.S. CELLULAR AND THE OWNER OF THE UTILITY IMMEDIATELY. ANY DAMAGE RESULTING FROM CONTRACTOR'S NEGLIGENCE OR FAILURE TO ACT WITH DUE REGARD SHALL BE REPAIRED AT CONTRACTOR'S EXPENSE.

16. UNLESS OTHERWISE NOTED ON THE PLANS, CONTRACTOR SHALL ASSUME ALL SURFACE FEATURES SUCH AS BUILDINGS, PAVEMENTS, LANDSCAPING FEATURES AND PLANTS ARE TO BE SAVED AND PROTECTED FROM DAMAGE.

17. KEEP THE CONSTRUCTION SITE CLEAN, HAZARD FREE, AND DISPOSE OF ALL DIRT, DEBRIS, RUBBISH AND REMOVE EQUIPMENT NOT SPECIFIED AS REMAINING ON THE PROPERTY. LEAVE PREMISES IN CLEAN CONDITION AND FREE FROM PAINT SPOTS, DUST, OR SMUDGES OF ANY NATURE.

18. THE CONTRACTOR SHALL PROVIDE ON-SITE TRASH RECEPTACLES FOR COLLECTION OF NON-TOXIC DEBRIS. ALL TRASH SHALL BE COLLECTED ON A DAILY BASIS.

19. ALL TOXIC AND ENVIRONMENTALLY HAZARDOUS SUBSTANCES SHALL BE USED AND DISPOSED OF IN ACCORDANCE WITH MANUFACTURER SPECIFICATIONS. UNDER NO CIRCUMSTANCES SHALL RINSING OR DUMPING OF THESE SUBSTANCES OCCUR ON-SITE.

20. THE CONTRACTOR SHALL MAINTAIN AND SUPPLY U.S. CELLULAR WITH AS-BUILT PLANS UPON COMPLETION OF THE PROJECT.

21. MEANS AND METHODS OF CONSTRUCTION INCLUDING, BUT NOT LIMITED TO, THE DESIGN AND PLACEMENT OF FORMS AND SHORING ARE THE RESPONSIBILITY OF THE CONTRACTOR.

22. THE GENERAL CONTRACTOR SHALL COORDINATE/ASSIST DIFFERENT TRADE CONTRACTORS IN TERMS OF COORDINATION OF SITE ACCESS.

23. ALL ARCHITECTURAL, MECHANICAL & ELECTRICAL SYSTEM AND COMPONENTS IN THIS FACILITY SHALL BE INSTALLED TO RESIST WIND, ICE AND SNOW FORCES AS PER NATIONAL STANDARDS AND BUILDING CODES (LATEST ADOPTED EDITION).

24. U.S. CELLULAR WILL OBTAIN NECESSARY PERMITS AND LICENSES FROM THE FEDERAL COMMUNICATIONS COMMISSION (FCC) AND THE FEDERAL AVIATION ADMINISTRATION (FAA). UNLESS OTHERWISE NOTED IN THE PLANS OR SPECIAL PROVISIONS, CONTRACTOR SHALL BE RESPONSIBLE FOR OBTAINING AND PAYING FOR ALL OTHER PERMITS NECESSARY FOR CONSTRUCTION.

25. U.S. CELLULAR WILL ORDER AND PAY FOR ANY NECESSARY ELECTRIC AND TELEPHONE UTILITY INSTALLATIONS TO THE POINT OF TERMINATION AS SHOWN ON THE PROJECT PLANS. CONTRACTOR SHALL BE RESPONSIBLE FOR COORDINATION WITH UTILITIES.

26. U.S. CELLULAR WILL PROVIDE PRIMARY HORIZONTAL AND VERTICAL CONTROL FOR CONSTRUCTION. CONTRACTOR WILL BE RESPONSIBLE TO CORRECTLY TRANSFER LINE AND GRADE. THE CONTRACTOR SHALL PROVIDE ANY ADDITIONAL STAKING OR RE-STAKING.

27. U.S. CELLULAR MAY RETAIN THE SERVICES OF A TESTING LABORATORY TO PERFORM QUALITY ASSURANCE TESTING ON VARIOUS PORTIONS OF THE CONTRACTORS WORK. WHEN REQUESTED, THE CONTRACTOR SHALL INFORM THE TESTING LABORATORY AND ASSIST THEM IN COMPLETING TESTS.

28. THE CONTRACTOR SHALL PROVIDE ANY TEMPORARY UTILITIES OR FACILITIES IT DEEMS NECESSARY TO COMPLETE IT'S WORK. THIS INCLUDES, BUT IS NOT LIMITED TO WATER, SEWER, POWER, TELEPHONE, HEAT, LIGHTING OR SECURITY.

29. NOTIFY ENGINEER 2 DAYS IN ADVANCE OF INITIATING SITE CONSTRUCTION ACTIVITIES.

DEMOLITION

1. PERFORM DEMOLITION AND REMOVAL OF EXISTING MATERIALS OR STRUCTURES AS SHOWN ON THE PLANS AND AS SPECIFIED IN SPECIAL CONDITIONS. PROTECT EXISTING FACILITIES OR STRUCTURES THAT ARE TO REMAIN.

2. COMPLETE DEMOLITION IN A SYSTEMATIC MANNER BEGINNING AT THE HIGHEST LEVEL.

3. NEATLY SAW OR CUT JOINTS AT THE LIMITS OF REMOVAL; WHENEVER POSSIBLE LOCATE CUTS AT EXISTING JOINTS.

4. PATCH AND REPAIR ANY DAMAGED SURFACES OR STRUCTURAL MEMBERS AT THE LIMITS OF REMOVAL.

5. REMOVAL DEMOLITION DEBRIS FROM THE SITE ON A REGULAR BASIS. DISPOSE ALL DEBRIS OFFSITE IN ACCORDANCE WITH STATE AND LOCAL REGULATIONS. BURNING OF MATERIAL SHALL NOT BE ALLOWED UNLESS OTHERWISE NOTED IN THE PLANS OR SPECIAL PROVISIONS.

CLEARING AND GRUBBING

1. REMOVE TREES, STUMPS, SHRUBS, GRASS AND OTHER VEGETATION AS SHOWN ON THE PLANS TO ALLOW FOR CONSTRUCTION OF NEW CELLULAR FACILITIES.

2. WHEN POSSIBLE, NEATLY TRIM OR CUT BACK EXISTING TREES OR VEGETATION TO ALLOW FOR CONSTRUCTION OF NEW CELLULAR FACILITIES.

3. WHEN CLEARING TREES, PROTECT ALL SURROUNDING STRUCTURES, PAVEMENTS AND LANDSCAPING BY TOPPING, TRIMMING AND USING GUY LINES.

4. COMPLETELY REMOVE ALL STUMPS AND ROOTS. STUMPS AND ROOTS MAY BE REMOVED BY GRUBBING, CHIPPING OR GRINDING.

5. DISPOSE OF ALL DEBRIS OFFSITE IN ACCORDANCE WITH STATE AND LOCAL REGULATIONS. BURNING OF MATERIAL SHALL NOT BE ALLOWED UNLESS OTHERWISE NOTED IN THE PLANS OR SPECIAL PROVISIONS.

EARTHWORK

1. REMOVE TOPSOIL FROM BENEATH ALL PROPOSED ROADS, PARKING AREAS, BUILDINGS AND AREAS TO RECEIVE MORE THAN 6" OF FILL. STOCKPILE TOPSOIL FOR USE DURING RESTORATION.

2. ALL TREES DESIGNATED TO REMAIN SHALL BE PROTECTED DURING CONSTRUCTION BY A 5 FOOT HIGH TREE BARRIER UTILIZING WIRE FENCING, OR PROTECTIVE SAFETY NETTING.

3. GRADE AREAS IN ACCORDANCE WITH ELEVATIONS AND GRADES SHOWN ON THE PLANS OR AS NECESSARY IN GRADING TO PROVIDE DRAINAGE.

4. FILL MATERIAL USED IN GRADING OPERATIONS SHALL CONSIST OF EARTH WHICH IS FREE OF DEBRIS, BOULDERS OR ORGANIC MATERIAL. FILL SHALL BE PLACED IN 12" LIFTS AND COMPACTED TO 90% OF MODIFIED PROCTOR MAXIMUM DRY DENSITY.

5. ALL FILL SHALL BE TESTED FOR FIELD DENSITY. TESTS SHALL BE TAKEN IN EACH LIFT OF FILL AT LOCATIONS DESIGNATED BY THE OWNER'S REPRESENTATIVE.

6. SELECT GRANULAR FILL SHALL BE USED WHEN FILLING OR BACKFILLING BENEATH AND/OR AROUND ANY STRUCTURES, ROADS OR PARKING AREAS. SELECT FILL SHALL BE PLACED IN 9" LIFTS AND COMPACTED TO 95% OF THE MODIFIED PROCTOR MAXIMUM DRY DENSITY. SELECT GRANULAR FILL SHALL CONSIST OF SAND, GRAVEL OR MIXTURE OF SAND AND GRAVEL FREE OF ORGANIC MATERIAL. THE MATERIAL SHALL HAVE A 2" MAXIMUM SIZE, LESS THAN 10% PASSING NO. 200 SIEVE, A PLASTICITY INDEX OF 6 OR LESS, AND A UNIFORMITY COEFFICIENT OF 5 OR GREATER.

7. ALL DISTURBED AREAS SHALL BE RESTORED AS SOON AS POSSIBLE WITH 4" TOPSOIL, SEED, FERTILIZER AND MULCH. GRASS SEED SHALL BE A SUITABLE MIX CONTAINING BOTH ANNUAL AND PERENNIAL VARIETIES OF FESCURE, RYE AND BLUEGRASS. FERTILIZER SHALL CONTAIN A MINIMUM OF 10% EACH OF NITROGEN, PHOSPHORIC ACID AND POTASH. MULCH SHALL BE A STRAW OR HAY MIXTURE FREE OF NOXIOUS WEED SEEDS. APPLY SEED AND FERTILIZER AS RECOMMENDED BY MANUFACTURER. MULCH SHALL BE CRIMPED AFTER APPLICATION.

8. THE CONTRACTOR SHALL VERIFY, UPON COMPLETION OF DEVELOPMENT, THE SITE IS PROPERLY STABILIZED AND ALL INDICATED SWALES AND STORMWATER FACILITIES ARE CONSTRUCTED AS INDICATED ON THE PLANS.

9. TOWER, TOWER FOUNDATIONS, SLABS, MODULAR BUILDINGS, AND ELECTRICAL AND MECHANICAL FEATURES ARE TO BE DESIGNED AND SPECIFIED BY OTHERS.

EROSION CONTROL

1. CONTRACTOR SHALL PROVIDE EROSION CONTROL MEASURES IN ACCORDANCE WITH THE MOST STRINGENT OF: PROJECT PLANS, SPECIAL PROVISIONS, APPLICABLE STATE DEPARTMENT OF NATURAL RESOURCES OR LOCAL ORDINANCES.

2. ESTABLISH EROSION CONTROL MEASURES PRIOR TO STARTING CONSTRUCTION AND MAINTAIN THROUGHOUT CONSTRUCTION. INSPECT EROSION CONTROL MEASURES FOLLOWING EACH RAINFALL EVENT AND REPAIR AS NECESSARY.

3. SEDIMENTATION CONTROL SHALL BE ACCOMPLISHED DURING CONSTRUCTION THROUGH THE USE OF SILT FENCING PLACED AS SHOWN ON THE ATTACHED PLAN. THE CONTROL DEVICES SHALL BE SET AT THE ONSET OF SITE GRADING TO PREVENT SILTING OF THE EXISTING STORMWATER FACILITIES.

ROAD AND PARKING AREA CONSTRUCTION

1. PREPARE SUBGRADE FOR ROADS AND PARKING AREAS IN ACCORDANCE WITH "EARTHWORK" SECTION.

2. PROOF ROLL ROAD TO IDENTIFY UNSUITABLE MATERIALS. EXCAVATE UNSUITABLE MATERIAL AND DISPOSE OFFSITE. BACKFILL UNDERCUT EXCAVATION USING 3" BREAKER RUN MATERIAL. BREAKER RUN MATERIAL SHALL BE CRUSHED STONE MEETING THE FOLLOWING GRADATION:

SIEVE SIZE	% WEIGHT PASSING
3"	100
1-1/2"	0-50
3/4"	0-20
#200	0-10

3. PLACE CRUSHED AGGREGATE BASE COURSE IN MAXIMUM OF 6" THICK LIFTS IN ACCORDANCE WITH DETAIL DRAWINGS. MOISTURE CONDITION BASE COURSE AS NECESSARY TO ACHIEVE COMPACTION. BASE COURSE SHALL BE COMPACTED TO 95% OF THE MODIFIED PROCTOR MAXIMUM DRY DENSITY. BASE COURSE MATERIAL SHALL MEET THE FOLLOWING REQUIREMENTS:

   3" BASE COURSE

SIEVE SIZE	% WEIGHT PASSING
3"	100
2-1/2"	25-60
3/4"	0-20
3/8"	0-5

   1-1/2" BASE COURSE

1-1/2"	100
1"	70-100
3/4"	55-95
3/8"	30-65
#4	25-55
#10	15-40
#200	0-10

4. PLACE BASE COURSE WITH CROWN OR UNIFORM SLOPE AS NECESSARY TO PROVIDE DRAINAGE FROM THE SITE.

5. GEOTEXTILE FABRIC SHALL BE USED IN THE EVENT OF UNSTABLE SOIL CONDITIONS. VERIFICATION OF SUCH CONDITIONS IS THE RESPONSIBILITY OF THE CONTRACTOR.

CONSULTANT:

Edge
Consulting Engineers, Inc.
624 WATER STREET
PRAIRIE DU SAC, WI 53578
608.644.1449 VOICE
608.644.1549 FAX
www.edgeconsult.com
LICENSE NO.: C-4515

CLIENT:

U.S. Cellular
U.S. CELLULAR - OMAHA
10343 MILITARY AVENUE
OMAHA, NE 68134
PHONE: 402.515.4698

NORTH CAROLINA PROFESSIONAL SEAL 046428 ENGINEER ARLEN J. OSTRENG
12/3/2018

SHEET TITLE:

GENERAL SPECIFICATIONS

WARDS CORNER (556591)
BURGAW, NORTH CAROLINA

SUBMITTAL:

INT.	DATE:	DESCRIPTION:
TJT	10/17/2018	LEASE EXHIBIT
TJT	10/24/2018	PRELIM CDS
TJT	12/03/2018	FINAL CDS

CHECKED BY	AB
PLOT DATE	12/3/2018
PROJECT NUMBER	18686
SET TYPE	FINAL CDs
SHEET NUMBER	G-002

I:\18600\18686\CAD\Construction_Drawings\Plot\G-002.dgn

© EDGE CONSULTING ENGINEERS, INC

CONCRETE AND STEEL REINFORCEMENT

1. CONCRETE SHALL BE MIXED AND DELIVERED IN ACCORDANCE WITH ASTM C94. CONCRETE SHALL BE 6 BAG MIX HAVING A 28 DAY COMPRESSIVE STRENGTH OF 4000 PSI, MAXIMUM AGGREGATE SIZE OF 1", MAXIMUM WATER CEMENT RATIO OF 0.45, AIR ENTRAINMENT OF 6% +/- 1%, AND SLUMP OF 3" +/- 1". DEVIATIONS FROM THE MIX MUST BE APPROVED BY U.S. CELLULAR PRIOR TO USE.

2. CONCRETE CONSTRUCTION SHALL BE COMPLETED IN ACCORDANCE WITH THE MOST STRINGENT OF: PROJECT PLANS, SPECIAL PROVISIONS, OR THE AMERICAN CONCRETE INSTITUTE (ACI) PUBLICATIONS. CONCRETE WORK FOR TOWER FOUNDATIONS SHALL BE COMPLETED IN ACCORDANCE WITH PLANS AND SPECIFICATIONS PROVIDED BY THE TOWER VENDOR.

3. FORM MATERIALS WILL COMPLY WITH ACI 301. PLYWOOD FORMS SHALL BE APA B-B PLYFORM CLASS I SOUND SHEETS. LUMBER SHALL BE SPRUCE-PINE-FIR SPECIES #2 OR BETTER GRADE. TUBULAR COLUMN FORMS MAY BE SPIRALLY WOUND LAMINATED FIBER MATERIAL. FORM TIES SHALL BE REMOVABLE OR SNAP-OFF METAL TYPE.

4. CONCRETE SHALL BE MADE OF CEMENT MEETING THE REQUIREMENTS OF ASTM C150, NORMAL, TYPE I PORTLAND. FINE AND COARSE AGGREGATES FOR CONCRETE SHALL MEET THE REQUIREMENTS OF ASTM C33.

5. PLACE, SUPPORT AND SECURE REINFORCEMENT STEEL AT LOCATIONS SHOWN ON PLANS. REINFORCING STEEL SHALL BE PLACED IN ACCORDANCE WITH ACI 315. REBAR YIELD STRENGTH = 60,000 PSI.

6. AIR ENTRAINING ADMIXTURES SHALL MEET THE REQUIREMENTS OF ASTM C260; WATER REDUCING ADMIXTURES SHALL MEET THE REQUIREMENTS OF ASTM C494, TYPE A. ALL OTHER ADMIXTURES ARE PROHIBITED WITHOUT PRIOR APPROVAL BY U.S. CELLULAR.

7. VAPOR BARRIER SHALL BE 6 MIL THICK POLYETHYLENE, MEETING THE REQUIREMENTS OF ASTM D2103.

8. CURING COMPOUND SHALL MEET THE REQUIREMENTS OF ASTM C309.

9. WELDED WIRE FABRIC SHALL CONFORM TO ASTM A185.

10. ALL CONSTRUCTION AND EXPANSION JOINTS SHALL BE INSTALLED PER THE DRAWINGS.

11. ALL EXPOSED CORNERS OF CONCRETE WORK SHALL BE CHAMFERED 3/4 " UNLESS NOTED OTHERWISE.

12. PLACE, SUPPORT AND SECURE REINFORCEMENT STEEL AT LOCATIONS SHOWN ON PLANS. REINFORCING STEEL SHALL BE PLACED IN ACCORDANCE WITH ACI 315.

13. ALL FORM WORK SHALL BE RIGID, TIGHT, LEVEL, PLUMB AND SUFFICIENTLY SHORED TO RESIST CONSTRUCTION LOAD CONDITIONS. COAT FORMS WITH RELEASE AGENT PRIOR TO PLACING REINFORCING STEEL.

14. PREPARE SUBGRADE FOR CONCRETE IN ACCORDANCE WITH PROJECT PLANS AND SPECIAL PROVISION. DO NOT PLACE CONCRETE ON FROZEN SUBGRADE.

15. PROVIDE U.S. CELLULAR A MINIMUM OF 48 HRS. NOTICE PRIOR TO PLACING CONCRETE TO ALLOW FOR INSPECTION AND SCHEDULING OF TESTING.

16. UTILIZE CHUTES, TROUGHS OR CONVEYORS TO PLACE CONCRETE SO THAT HANDLING OF CONCRETE IS MINIMIZED. AVOID SEGREGATION OF THE AGGREGATE AND DISTURBING REINFORCING STEEL.

17. UNIFORMLY CONSOLIDATE CONCRETE USING HAND TOOLS OR MECHANICAL VIBRATORS. THOROUGHLY CONSOLIDATE EACH LAYER PRIOR TO PLACING SUBSEQUENT LAYERS.

18. WHEN PLACING OPERATIONS ARE TEMPORARILY SUSPENDED, THE UNFINISHED FACE OF THE POUR SHALL BE COVERED WITH WET BURLAP UNTIL PLACING OPERATIONS ARE RESUMED. WHEN PLACING OPERATIONS ARE SUSPENDED FOR MORE THAN 30 MINUTES, PROVIDE AN BONDING AGENT TO CONSTRUCTION JOINT.

19. TROWEL FINISH SURFACES UNLESS OTHERWISE DIRECTED ON THE PLANS.

20. AFTER FINAL FINISHING, PROVIDE POLYETHYLENE VAPOR BARRIER OR CURING COMPOUND TO MAINTAIN MOISTURE AND TEMPERATURE OF CONCRETE.

21. IN EXTREME WEATHER PLACE AND CURE CONCRETE IN ACCORDANCE WITH EITHER ACI 306R-89 FOR COLD WEATHER OR ACI 305R-89 FOR HOT WEATHER.

22. WELDING OF REINFORCING STEEL IS PROHIBITED.

23. REMOVE FORMS IN A MANNER THAT DOES NOT DAMAGE THE CONCRETE. FILL AND PATCH POCKETS OR HOLES ON EXPOSED SURFACES USING MORTAR MIXTURE.

24. PROVIDE TEST CYLINDERS AS FOLLOWS:

    A. EQUIPMENT ENCLOSURE:
    1 CYLINDER AT 7 DAYS.
    1 CYLINDER AT 14 DAYS.
    2 CYLINDERS AT 28 DAYS.

25. NOTIFY ENGINEER 48 HOURS IN ADVANCE OF TOWER FOUNDATION INSTALLATION.

26. REFER TO TOWER MANUFACTURER SPECIFICATIONS REGARDING FOUNDATION REQUIREMENTS.

CHAINLINK FENCING

1.0 SCOPE:

1.1 THIS SECTION COVERS THE REQUIREMENTS FOR THE MATERIALS AND THE CONSTRUCTION OF SITE FENCING. SEE SITE PLAN AND DRAWINGS FOR DETAILS.

2.0 SPECIAL REQUIREMENTS:

2.1 ALL WIRE, FABRIC, FITTINGS, HARDWARE AND STEEL MEMBERS USED FOR SITE AREA FENCING SHALL BE HOT DIPPED GALVANIZED (ASTM A153) OR OTHER APPROVED NON CORROSIVE MATERIAL AND CONFORM TO FEDERAL SPEC RR-F-191G (1-25-74).

2.2 ALL NON-CORROSIVE MATERIAL SHALL BE PRE-APPROVED BY THE PROJECT MANAGER.

2.3 ANY DAMAGE TO GALVANIZING OR NON-CORROSIVE COATING DURING CONSTRUCTION SHALL BE REPAIRED ACCORDING TO MANUFACTURER'S RECOMMENDED METHODS.

3.0 GATE:

3.1 LOCATION OF GATE SHALL CONFORM TO THE SITE PLAN.

3.2 ALL JOINTS BETWEEN TUBULAR GATE MEMBERS SHALL BE WELDED OR HEAVY FITTINGS PROVIDING RIGID AND WATERTIGHT CONNECTIONS.

3.3 GATE HINGES SHALL PROVIDE FOR 180 DEGREE RADIUS GATE SWING. ALL HINGE NUTS SHALL BE ON THE INSIDE AND DOUBLE-NUT TO DETER UNAUTHORIZED ENTRY.

3.4 BARBED WIRE GUARD SHALL BE INSTALLED ON TOP OF GATES. ADEQUATE CLEARANCE SHALL BE MAINTAINED TO ALLOW GATE OPERATION.

3.5 GATE SHALL BE INSTALLED PLUMB AND SHALL OPEN AND CLOSE FREELY.

3.6 GATE POSTS SHALL NOT BE SHARED AS A CORNER POST.

4.0 FENCE POSTS:

4.1 LOCATION OF CORNER POSTS SHALL BE DETERMINED FROM STAKES AND PROPERTY PINS INSTALLED BY THE REGISTERED LAND SURVEYOR UNDER CONTRACT FOR THE PROJECT. IF THE STAKES ARE NOT PRESENT OR DO NOT CONFORM TO THE SITE PLAN, CONSULT WITH THE PROJECT MANAGER.

4.2 CORNER POSTS SHALL BE SET WITHIN ONE INCH (1") OF DIMENSIONS INDICATED ON THE SITE PLAN.

4.3 FENCE POSTS SHALL BE VERTICALLY PLUMB IN ALL PLANES WITHIN 1/2 INCH (1/2").

4.4 LINE POSTS BETWEEN CORNER AND GATE POSTS SHALL BE EQUALLY SPACED WITH A TEN FOOT (10') MAXIMUM SPACING. GATE POST LOCATIONS SHALL BE IN ACCORDANCE WITH SITE PLAN AND SHALL BE VERIFIED WITH THE PROJECT MANAGER.

4.5 ALL FOUR CORNERS POSTS AND BOTH GATE POSTS SHALL BE CONNECTED TO THE SITE GROUNDING SYSTEM (REFER TO GROUNDING SYSTEM STANDARD).

4.6 FENCE POST OUTSIDE DIAMETER (O.D.) ARE MINIMUM SPECIFICATIONS. LARGER SIZES MAY BE SUBSTITUTED WITH APPROVAL FROM PROJECT MANAGER.

5.0 FABRIC:

5.1 FABRIC SHALL BE TENSIONED PER MANUFACTURER'S RECOMMENDATIONS TO PRESENT A NEAT APPEARANCE.

5.2 FABRIC SHALL BE SECURED AT CORNER AND GATE POSTS USING STRETCHER BARS AND TENSION BAND CLIPS.

5.3 FABRIC SHALL BE SECURED TO THE TOP RAIL AND BRACE RODS USING TIE CLIPS.

THIS SPACE INTENTIONALLY LEFT BLANK

CONSULTANT:

Edge
Consulting Engineers, Inc.
624 WATER STREET
PRAIRIE DU SAC, WI 53578
608.644.1449 VOICE
608.644.1549 FAX
www.edgeconsult.com
LICENSE NO.: C-4515

CLIENT:

U.S. Cellular
U.S. CELLULAR - OMAHA
10343 MILITARY AVENUE
OMAHA, NE 68134
PHONE: 402.515.4698

NORTH CAROLINA PROFESSIONAL SEAL 046428 ENGINEER ARLEN J. OSTRENG
12/3/2018

GENERAL SPECIFICATIONS

WARDS CORNER (556591)
BURGAW, NORTH CAROLINA

SHEET TITLE:

SUBMITTAL:

INT.	DATE:	DESCRIPTION:
TJT	10/17/2018	LEASE EXHIBIT
TJT	10/24/2018	PRELIM CDS
TJT	12/03/2018	FINAL CDS

CHECKED BY	AB
PLOT DATE	12/3/2018
PROJECT NUMBER	18686
SET TYPE	FINAL CDs
SHEET NUMBER	G-003

K:\18600\18686\CAD\Construction_Drawings\Plot\G-003.dgn

© EDGE CONSULTING ENGINEERS, INC

ELECTRICAL NOTES

1.0 GENERAL

1.1 CONTRACTOR SHALL PROVIDE ALL LABOR, MATERIALS, INSURANCE, EQUIPMENT, INSTALLATION, CONSTRUCTION TOOLS, TRANSPORTATION, ETC. FOR A COMPLETE AND PROPERLY OPERATING SYSTEM ENERGIZED THROUGHOUT AS INDICATED ON DRAWINGS, AS SPECIFIED HEREIN AND/OR AS OTHERWISE REQUIRED.

1.2 CONTRACTOR IS TO COORDINATE WITH UTILITY COMPANY FOR CONNECTION OF PERMANENT POWER TO THE SITE.

1.3 CONTRACTOR SHALL OBTAIN ALL NECESSARY BUILDING PERMITS, INSPECTIONS AND APPROVALS, AND PAY ALL REQUIRED FEES PURSUANT TO THE WORK.

1.4 ALL WORK SHALL BE IN STRICT ACCORDANCE WITH THE LATEST VERSION OF THE NATIONAL ELECTRICAL CODE AND ANY APPLICABLE NATIONAL, STATE AND LOCAL CODES. ALL COMPONENTS SHALL BE U.L. APPROVED.

1.5 CONTRACTOR SHALL BEFORE SUBMITTING HIS BID, VISIT THE SITE OF THE PROJECT AND BECOME FAMILIAR WITH THE CONDITIONS. NO ALLOWANCE WILL BE MADE FOR EXISTING CONDITIONS OR FAILURE OF THE CONTRACTOR TO OBSERVE THEM.

1.6 EXACT LOCATION OF ALL EQUIPMENT SHALL BE COORDINATED WITH OWNER AND OTHER TRADES.

1.7 CONTRACTOR SHALL PROVIDE ALL VERIFICATION OBSERVATION TESTS AND EXAMINE ALL WORK PRIOR TO ORDERING THE ELECTRICAL EQUIPMENT AND THE ACTUAL CONSTRUCTION. CONTRACTOR SHALL ISSUE A WRITTEN NOTICE OF ALL FINDINGS TO THE ARCHITECT/ENGINEER LISTING ALL MALFUNCTIONS, FAULTY EQUIPMENT AND DISCREPANCIES.

1.8 ALL MATERIALS AND EQUIPMENT SHALL BE NEW AND IN SAFE CONDITION WHEN INSTALLED AND SHALL BE OF THE BEST GRADE AND OF THE SAME MANUFACTURER THROUGHOUT FOR EACH CLASS OR GROUP OF EQUIPMENT (SEE NOTE 1.7 FOR EXCEPTIONS). MATERIALS SHALL MEET WITH APPROVAL OF THE DIVISION OF INDUSTRIAL SAFETY AND ALL GOVERNING BODIES HAVING JURISDICTION. MATERIALS SHALL BE MANUFACTURED IN ACCORDANCE WITH APPLICABLE STANDARDS ESTABLISHED BY ANSI, NEMA, NBFU AND "UL" LISTED.

1.9 WHERE EQUIPMENT IS SPECIFIED BY MANUFACTURER AND TYPE, SUBSTITUTION SHALL ONLY BE MADE WITH THE APPROVAL OF THE ENGINEER. THE CONTRACTOR SHALL SUBMIT DETAILS OF PROPOSED MATERIALS, REASON FOR CHANGE AND CHANGE IN CONTRACT AMOUNT.

1.10 EACH CONDUCTOR OF EVERY SYSTEM SHALL BE PERMANENTLY LABELED WITH ENGRAVED PLASTIC LABELS FOR EACH PANELBOARD, PULL BOX, J-BOX, SWITCH BOX, ETC. IN COMPLIANCE WITH OCCUPATIONAL SAFETY AND HEALTH ACT (OSHA)

1.11 THESE PLANS ARE DIAGRAMMATIC ONLY AND ARE TO BE FOLLOWED AS CLOSELY AS POSSIBLE.

1.12 THE TEMPERATURE RATING ASSOCIATED WITH THE AMPACITY OF A CONDUCTOR SHALL BE SO SELECTED AND COORDINATED AS TO NOT EXCEED THE LOWEST TEMPERATURE RATING OF ANY CONNECTED TERMINATION, CONDUCTOR, OR DEVICE.

1.13 ALL ENCLOSURES CONTAINING THE SERVICE CONDUCTORS-SERVICE RACEWAY, CABLE ARMOR, BOXES, FITTINGS, CABINETS MUST BE EFFECTIVELY BONDED TOGETHER.

1.14 ALL UNDERGROUND CONDUIT SHALL BE PVC SCHEDULE 40 UNLESS OTHERWISE SPECIFIED, WITH UV PROTECTION (UNLESS NOTED OTHERWISE) AT A MINIMUM DEPTH SPECIFIED BY NATIONAL STATE AND LOCAL CODES. IT IS REQUIRED AND WILL BE THE RESPONSIBILITY OF THE ELECTRICAL CONTRACTOR TO NOTIFY THE DIGGER HOTLINE OR OTHER SUCH NOTIFYING AGENCY PRIOR TO THE START OF DIGGING, TRENCHING, EXCAVATION, OR OTHER SUCH EARTH REMOVAL; SEE G-001 FOR NOTIFICATION REQUIREMENTS.

1.15 THE UNDERGROUND SERVICE ENTRANCE WORK MUST BE CONSTRUCTED ACCORDING TO THE LOCAL BUILDING CODE, NEC & UTILITY STANDARDS. THE ELECTRICAL CONTRACTOR SHALL COORDINATE WITH THE ELECTRICAL UTILITY BEFORE QUOTING AND DURING THE CONSTRUCTION.

ELECTRICAL NOTES (CONTINUED)

2.0 MATERIALS, ELECTRICAL WIRING AND RACEWAYS

2.1 ALL CIRCUIT BREAKERS, FUSES, CONDUCTORS AND ELECTRICAL EQUIPMENT SHALL HAVE AN INTERRUPTING SHORT CIRCUIT TO WHICH THEY MAY BE SUBJECTED AND A MINIMUM OF 10,000 AIC RATING UNLESS SPECIFIED OTHERWISE.

2.2 PLASTIC PLATES FOR ALL SWITCHES, RECEPTACLES, TELEPHONE AND BLANKED OUTLETS SHALL HAVE ENGRAVED LETTERING WHERE INDICATED ON THE DRAWINGS. WEATHERPROOF RECEPTACLES SHALL HAVE SIERRA "WPD 8" LIFT COVER PLATES.

2.3 METER SOCKET AMPERAGE, VOLTAGE AND NUMBER OF PHASES SHALL BE AS NOTED ON THE DRAWINGS AND MANUFACTURED BY SQUARE "D" COMPANY OR AN APPROVED EQUAL.

2.4 INSTALLATION OF RIGID METAL CONDUIT SHALL COMPLY WITH THE APPLICABLE PROVISIONS OF ARTICLES 300 & 346-NEC. SHALL BE UL APPROVED.

2.5 INSTALLATION OF ELECTRICAL METALLIC TUBING (EMT) SHALL COMPLY WITH THE APPLICABLE PROVISIONS OF ARTICLES 300 & 348-NEC. SHALL BE U.L. APPROVED.

2.6 INSTALLATION OF INTERMEDIATE METAL CONDUIT (IMC) SHALL COMPLY WITH THE APPLICABLE PROVISIONS OF ARTICLES 300 & 348-NEC. SHALL BE UL APPROVED.

2.7 PLASTIC CONDUIT SHALL BE SCHEDULE 40, HIGH IMPACT, POLYVINYL CHLORIDE AND SHALL BE USED WITH UNTHREADED SOLVENT CEMENT PLASTIC CONDUIT FITTINGS. COUPLINGS SHALL HAVE A CENTER STOP TO TYPE ENSURE PROPER SEATING. CONDUIT SHALL BE MANUFACTURED BY CARLON OR ACCEPTABLE EQUAL SHALL BE IN COMPLIANCE WITH ART 300 & 347-NEC, UL APPROVED.

2.8 ALL WIRING OF ALL KINDS MUST BE INSTALLED IN CONDUIT, UNLESS OTHERWISE NOTED OR APPROVED BY THE ELECTRICAL ENGINEER.

2.9 ALL WIRING SHALL BE IN ACCORDANCE WITH THE (NEC) NATIONAL ELECTRICAL CODE OR AS INDICATED ON PLANS.

2.10 RACEWAYS SHALL BE STEEL GALVANIZED AND/OR PAINTED, WITH SIZE AS SPECIFIED AND IN ACCORDANCE WITH THE (NEC) NATIONAL ELECTRICAL CODE UNLESS OTHERWISE NOTED ON PLANS. ALL RACEWAYS SHALL BE APPROVED PRIOR TO INSTALLATION.

2.11 JUNCTION BOXES OR PULL BOXES SHALL MEET (NEC) NATIONAL ELECTRICAL CODE STANDARDS AND AS APPROVED FOR INSTALLATION OF RACEWAYS AND WIRING.

2.12 THE RACEWAY AND WIRING INSTALLATION SHALL BE GROUNDED PERMANENTLY AND EFFECTIVELY IN ACCORDANCE WITH ARTICLE 250 OF THE (NEC) NATIONAL ELECTRICAL CODE.

2.13 THE CONTRACTOR SHALL BE AWARE THAT ALL STATE AND LOCAL CODES SHALL APPLY TO THIS INSTALLATION AND MUST BE ADHERED TO.

3.0 SCOPE OF WORK

3.1 THE CONTRACTOR SHALL PROVIDE ALL ELECTRICAL WIRING AND EQUIPMENT UNLESS OTHERWISE INDICATED. MAIN COMPONENTS ARE AS FOLLOWS:
A. PROVIDE ELECTRICAL SERVICE AS INDICATED ON THE DRAWINGS.
B. PROVIDE FIBER CONDUIT WITH PULL WIRE AS INDICATED HEREIN AND ON DRAWINGS.
C. COORDINATE ELECTRICAL SERVICE WITH LOCAL POWER COMPANY.
E. COORDINATE FIBER SERVICE WITH LOCAL FIBER COMPANY.
F. INSTALL WIRE AND CONDUIT AS INDICATED. PROVIDE CABLE SUPPORTS AS INDICATED.
G. PROVIDE GROUNDING AS INDICATED.

3.2 ONE SET OF COMPLETE ELECTRICAL "AS INSTALLED" OR "AS-BUILT" DRAWINGS AT THE COMPLETION OF THE JOB SHOWING ACTUAL DIMENSIONS, ROUTINGS AND CIRCUITS SHALL BE PROVIDED TO CLIENT. ALL BROCHURES, OPERATING MANUALS, CATALOGS, SHOP DRAWINGS, ETC. SHALL BE TURNED OVER TO CLIENT AT JOB COMPLETION.

3.3 PATCH, REPAIR AND PAINT ANY AREA THAT HAS BEEN DAMAGED IN THE COURSE OF ELECTRICAL WORK.

3.4 UPON COMPLETION OF WORK, CONDUIT CONTINUITY, SHORT CIRCUIT, AND GROUNDING FALL POTENTIAL TEST WILL BE MADE FOR APPROVAL. SUBMIT TEST REPORTS TO CLIENT. CLEAN PREMISES OF ALL DEBRIS RESULTING FROM WORK AND LEAVE IN A COMPLETE AND UNDAMAGED CONDITION.

3.5 THE COMPLETE JOB SHALL BE GUARANTEED FOR A PERIOD OF ONE (1) YEAR AFTER THE DATE OF SITE ACCEPTANCE BY CLIENT. ANY WORK MATERIAL OR EQUIPMENT FOUND TO BE FAULTY DURING THAT PERIOD SHALL BE CORRECTED AT ONCE, UPON WRITTEN NOTIFICATION, AND AT THE EXPENSE OF THE CONTRACTOR.

3.6 THE ELECTRICAL CONTRACTOR SHALL VERIFY THE ELECTRICAL EQUIPMENT PROVIDED BY CLIENT'S SUPPLIERS.

THIS SPACE INTENTIONALLY LEFT BLANK

CONSULTANT:
Edge Consulting Engineers, Inc.
624 WATER STREET
PRAIRIE DU SAC, WI 53578
608.644.1449 VOICE
608.644.1549 FAX
www.edgeconsult.com
LICENSE NO.: C-4515

CLIENT:
U.S. Cellular
U.S. CELLULAR - OMAHA
10343 MILITARY AVENUE
OMAHA, NE 68134
PHONE: 402.515.4698

NORTH CAROLINA PROFESSIONAL SEAL 046428 ENGINEER ARLEN J. OSTRENG
12/3/2018

SHEET TITLE:
GENERAL SPECIFICATIONS
WARDS CORNER (556591)
BURGAW, NORTH CAROLINA

SUBMITTAL:

INT.	DATE:	DESCRIPTION:
TJT	10/17/2018	LEASE EXHIBIT
TJT	10/24/2018	PRELIM CDS
TJT	12/03/2018	FINAL CDS

CHECKED BY	AB
PLOT DATE	12/3/2018
PROJECT NUMBER	18686
SET TYPE	FINAL CDs
SHEET NUMBER	G-004

k:\18600\18686\CAD\Construction_Drawings\Plot\G-004.dgn

© EDGE CONSULTING ENGINEERS, INC.

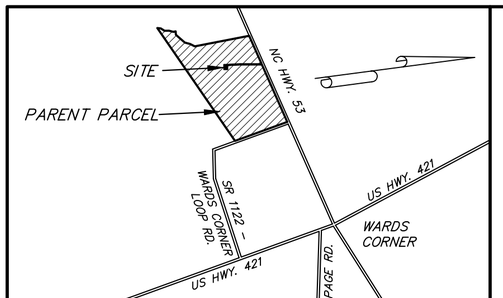

VICINITY MAP & PARENT PARCEL NO SCALE

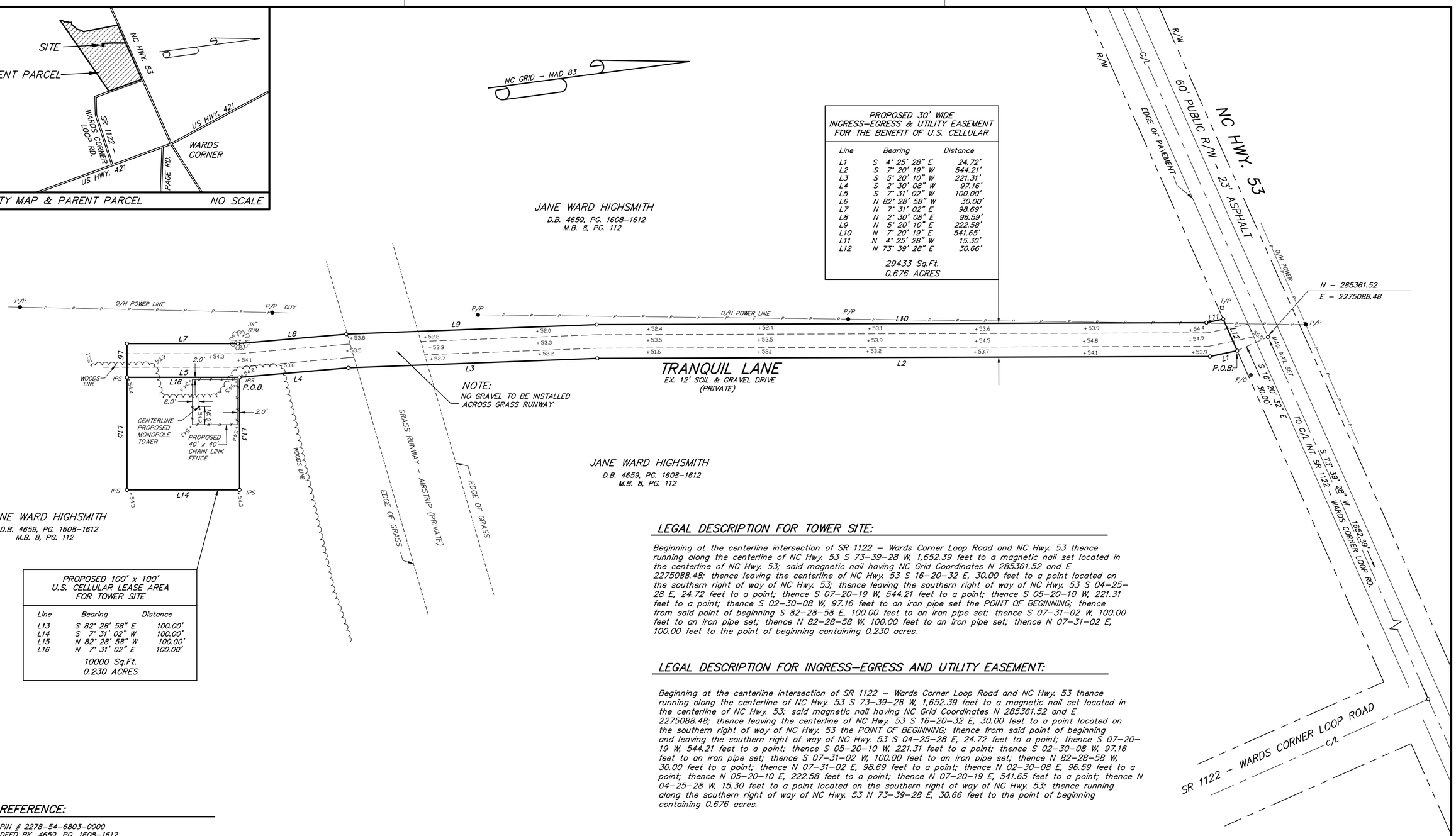

PROPOSED 30' WIDE INGRESS–EGRESS & UTILITY EASEMENT FOR THE BENEFIT OF U.S. CELLULAR		
Line	Bearing	Distance
L1	S 4° 25' 28" E	24.72'
L2	S 7° 20' 19" W	544.21'
L3	S 5° 20' 10" W	221.31'
L4	S 2° 30' 08" W	97.16'
L5	S 7° 31' 02" W	100.00'
L6	N 82° 28' 58" W	30.00'
L7	N 7° 31' 02" E	98.69'
L8	N 2° 30' 08" E	96.59'
L9	N 5° 20' 10" E	222.58'
L10	N 7° 20' 19" E	541.65'
L11	N 4° 25' 28" W	15.30'
L12	N 73° 39' 28" E	30.66'
29433 Sq.Ft. 0.676 ACRES		

PROPOSED 100' x 100' U.S. CELLULAR LEASE AREA FOR TOWER SITE		
Line	Bearing	Distance
L13	S 82° 28' 58" E	100.00'
L14	S 7° 31' 02" W	100.00'
L15	N 82° 28' 58" W	100.00'
L16	N 7° 31' 02" E	100.00'
10000 Sq.Ft. 0.230 ACRES		

LEGAL DESCRIPTION FOR TOWER SITE:

Beginning at the centerline intersection of SR 1122 – Wards Corner Loop Road and NC Hwy. 53 thence running along the centerline of NC Hwy. 53 S 73–39–28 W, 1,652.39 feet to a magnetic nail set located in the centerline of NC Hwy. 53; said magnetic nail having NC Grid Coordinates N 285361.52 and E 2275088.48; thence leaving the centerline of NC Hwy. 53 S 16–20–32 E, 30.00 feet to a point located on the southern right of way of NC Hwy. 53; thence leaving the southern right of way of NC Hwy. 53 S 04–25–28 E, 24.72 feet to a point; thence S 07–20–19 W, 544.21 feet to a point; thence S 05–20–10 W, 221.31 feet to a point; thence S 02–30–08 W, 97.16 feet to an iron pipe set the POINT OF BEGINNING; thence from said point of beginning S 82–28–58 E, 100.00 feet to an iron pipe set; thence S 07–31–02 W, 100.00 feet to an iron pipe set; thence N 82–28–58 W, 100.00 feet to an iron pipe set; thence N 07–31–02 E, 100.00 feet to the point of beginning containing 0.230 acres.

LEGAL DESCRIPTION FOR INGRESS–EGRESS AND UTILITY EASEMENT:

Beginning at the centerline intersection of SR 1122 – Wards Corner Loop Road and NC Hwy. 53 thence running along the centerline of NC Hwy. 53 S 73–39–28 W, 1,652.39 feet to a magnetic nail set located in the centerline of NC Hwy. 53; said magnetic nail having NC Grid Coordinates N 285361.52 and E 2275088.48; thence leaving the centerline of NC Hwy. 53 S 16–20–32 E, 30.00 feet to a point located on the southern right of way of NC Hwy. 53 the POINT OF BEGINNING; thence from said point of beginning and leaving the southern right of way of NC Hwy. 53 S 04–25–28 E, 24.72 feet to a point; thence S 07–20–19 W, 544.21 feet to a point; thence S 05–20–10 W, 221.31 feet to a point; thence S 02–30–08 W, 97.16 feet to an iron pipe set; thence S 07–31–02 W, 100.00 feet to an iron pipe set; thence N 82–28–58 W, 30.00 feet to a point; thence N 07–31–02 E, 98.69 feet to a point; thence N 02–30–08 E, 96.59 feet to a point; thence N 05–20–10 E, 222.58 feet to a point; thence N 07–20–19 E, 541.65 feet to a point; thence N 04–25–28 W, 15.30 feet to a point located on the southern right of way of NC Hwy. 53; thence running along the southern right of way of NC Hwy. 53 N 73–39–28 E, 30.66 feet to the point of beginning containing 0.676 acres.

REFERENCE:

PIN # 2278–54–6803–0000
DEED BK. 4659, PG. 1608–1612
DEED BK. 4626, PG. 1511–1515
MAP BK. 8, PG. 112

Bar Scale
60 30 0 60 120

SHEET 1 OF 1

SURVEY FOR
USCOC
of Greater North Carolina, LLC
WARDS CORNER SITE # 556591
COLUMBIA TOWNSHIP, PENDER COUNTY, NORTH CAROLINA

OWNER(S) JANE WARD HIGHSMITH
ADDRESS 10280 NC HWY 53W, BURGAW, NC 28425
PHONE 910–470–9702

GARY S. MILLER & ASSOCIATES, P.A. LAND SURVEYORS
GARY S. MILLER, PLS
Phone (252)756–7878
Fax (252)756–0785
1803 South Charles Blvd.
Greenville, N.C. 27858
License # C–0225

SURVEYED: MCP	APPROVED: GSM
DRAWN: GSM/BLW	DATE: 10–29–18
CHECKED: GSM	SCALE: 1" = 60'

CERTIFICATION

I, Gary S. Miller, certify to the following:

This survey is of another category, such as the recombination of existing parcels, a court ordered survey, or other exception to the definition of subdivision;
that this map was drawn under my supervision from an actual survey made under my supervision (deed description recorded in Book 4659, Page 1608–1612 or other reference source MB 8, PG. 112); that the boundaries not surveyed are indicated as drawn from information in Book ____, Page ____ or other reference source SEE REF.; that the ratio of precision or positional accuracy is 1:10,000+; and that this map meets the requirements of The Standards of Practice for Land Surveying in North Carolina (21 NCAC 56.1600).
Witness my hand and seal this 29th day of OCTOBER, 2018.

Signed _____
Professional Land Surveyor No. L–2562

REVISIONS

DATE	DESCRIPTION

NORTH CAROLINA PROFESSIONAL SEAL L-2562 LAND SURVEYOR GARY S. MILLER

NOTES:

1. NO POINTS SET UNLESS OTHERWISE NOTED.
2. THIS SURVEY DOES NOT CREATE A SUBDIVISION OF LAND.
3. ELEVATIONS SHOWN ARE MEAN SEA LEVEL FROM NORTH CAROLINA GEODETIC MONUMENT "SAW". ELEVATION = 52.0' (NAVD 88)
4. THIS PROPERTY IS NOT LOCATED IN A SPECIAL FLOOD HAZARD AREA. COMMUNITY PANEL # 3720227800J EFFECTIVE DATE 02–16–2007 – ZONE X.
5. C/L TOWER LATITUDE: 34° 31' 40.73" LONGITUDE: 78° 05' 12.76" NAD 83
6. CENTERLINE TOWER ELEVATION = 54' – NAVD 88
7. BASIS OF BEARING IS GRID NORTH BASED ON NORTH CAROLINA STATE PLANE COORDINATE SYSTEM. NAD 1983
8. THIS SURVEY WAS PREPARED WITH THE AID OF TITLE COMMITMENT NO. USC–123218Z–C BY FIDELITY NATIONAL TITLE INSURANCE COMPANY HAVING AN EFFECTIVE DATE OF OCTOBER 1, 2018.

WO # 18187 FB # 385

LEGEND:

EIP	EXISTING IRON PIPE
IPS	IRON PIPE SET
R/W	RIGHT OF WAY
C/L	CENTERLINE
P/P	POWER POLE
G/W	GUY WIRE
T/P	TELEPHONE PEDESTAL
F/O	FIBER OPTIC WITNESS POST
O/H	OVERHEAD
P/L	PROPERTY LINE
x25.4'	SPOT ELEVATION
P/K	PARKER KALON
P.O.B.	POINT OF BEGINNING
TBM	TEMPORARY BENCHMARK
NCGS	NORTH CAROLINA GEODETIC SURVEY

18187.dwg/18187.psd

NORTH

EXISTING POWER POLE

NC HWY. 53

WARDS CORNER LOOP ROAD

WOODS

EXISTING TELEPHONE PEDESTAL

EXISTING FIBER OPTIC WITNESS POST

AG FIELD

TRANQUIL LN. (PRIVATE)

AG FIELD

EXISTING 12' SOIL & GRAVEL DRIVE; IMPROVE AS NECESSARY.

PROPOSED 30' WIDE U.S. CELLULAR ACCESS AND UTILITY EASEMENT CENTERED ON EXISTING GRAVEL DRIVE

PROPOSED UNDERGROUND UTILITY CONDUIT ROUTING, APPROX. 905' FROM COMPOUND TO RIGHT-OF-WAY; SEE E-503 FOR DETAILS

NOTE: NO GRAVEL TO BE INSTALLED ACROSS GRASS RUNWAY

EXISTING POWER POLE

GRASS RUNWAY - AIRSTRIP (PRIVATE)

WOODS LINE

EXISTING POWER POLE

WOODS

PROPOSED 30' WIDE GRAVEL TURNAROUND AREA

PROPOSED 40'-0" x 40'-0" CHAIN-LINK FENCED COMPOUND

PROPOSED MONOPOLE; SEE T-201 FOR DETAILS

PROPOSED 100'-0" x 100'-0" U.S. CELLULAR LEASE AREA

PROPOSED 30' WIDE U.S. CELLULAR ACCESS AND UTILITY EASEMENT CENTERED ON EXISTING GRAVEL DRIVE

WOODS

WOODS LINE

A **AERIAL OVERVIEW OF SITE**

60' 0 60' 120'

SCALE: 11" x 17" - 1" = 120'
22" x 34" - 1" = 60'

CONSULTANT:

Edge Consulting Engineers, Inc.
624 WATER STREET
PRAIRIE DU SAC, WI 53578
608.644.1449 VOICE
608.644.1549 FAX
www.edgeconsult.com
LICENSE NO.: C-4515

CLIENT:

U.S. Cellular
U.S. CELLULAR - OMAHA
10343 MILITARY AVENUE
OMAHA, NE 68134
PHONE: 402.515.4698

NORTH CAROLINA PROFESSIONAL SEAL 046428 ENGINEER ARLEN J. OSTRENG

12/3/2018

SITE PLAN
WARDS CORNER (556591)
BURGAW, NORTH CAROLINA

SHEET TITLE:

SUBMITTAL:

INT.	DATE:	DESCRIPTION:
TJT	10/17/2018	LEASE EXHIBIT
TJT	10/24/2018	PRELIM CDS
TJT	12/03/2018	FINAL CDS

CHECKED BY	AB
PLOT DATE	12/3/2018
PROJECT NUMBER	18686
SET TYPE	FINAL CDs
SHEET NUMBER	C-101

k:\18600\18686\CAD\Construction_Drawings\Plot\C-101.dgn

© EDGE CONSULTING ENGINEERS, INC.

NORTH

EXISTING 12' SOIL & GRAVEL DRIVE; IMPROVE AS NECESSARY.

PROPOSED 30' WIDE U.S. CELLULAR ACCESS AND UTILITY EASEMENT

APPROXIMATE WOODS LINE

PROPOSED UNDERGROUND UTILITY CONDUIT ROUTING. APPROX. 905' FROM COMPOUND TO RIGHT-OF-WAY; SEE E-503 FOR DETAILS

WOODS

(1) PROPOSED 2" CONDUIT FROM PPC TO EQUIPMENT CABINET FOR ELECTRIC SERVICE; SEE E-503 FOR DETAILS

(1) PROPOSED 1" CONDUIT FROM PPC TO EQUIPMENT CABINET ALARM CABLE; SEE E-503 FOR DETAILS

(2) PROPOSED 1-1/4" PVC FIBER CONDUITS WITH PULL STRING FROM EQUIPMENT CABINET (FOR POSSIBLE FUTURE FIBER); CAP STUB-UP ON INSIDE CORNER OF COMPOUND; SEE E-503 FOR DETAILS

REMOVE / CLEAR EXISTING BRUSH

PROPOSED U.S. CELLULAR EQUIPMENT CABINETS ON 14'-0" x 16'-0" CONCRETE PAD; SEE 'A' SERIES SHEETS FOR DETAILS

PROPOSED CONCRETE FILLED BOLLARD (TYP.); SEE C-501 FOR DETAIL

PROPOSED TRANSFORMER

PROPOSED MULTI-METER UTILITY RACK WITH PPC CABINET AND LIGHTS; SEE E-504 FOR DETAILS

PROPOSED 30' WIDE GRAVEL TURNAROUND AREA

(2) PROPOSED 4" CONDUITS FROM TRANSFORMER TO TERMINATION CABINET IN MULTI-METER UTILITY RACK FOR ELECTRIC SERVICE; SEE E-504 FOR DETAILS

PROPOSED GPS ANTENNA MOUNTED TO ICE CANOPY POST; SEE A-501 FOR DETAIL

PROPOSED 12' WIDE DOUBLE-SWING ACCESS GATE; SEE C-502 FOR DETAILS

(1) PROPOSED RAYCAP SPD MOUNTED TO UNISTRUT; SEE T-002 FOR DETAILS

PROPOSED 9' LONG U.S. CELLULAR ICE BRIDGE AND 5' LONG ICE CANOPY; SEE T-504 FOR DETAILS

GRAVEL COMPOUND

PROPOSED MONOPOLE; SEE T-201 FOR DETAILS

REMOVE / CLEAR EXISTING BRUSH

PROPOSED 40'-0" x 40'-0" CHAIN-LINK FENCED COMPOUND; SEE C-502 FOR DETAILS

PROPOSED 40'-0" FENCED COMPOUND

REMOVE / CLEAR EXISTING BRUSH

PROPOSED 100'-0" x 100'-0" U.S. CELLULAR LEASE AREA; SEE SURVEY

APPROXIMATE WOODS LINE

WOODS

2'-0" 5'-0" 12'-0" 14'-0" 9'-0" 1'-0" 3'-0" 16'-0" 15'-0" 6'-0" 1'-0" 1'-0" 16'-0" 24'-0" 30'-0" 2'-0" 14'-0" 12'-0" 14'-0" 6'-0" 4'-0" 5'-0" 6'-0"

A PROPOSED COMPOUND LOCATION

SCALE: 11" x 17" - 1" = 10'; 22" x 34" - 1" = 5'

CONSULTANT:

Edge Consulting Engineers, Inc.
624 WATER STREET
PRAIRIE DU SAC, WI 53578
608.644.1449 VOICE
608.644.1549 FAX
www.edgeconsult.com
LICENSE NO.: C-4515

CLIENT:

U.S. Cellular
U.S. CELLULAR - OMAHA
10343 MILITARY AVENUE
OMAHA, NE 68134
PHONE: 402.515.4698

NORTH CAROLINA PROFESSIONAL SEAL 046428 ENGINEER ARLEN J. OSTRENG
12/3/2018

ENLARGED SITE PLAN
WARDS CORNER (556591)
BURGAW, NORTH CAROLINA

SHEET TITLE:

SUBMITTAL:

INT.	DATE:	DESCRIPTION:
TJT	10/17/2018	LEASE EXHIBIT
TJT	10/24/2018	PRELIM CDS
TJT	12/03/2018	FINAL CDS

CHECKED BY	AB
PLOT DATE	12/3/2018
PROJECT NUMBER	18686
SET TYPE	FINAL CDs
SHEET NUMBER	C-102

K:\18600\18686\CAD\Construction_Drawings\Plot\C-102.dgn

© EDGE CONSULTING ENGINEERS, INC

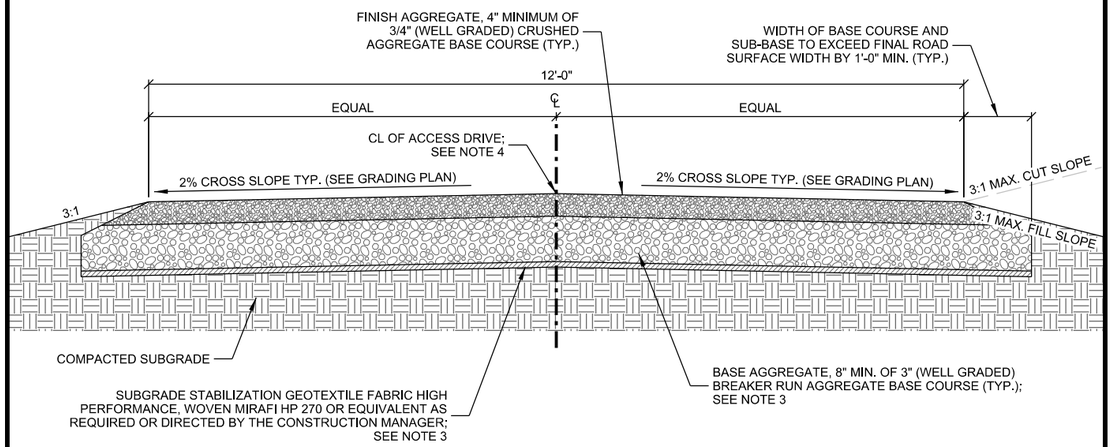

GENERAL NOTES:

1. REMOVE ALL TOPSOIL, ORGANIC MATERIAL AND WET OR POOR SOILS ALONG ACCESS DRIVE. CONTRACTOR TO REVIEW SITE CONDITIONS AND CONSULT GEOTECHNICAL REPORT FOR ANTICIPATED DEPTH OF SOILS THAT WILL REQUIRE REMOVAL. IF POOR SOILS ARE ENCOUNTERED AT A DEPTH OF MORE THAN 12", CONTACT CONSTRUCTION MANAGER FOR GUIDANCE.
2. SUBGRADE TO BE COMPACTED TO 95% MODIFIED PROCTOR AND VERIFIED BY PROOF-ROLL WITH LOADED TRI-AXLE DUMP TRUCK. CONTACT CONSTRUCTION MANAGER FOR GUIDANCE FOR FAILING SUBGRADE SOILS.
3. FAILING AREAS OF SUBGRADE SHALL BE UNDERCUT TO A MINIMUM DEPTH OF 18" BELOW FINISH AGGREGATE AND STABILIZED WITH 3" (WELL GRADED) BREAKER RUN AGGREGATE OVER SUBGRADE STABILIZATION GEOTEXTILE FABRIC.
4. CONSULT GRADING PLAN OR SITE PLAN FOR FINAL SITE GRADES.
5. THE CONTRACTOR SHALL BE RESPONSIBLE FOR ASPHALT ACCESS DRIVE REPAIR AND RESTORATION FOLLOWING CONSTRUCTION COMPLETION. ANY DISTURBED OR DAMAGED AREAS SHALL BE RESTORED TO THEIR ORIGINAL OR BETTER CONDITION UPON COMPLETION OF WORK.

A GRAVEL DRIVE CROSS SECTION

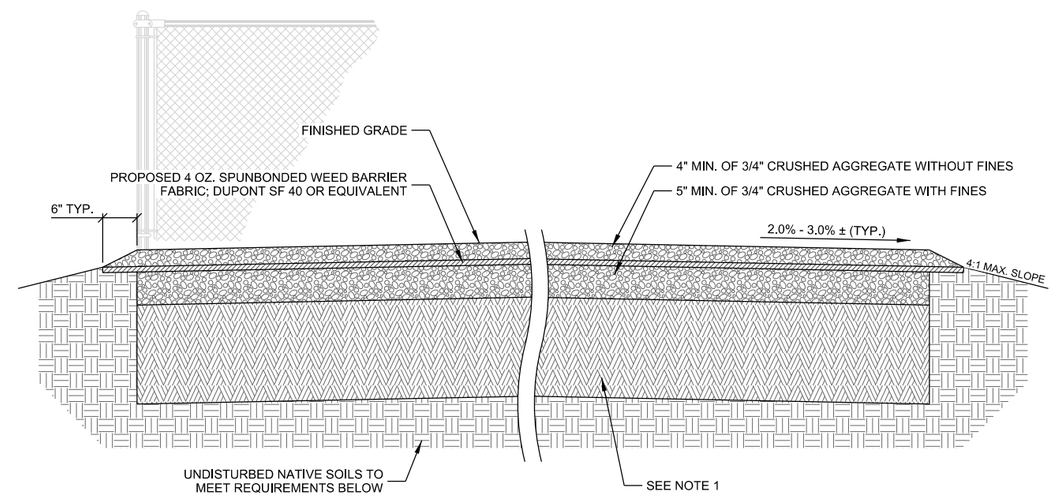

NOTES:

1. REMOVE ALL TOPSOIL, ORGANIC MATERIAL AND WET OR POOR SOILS WITHIN COMPOUND AREA. CONTRACTOR TO REVIEW SITE CONDITIONS AND CONSULT GEOTECHNICAL REPORT FOR ANTICIPATED DEPTH OF SOILS THAT WILL REQUIRE REMOVAL. IF POOR SOILS ARE ENCOUNTERED SELECT FILL MAY BE REQUIRED. CONTACT CONSTRUCTION MANAGER FOR GUIDANCE.
2. FINAL TOWER FOUNDATION DESIGN RECOMMENDATIONS TO SUPERCEDE GRADING PLAN OR SITE PLAN ELEVATIONS.

B COMPOUND CROSS SECTION

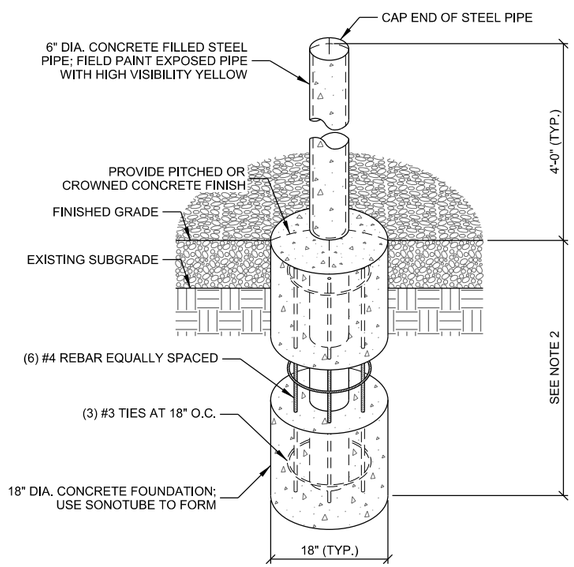

NOTES:

1. MAINTAIN 3" MINIMUM REBAR COVER IN ALL DIRECTION
2. PIER FOUNDATION DEPTH TO BE A MINIMUM OF 48"; DEPTH TO EXCEED LOCAL FROST DEPTH
3. CONCRETE TO BE A MINIMUM OF 4,000 PSI AT 28 DAYS

C PIPE BOLLARD

THIS SPACE INTENTIONALLY LEFT BLANK

D CULVERT

THIS SPACE INTENTIONALLY LEFT BLANK

CONSULTANT:

Edge
Consulting Engineers, Inc.
624 WATER STREET
PRAIRIE DU SAC, WI 53578
608.644.1449 VOICE
608.644.1549 FAX
www.edgeconsult.com
LICENSE NO.: C-4515

CLIENT:

U.S. Cellular
U.S. CELLULAR - OMAHA
10343 MILITARY AVENUE
OMAHA, NE 68134
PHONE: 402.515.4698

NORTH CAROLINA PROFESSIONAL SEAL 046428 ENGINEER ARLEN J. OSTRENG
12/3/2018

CONSTRUCTION DETAILS
WARDS CORNER (556591)
BURGAW, NORTH CAROLINA

SHEET TITLE:

SUBMITTAL:

INT.	DATE:	DESCRIPTION:
TJT	10/17/2018	LEASE EXHIBIT
TJT	10/24/2018	PRELIM CDS
TJT	12/03/2018	FINAL CDS

CHECKED BY	AB
PLOT DATE	12/3/2018
PROJECT NUMBER	18686
SET TYPE	FINAL CDs
SHEET NUMBER	C-501

© EDGE CONSULTING ENGINEERS, INC

K:\18600\18686\CAD\Construction_Drawings\Plot\C-501.dgn

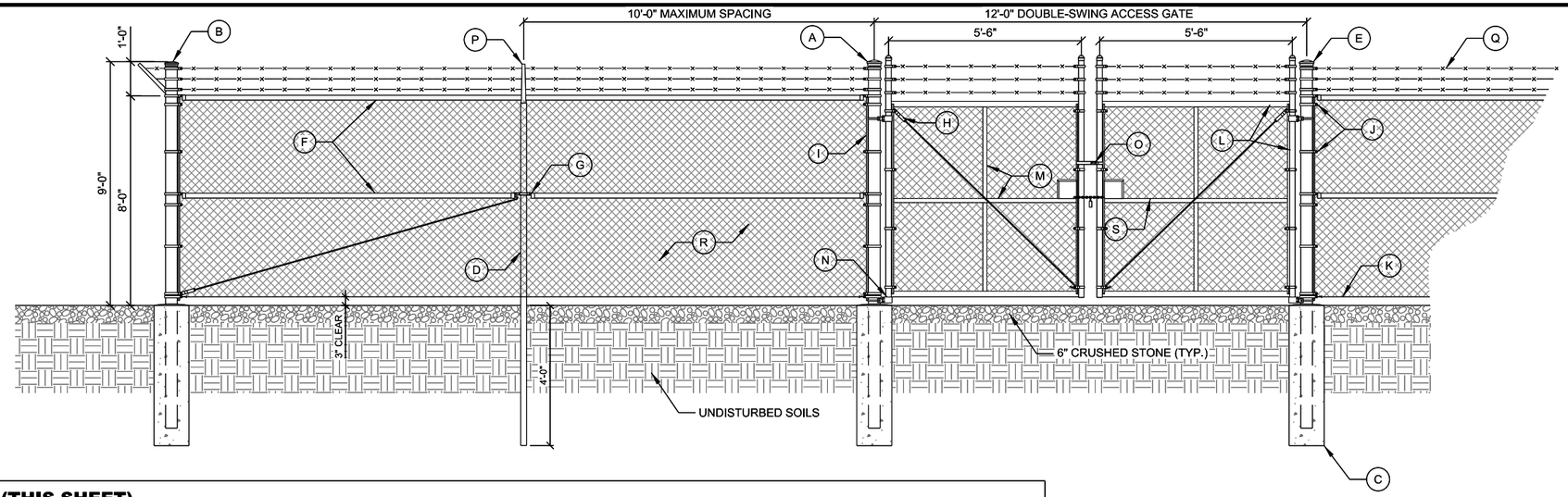

REFERENCE NOTES: (THIS SHEET)

- (A) 4" (4-1/2" O.D.) SCH. 40 GALV. STEEL GATE POST
- (B) 4" (4-1/2" O.D.) SCH 40 GALV. STEEL CORNER POST
- (C) CONCRETE PIER FOUNDATION; SEE DETAIL BELOW
- (D) 2" (2-3/8" O.D.) SCH. 40 GALV. STEEL INTERMEDIARY LINE POSTS; LINE POSTS SHALL BE EQUALLY SPACED AT MAXIMUM 10'-0" O.C
- (E) FENCE POST CAP (SIZE VARIES)
- (F) 1-1/4" (1.66" O.D.) TOP RAIL & MID BRACE RAIL PIPE
- (G) OFFSET BRACE RAIL ENDS FOR MID BRACE RAIL
- (H) 5/16" O.D. TRUSS ROD WITH TRUSS TIGHTENER ASSEMBLY
- (I) 3/16" x 3/4" STRETCHER BAR; TO EXTEND FULL HEIGHT OF FENCE FABRIC
- (J) 3/4" TENSION BAND (TYP.).
- (K) TENSION WIRE
- (L) 1-1/2" (1.9" O.D.) SCH. 40 GALV. STEEL FENCE GATE FRAME
- (M) 1-1/4" (1.66" O.D.) SCH. 40 GALV. STEEL HORIZONTAL AND VERTICAL GATE BRACES
- (N) MALLEABLE BUTT HINGES (TYP.)
- (O) GATE LATCH; VERIFY REQUIREMENTS WITH FENCE MANUFACTURER
- (P) 45° BARB ARM FENCE POST CAP
- (Q) (3) STRANDS OF 4 PT. GALV. BARB WIRE
- (R) #9 GAUGE GALV. CHAIN LINK FENCE FABRIC WITH TWISTED TOP SELVAGE AND KNUCKELD BOTTOM SELVAGE
- (S) 6" x 6" HANDHOLE FOR CHAIN LOCK

A COMPOUND FENCE

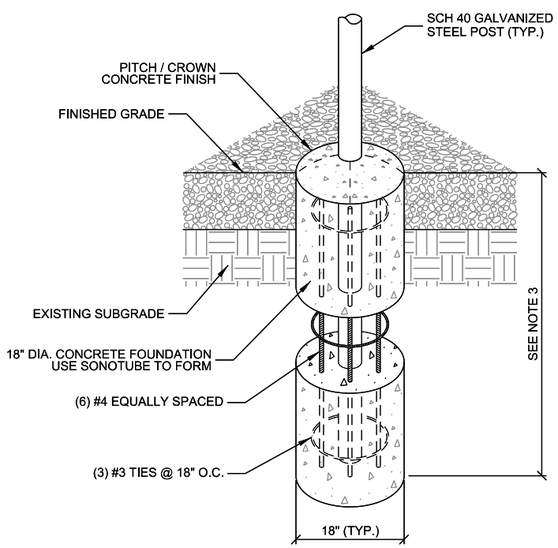

NOTES:

1. MAINTAIN 3" MINIMUM REBAR COVER WITH CONCRETE IN ALL DIRECTIONS.
2. CONCRETE MIX TO BE 4,000 PSI @ 28 DAYS.
3. FOUNDATION DEPTH TO EXCEED LOCAL FROST DEPTH, OR 48" MINIMUM.

B FENCE POST PIER FOUNDATION

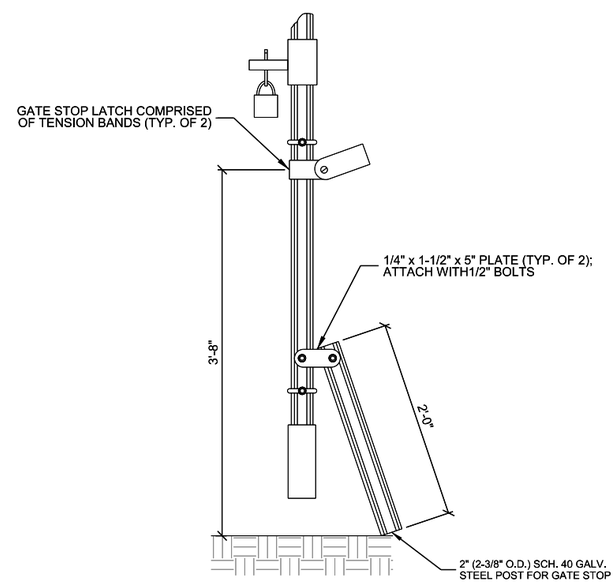

C GATE STOP

THIS SPACE INTENTIONALLY LEFT BLANK

CONSULTANT:

Edge Consulting Engineers, Inc.
624 WATER STREET
PRAIRIE DU SAC, WI 53578
608.644.1449 VOICE
608.644.1549 FAX
www.edgeconsult.com
LICENSE NO.: C-4515

CLIENT:

U.S. Cellular
U.S. CELLULAR - OMAHA
10343 MILITARY AVENUE
OMAHA, NE 68134
PHONE: 402.515.4698

NORTH CAROLINA PROFESSIONAL SEAL 046428 ENGINEER ARLEN J. OSTRENG
12/3/2018

FENCE DETAILS
WARDS CORNER (556591)
BURGAW, NORTH CAROLINA

SHEET TITLE:

SUBMITTAL:

INT.	DATE:	DESCRIPTION:
TJT	10/17/2018	LEASE EXHIBIT
TJT	10/24/2018	PRELIM CDS
TJT	12/03/2018	FINAL CDS

CHECKED BY	AB
PLOT DATE	12/3/2018
PROJECT NUMBER	18686
SET TYPE	FINAL CDs
SHEET NUMBER	C-502

k:\18600\18686\CAD\Construction_Drawings\Plot\C-502.dgn

© EDGE CONSULTING ENGINEERS, INC

Simply Intelligent

KMW COMMUNICATIONS

AM-X-CD-17-65-00T-RET

8' 65° Dual Broadband Electrical Downtilt Antenna
698 ~ 894MHz, X-pol., H65° / V9.5°
1710 ~ 2170MHz, X-pol., H65° / V6.4°

Electrical Specification

Frequency(MHz)		698~806	824~894	1710~1755	1850~1900	2110~2155
Impedance(Ω)		50	50	50	50	50
Polarization		±45°	±45°	±45°	±45°	±45°
Gain(dBi/dBd)		16.8 /14.65	17.5/15.35	17.3/15.05	17.8/15.55	18.1/15.75
Beamwidth	Horizontal	66°	64°	62°	65°	70°
	Vertical	10°	9°	6.7°	6.4°	6.0°
VSWR		≤1.5:1	≤1.5:1	≤1.5:1	≤1.5:1	≤1.5:1
Front-to-Back Ratio(dB)		≥27	≥27	≥27	≥27	≥27
Electrical Downtilt		0° ~ 12°	0° ~ 12°	0° ~ 10°	0° ~ 10°	0° ~ 10°
Isolation Ports(dB)		≥30	≥30	≥30	≥30	≥30
Isolation Frequency(dB)		≥35	≥35	≥35	≥35	≥35
Cross Pole Discrimination		10.0 dB @ ±60° 15.0 dB @ 0°	10.0 dB @ ±60° 15.0 dB @ 0°	10.0 dB @ ±60° 15.0 dB @ 0°	10.0 dB @ ±60° 15.0 dB @ 0°	10.0 dB @ ±60° 15.0 dB @ 0°
USLS(dB)		16	16	16	16	16
Side Lobe Suppression		> 16dB @ 0-6° > 18dB @ 7-12°	> 16dB @ 0-6° > 18dB @ 7-12°	> 16dB @ 0-6° > 18dB @ 7-10°	> 16dB @ 0-6° > 18dB @ 7-10°	> 16dB @ 0-6° > 18dB @ 7-10°
PIM (2x20w, dBc)		≤ -150	≤ -150	≤ -150	≤ -150	≤ -150
Input Power(W)		500	500	300	300	300

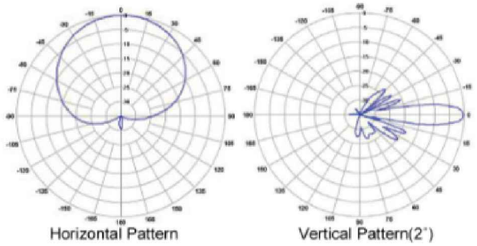

700MHz Band Pattern

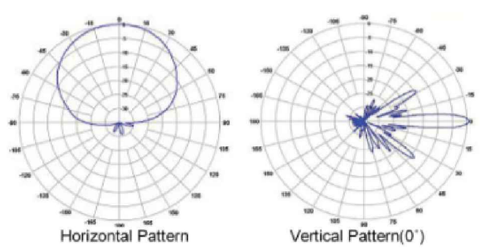

AWS Band Pattern

AISG Antenna Interface Standards Group

KMW Communications
www.kmwcomm.com
Contact: info@kmwcomm.com

Simply Intelligent

KMW COMMUNICATIONS

AM-X-CD-17-65-00T-RET

8' 65° Dual Broadband Electrical Downtilt Antenna
698 ~ 894MHz, X-pol., H65° / V9.5°
1710 ~ 2170MHz, X-pol., H65° / V6.4°

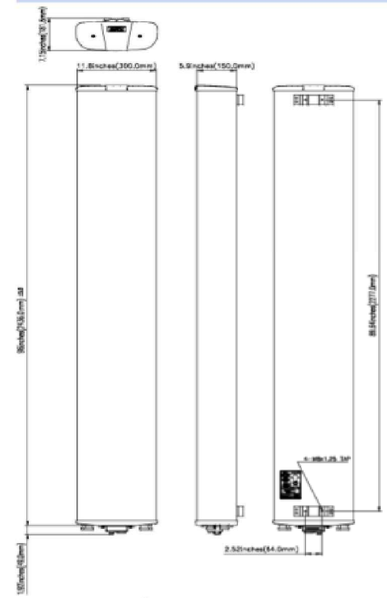

Mechanical Specification

Dimension (W×D×H)	11.8×5.9×96 inches (300×150×2436 mm)
Weight (Without clamp)	27 kg (59.5 lbs)
Connector	4 x 7/16 DIN(F), Long Neck
Max Wind Speed	150 mph
Wind Load (@150 mph)	2521 N

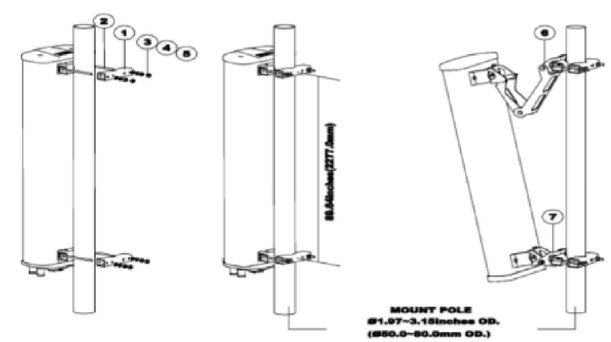

Part No.
1. Fixed Clamp
2. Hex. Cop Bolt, M10
3. Plain Washer, M10
4. Spring Washer, M10
5. Hex. Nut, M10
6. Adjustable Clamp Up
7. Adjustable Clamp Down

Recommending Torque
: 17mm Spanner
(208lbf.inch, 240kgf.cm)

Adjustable Clamp Range
: 0°-20°

*Note
- Environmental Compliance: IP 65 for Radome & IP 67 for Connectors
- RET Motor Configuration: Field Replaceable RET Electronic Control Module RET Motor is internal to antenna & not field replaceable
- Compliant with AISG: AISG 1.1 and 2.0
- Accessory: Standard Mounting Kit is included (Mechanical Down Tilt, KCLDM1B30000 is sold separately)

AISG Antenna Interface Standards Group

KMW Communications
www.kmwcomm.com
Contact: info@kmwcomm.com

A ANTENNA SPECIFICATIONS

CONSULTANT:
Edge Consulting Engineers, Inc.
624 WATER STREET
PRAIRIE DU SAC, WI 53578
608.644.1449 VOICE
608.644.1549 FAX
www.edgeconsult.com
LICENSE NO.: C-4515

CLIENT:
U.S. Cellular
U.S. CELLULAR - OMAHA
10343 MILITARY AVENUE
OMAHA, NE 68134
PHONE: 402.515.4698

NORTH CAROLINA PROFESSIONAL SEAL 046428 ENGINEER ARLEN J. OSTRENG
12/3/2018

SHEET TITLE:
ANTENNA SPECIFICATIONS
WARDS CORNER (556591)
BURGAW, NORTH CAROLINA

SUBMITTAL:

INT.	DATE:	DESCRIPTION:
TJT	10/17/2018	LEASE EXHIBIT
TJT	10/24/2018	PRELIM CDS
TJT	12/03/2018	FINAL CDS

CHECKED BY	AB
PLOT DATE	12/3/2018
PROJECT NUMBER	18686
SET TYPE	FINAL CDs
SHEET NUMBER	T-001

© EDGE CONSULTING ENGINEERS, INC

I:\18600\18686\CAD\Construction_Drawings\Plot\T-001.dgn

MANUFACTURER: RAYCAP
MODEL: RUSDC-6267-PF-48
DIMENSIONS: 20.6" x 18.9" x 5.8" (H x W x D)
WEIGHT: 19.95 LBS

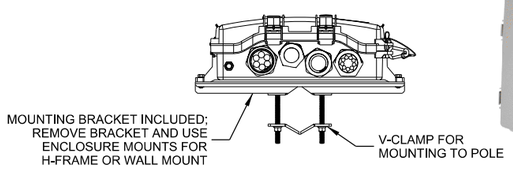

BOTTOM VIEW

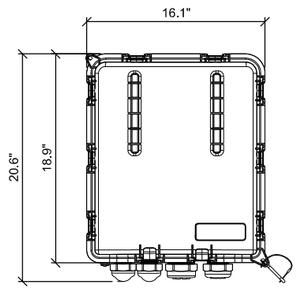

FRONT VIEW

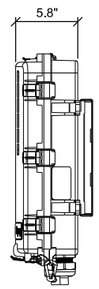

SIDE VIEW

A RAYCAP SURGE PROTECTOR DEVICE (SPD)

THIS SPACE INTENTIONALLY LEFT BLANK

B REMOTE RADIO UNIT (RRU)

THIS SPACE INTENTIONALLY LEFT BLANK

C RRU ADAPTER PLATE AND MOUNTING OPTIONS

MANUFACTURER: ERICSSON
MODEL: RRUS-11
DIMENSIONS: 17.8" x 17" x 7.2" (H x W x D)
WEIGHT: 51.0 LBS

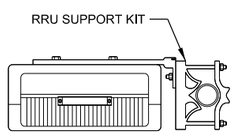

PLAN VIEW

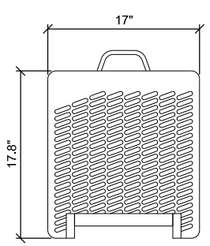

FRONT VIEW

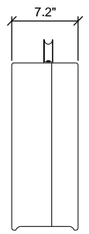

SIDE VIEW

NOTES:

1. REMOTE RADIO UNITS MUST BE POWERED UP WITHIN 48 HOURS OF INSTALLATION ON TOWER.

D REMOTE RADIO UNIT (RRU)

MANUFACTURER: ERICSSON
MODEL: SXK 107 2839/1
WEIGHT: 11.0 LBS

EXPANSION KIT ORDERED IN ADDITION TO SINGLE SUPPORT KIT FOR DUAL MOUNT:
MANUFACTURER: ERICSSON
MODEL: SXK 107 2839/2
WEIGHT: 4 LBS 6.5 OZ.

ALL HARDWARE INCLUDED

SINGLE UNIT

DOUBLE UNIT

E REMOTE RADIO UNIT (RRU) SUPPORT KIT

THIS SPACE INTENTIONALLY LEFT BLANK

F DIPLEXER

CONSULTANT:

Edge Consulting Engineers, Inc.
624 WATER STREET
PRAIRIE DU SAC, WI 53578
608.644.1449 VOICE
608.644.1549 FAX
www.edgeconsult.com
LICENSE NO.: C-4515

CLIENT:

U.S. Cellular
U.S. CELLULAR - OMAHA
10343 MILITARY AVENUE
OMAHA, NE 68134
PHONE: 402.515.4698

NORTH CAROLINA PROFESSIONAL SEAL 046428 ENGINEER ARLEN J. OSTRENG
12/3/2018

EQUIPMENT SPECIFICATIONS
WARDS CORNER (556591)
BURGAW, NORTH CAROLINA

SHEET TITLE:

SUBMITTAL:

INT.	DATE:	DESCRIPTION:
TJT	10/17/2018	LEASE EXHIBIT
TJT	10/24/2018	PRELIM CDS
TJT	12/03/2018	FINAL CDS

CHECKED BY	AB
PLOT DATE	12/3/2018
PROJECT NUMBER	18686
SET TYPE	FINAL CDs
SHEET NUMBER	T-002

k:\18600\18686\CAD\Construction_Drawings\Plot\T-002.dgn

© EDGE CONSULTING ENGINEERS, INC.

Technical Data Sheet **SU4-107BC**

SlimLine Antenna, Ultra High Performance, Single Polarized, 4 ft

Product Description
(Only available in North America)

RFS SlimLine® Antennas are designed for microwave systems in all common frequency ranges from 6 GHz to 25 GHz. The antennas are cost-effective products for microwave point-to-point transmission links. The antennas utilise a conventional feed system and are available in Standard, High and Ultra High performance radiation characteristic. The High performance antennas are available in single polarised (SD) as well as in dual polarised versions (SDX). Antennas with High Performance radiation characteristics are required for use in networks where there is a high interference potential. Antennas are available in 4 ft (1.2m) to 6 ft (1.8m) diameters. All antennas include a flexible radome to minimise its impact on the antenna?s electrical characteristics. The antennas are easy to install. A side strut is required for 6 ft-antennas.

Antenna

Features/Benefits

Technical Features

Product Type	Point to point antennas
Frequency, GHz	10.7 - 11.7
Diameter, ft (m)	4 (1.2)
Profile	SlimLine
Reflector	1-part
Swaybar	1: (1.35 m x Ø27 mm)
Performance	Ultra High
Polarization	Single
Regulatory Compliance	ETSI EN 302217 Range 1, class 3 , FCC Category A
3dB beamwidth, (degrees)	1.5
Antenna Input	CPR90G
Low Band Gain, dBi	40.1
Mid Band Gain, dBi	40.5
High Band Gain, dBi	40.9
F/B Ratio, dB	66
XPD, dB	32
Max VSWR / R L, dB	1.15 (23.1)
Elevation Adjustment, degrees	± 15
Azimuth Adjustment, degrees	± 5
Polarization Adjustment, degrees	± 5
Radome	flexible
Antenna color	White RAL 9010
Mounting Pipe Diameter minimum, mm (in)	114 (4.5)
Mounting Pipe Diameter maximum, mm (in)	114 (4.5)
Approximate Weight, kg (lb)	35 (77)
Survival Windspeed, km/h (mph)	200 (125)
Operational Windspeed, km/h (mph)	190 (118)
Further Accessories	SMA-SKO-UNIVERSAL : Universal sway bar fixation kit

All information contained in the present datasheet is subject to confirmation at time of ordering

Technical Data Sheet **SU4-107BC (Cont.)**

SlimLine Antenna, Ultra High Performance, Single Polarized, 4 ft

All values @ Survival Wind Speed

F_{ST} Side force max, N (lb)	1630 (365)
F_{AT} Fa Axial force max, N (lb)	3290 (737)
M Torque max., Nm (lb*ft)	1055 (784)

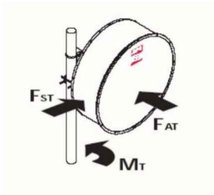

Dimensions	mm (in)
ØA	1313 (51.7)
B	746 (29.4)
C	248 (9.8)
D @ Mounting pipe Ø 219 (8.5):	not applicable
D @ Mounting pipe Ø 114 (4.5):	365 (14.4)
D @ Mounting pipe Ø 89 (3.5):	not applicable
D @ Mounting pipe Ø 48 (1.9):	not applicable
E	115 (4.5)
F	365 (14.4)
G	not applicable
H	not applicable

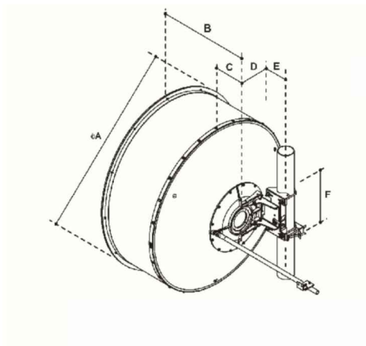

Notes

no notes

Documentation

Reflector installation
Feed installation

RPE (IQ-Link format)
RPE (Pathloss format)
RPE (PDF format)

All information contained in the present datasheet is subject to confirmation at time of ordering

A **MICROWAVE DISH SPECIFICATIONS**

CONSULTANT:

Edge Consulting Engineers, Inc.
624 WATER STREET
PRAIRIE DU SAC, WI 53578
608.644.1449 VOICE
608.644.1549 FAX
www.edgeconsult.com
LICENSE NO.: C-4515

CLIENT:

U.S. Cellular
U.S. CELLULAR - OMAHA
10343 MILITARY AVENUE
OMAHA, NE 68134
PHONE: 402.515.4698

NORTH CAROLINA PROFESSIONAL SEAL 046428 ENGINEER ARLEN J. OSTRENG

12/3/2018

SHEET TITLE:

MICROWAVE DISH SPECIFICATIONS
WARDS CORNER (556591)
BURGAW, NORTH CAROLINA

SUBMITTAL:

INT.	DATE:	DESCRIPTION:
TJT	10/17/2018	LEASE EXHIBIT
TJT	10/24/2018	PRELIM CDS
TJT	12/03/2018	FINAL CDS

CHECKED BY	AB
PLOT DATE	12/3/2018
PROJECT NUMBER	18686
SET TYPE	FINAL CDs
SHEET NUMBER	T-003

© EDGE CONSULTING ENGINEERS, INC

k:\18600\18686\CAD\Construction_Drawings\Plot\T-003.dgn

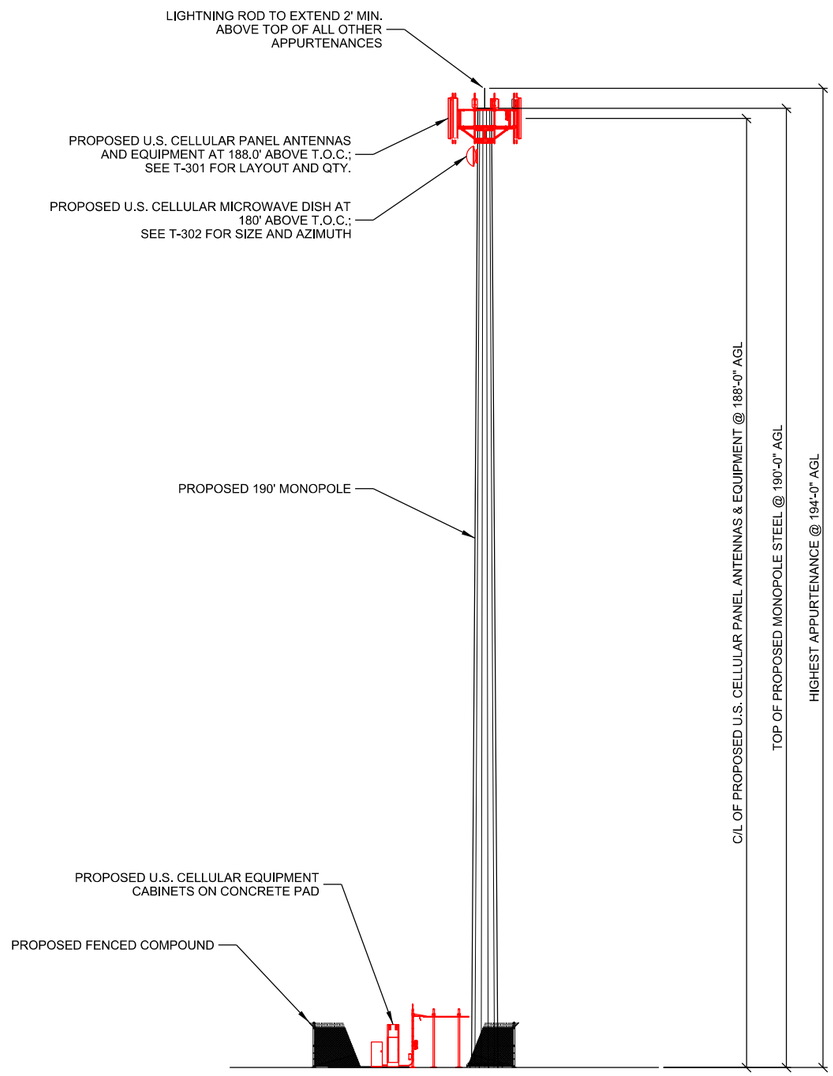

NOTES:

1. CONTRACTOR TO VERIFY HEIGHT AND DIRECTION OF ANTENNAS WITH PROJECT MANAGER.
2. CONTRACTOR TO VERIFY LIGHTNING ROD EXTENDS 2' MIN. ABOVE ALL ANTENNAS & EQUIPMENT.

A **SITE ELEVATION**

SCALE: 11" x 17" - 1" = 30'-0"
22" x 34" - 1" = 15'-0"

CONSULTANT:

Edge
Consulting Engineers, Inc.
624 WATER STREET
PRAIRIE DU SAC, WI 53578
608.644.1449 VOICE
608.644.1549 FAX
www.edgeconsult.com
LICENSE NO.: C-4515

CLIENT:

U.S. Cellular
U.S. CELLULAR - OMAHA
10343 MILITARY AVENUE
OMAHA, NE 68134
PHONE: 402.515.4698

NORTH CAROLINA PROFESSIONAL SEAL 046428 ENGINEER ARLEN J. OSTRENG

12/3/2018

SHEET TITLE:

SITE ELEVATION
WARDS CORNER (556591)
BURGAW, NORTH CAROLINA

SUBMITTAL:

INT.	DATE:	DESCRIPTION:
TJT	10/17/2018	LEASE EXHIBIT
TJT	10/24/2018	PRELIM CDS
TJT	12/03/2018	FINAL CDS

CHECKED BY	AB
PLOT DATE	12/3/2018
PROJECT NUMBER	18686
SET TYPE	FINAL CDs
SHEET NUMBER	T-201

k:\18600\18686\CAD\Construction_Drawings\Plot\T-201.dgn

© EDGE CONSULTING ENGINEERS, INC

NORTH

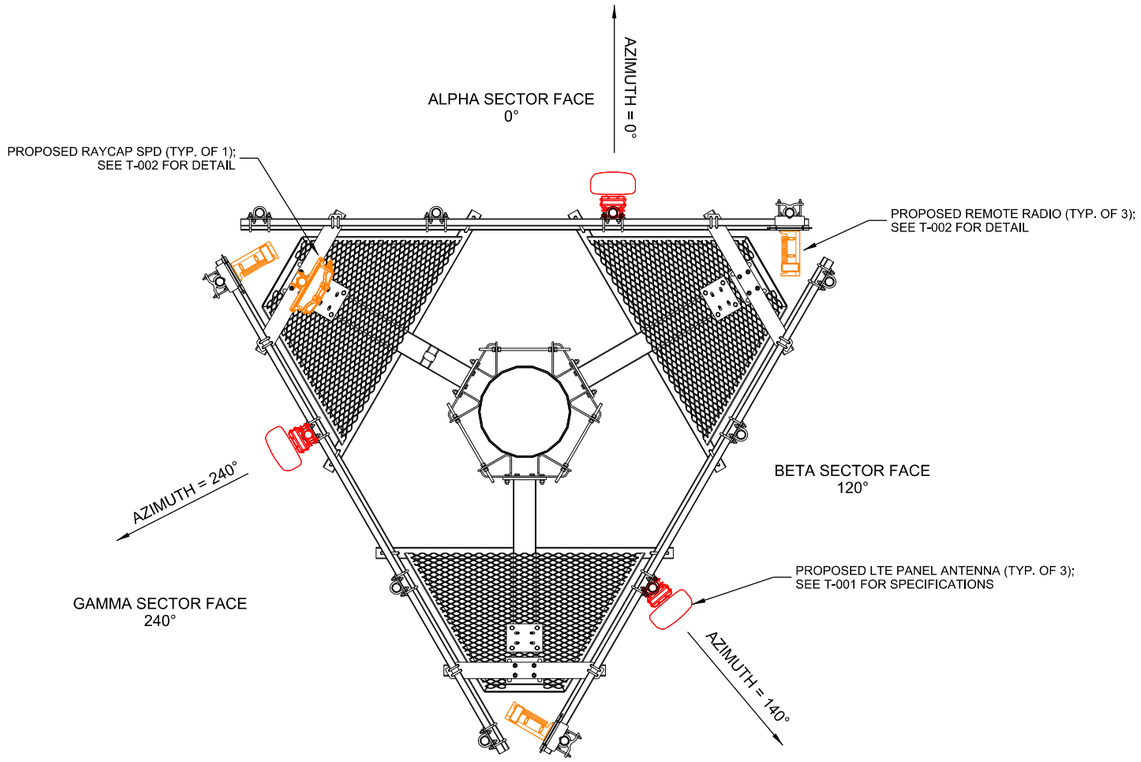

Proposed Loading :

Antenna Information :

Sector	Ant ID	Ant Manufac.	Ant Model	Ant Qty	Rad Ctr.	Mech Tilt	Radome Notes	Azi
Alpha	3	KMW	AM-X-CD-17-65-00RET	1	190	0		0
Alpha								
Alpha								
Alpha								
Alpha								
Alpha								
Beta	3	KMW	AM-X-CD-17-65-00RET	1	190	0		140
Beta								
Beta								
Beta								
Beta								
Beta								
Gamma	3	KMW	AM-X-CD-17-65-00RET	1	190	0		240
Gamma								
Gamma								
Gamma								
Gamma								
Gamma								
Total :				3				

Radio Information:

Tech	Band											
	B12 Radio	Radio Qty	Tower Ground Mounted - 2T2R/4T4R	B5 Radio	Radio Qty	Tower Ground Mounted - 2T2R/4T4R	B2 Radio	Radio Qty	Tower Ground Mounted - 2T2R/4T4R	B4 Radio	Radio Qty	Tower Ground Mounted - 2T2R/4T4R
LTE	RRU 11	1	TM-2T2R									
LTE	RRU 11	1	TM-2T2R									
LTE	RRU 11	1	TM-2T2R									
		3			0							

Other:

Diplexer	Diplr. Qty	Cable Length	Cable Qty	Coax Size	Raycap Box Qty	Top Bias-T	TMA
		Hybrid	1	Hybrid 1-1/4"	1		
	0		1				

NOTE:

1. ALL ANTENNA AZIMUTHS TO BE FROM TRUE NORTH.

A **ANTENNA AND EQUIPMENT LAYOUT**

SCALE: 11" x 17" - 1/4" = 1'-0"
22" x 34" - 1/2" = 1'-0"

PER U.S. CELLULAR RDP DATED
11/19/2018 PROVIDED BY OTHERS

CONSULTANT:

Edge
Consulting Engineers, Inc.
624 WATER STREET
PRAIRIE DU SAC, WI 53578
608.644.1449 VOICE
608.644.1549 FAX
www.edgeconsult.com
LICENSE NO.: C-4515

CLIENT:

U.S. Cellular
U.S. CELLULAR - OMAHA
10343 MILITARY AVENUE
OMAHA, NE 68134
PHONE: 402.515.4698

NORTH CAROLINA PROFESSIONAL SEAL 046428 ENGINEER ARLEN J. OSTRENG
12/3/2018

ANTENNA AND EQUIPMENT CONFIGURATION

WARDS CORNER (556591)
BURGAW, NORTH CAROLINA

SHEET TITLE:

SUBMITTAL:

INT.	DATE:	DESCRIPTION:
TJT	10/17/2018	LEASE EXHIBIT
TJT	10/24/2018	PRELIM CDS
TJT	12/03/2018	FINAL CDS

CHECKED BY	AB
PLOT DATE	12/3/2018
PROJECT NUMBER	18686
SET TYPE	FINAL CDs
SHEET NUMBER	**T-301**

k:\18600\18686\CAD\Construction_Drawings\Plot\T-301.dgn

© EDGE CONSULTING ENGINEERS, INC.

NORTH

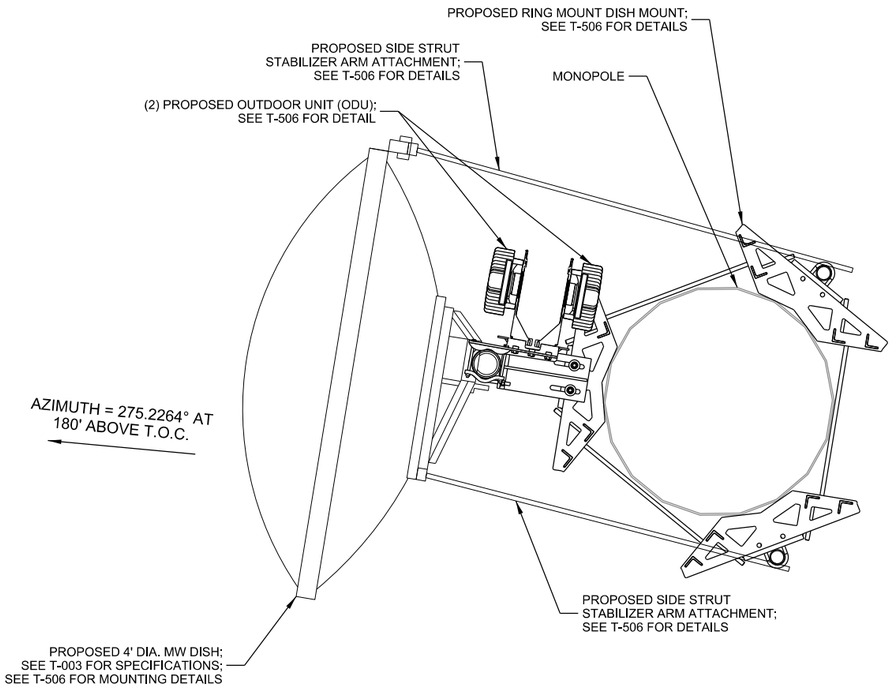

NOTE:

1. ALL DISH AZIMUTHS TO BE FROM TRUE NORTH.

A **MICROWAVE DISH LAYOUT**

SCALE: 11" x 17" - 1/4" = 1'-0"
22" x 34" - 1/2" = 1'-0"

DETAIL NOT APPLICABLE

B **MICORWAVE PATH DATA SHEET**

CONSULTANT:

Edge
Consulting Engineers, Inc.
624 WATER STREET
PRAIRIE DU SAC, WI 53578
608.644.1449 VOICE
608.644.1549 FAX
www.edgeconsult.com
LICENSE NO.: C-4515

CLIENT:

U.S. Cellular
U.S. CELLULAR - OMAHA
10343 MILITARY AVENUE
OMAHA, NE 68134
PHONE: 402.515.4698

NORTH CAROLINA PROFESSIONAL SEAL 046428 ENGINEER ARLEN J. OSTRENG

12/3/2018

SHEET TITLE:

MICROWAVE DISH CONFIGURATION

WARDS CORNER (556591)
BURGAW, NORTH CAROLINA

SUBMITTAL:

INT.	DATE:	DESCRIPTION:
TJT	10/17/2018	LEASE EXHIBIT
TJT	10/24/2018	PRELIM CDS
TJT	12/03/2018	FINAL CDS

CHECKED BY	AB
PLOT DATE	12/3/2018
PROJECT NUMBER	18686
SET TYPE	FINAL CDs
SHEET NUMBER	T-302

k:\18600\18686\CAD\Construction_Drawings\Plot\T-302.dgn

© EDGE CONSULTING ENGINEERS, INC.

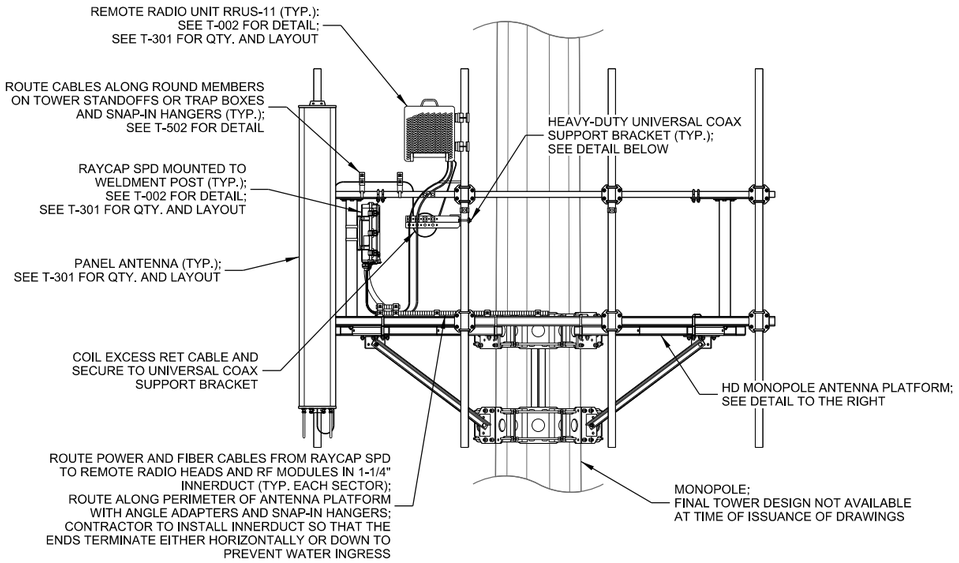

NOTE:

1. JUMPER CABLES FROM DIPLEXER TO ANTENNA TO BE SECURED TO ANTENNA PLATFORM WITH STAND-OFF KIT; SEE T-502 FOR DETAIL.

A ANTENNA & EQUIPMENT MOUNTING

MANUFACTURER: SABRE
MODEL: C10855666C

12' HD MONOPOLE ANTENNA PLATFORM

KIT INCLUDES (2) TRI COLLAR MOUNTS THAT FIT 10" DIA. TO 40" DIA. MONOPOLES

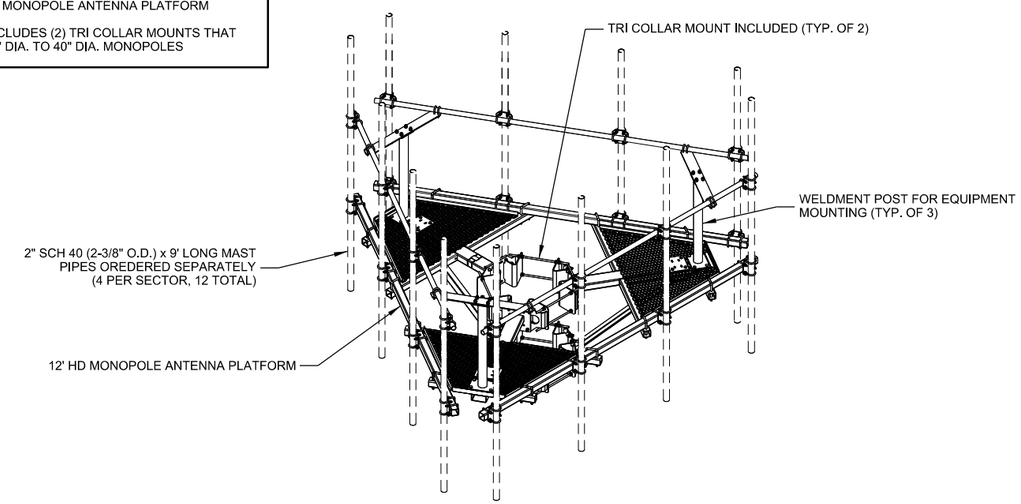

NOTE:

1. CONTRACTOR TO VERIFY POLE DIAMETER AND SUITABILITY OF PROPOSED MOUNT FOR SITUATION. IF AN ALTERNATIVE SOLUTION IS PROPOSED, NOTIFY ENGINEER AND OWNER PRIOR TO PROCEEDING.

B 12' HD MONOPOLE ANTENNA PLATFORM

MANUFACTURER: SITE PRO 1
MODEL: UTL8

HEAVY-DUTY UNIVERSAL SUPPORT BRACKET

MOUNTS TO ROUND MEMBERS (1-1/2" O.D. TO 5-1/2" O.D.)

PUNCHED WITH 3/4" DIA. HOLES FOR SNAP-IN HANGERS AND 7/16" DIA. HOLES FOR HARDWARE

HOT-DIP GALVANIZED

CAN BE BOLTED DIRECTLY TO PIROD KNOCK-DOWN LEGS WITH INCLUDED HARDWARE

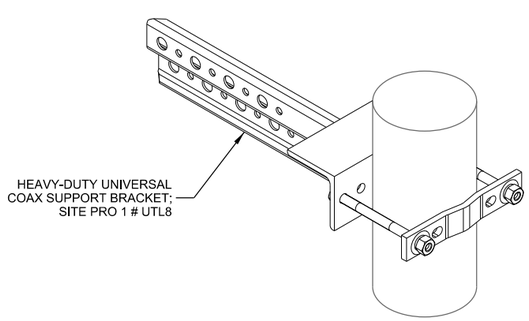

C HEAVY-DUTY UNIVERSAL COAX SUPPORT BRACKET

THIS SPACE INTENTIONALLY LEFT BLANK

CONSULTANT:
Edge Consulting Engineers, Inc.
624 WATER STREET
PRAIRIE DU SAC, WI 53578
608.644.1449 VOICE
608.644.1549 FAX
www.edgeconsult.com
LICENSE NO.: C-4515

CLIENT:
U.S. Cellular
U.S. CELLULAR - OMAHA
10343 MILITARY AVENUE
OMAHA, NE 68134
PHONE: 402.515.4698

NORTH CAROLINA PROFESSIONAL SEAL 046428 ENGINEER ARLEN J. OSTRENG
12/3/2018

INSTALLATION DETAILS
WARDS CORNER (556591)
BURGAW, NORTH CAROLINA

SHEET TITLE:

SUBMITTAL:

INT.	DATE:	DESCRIPTION:
TJT	10/17/2018	LEASE EXHIBIT
TJT	10/24/2018	PRELIM CDS
TJT	12/03/2018	FINAL CDS

CHECKED BY	AB
PLOT DATE	12/3/2018
PROJECT NUMBER	18686
SET TYPE	FINAL CDs
SHEET NUMBER	T-501

K:\18600\18686\CAD\Construction_Drawings\Plot\T-501.dgn

© EDGE CONSULTING ENGINEERS, INC

EUPEN HYBRID CABLE LENGTH	
QUANTITY FROM RAYCAP SPD ON UNISTRUT RACK	1
LENGTH ALONG ICE BRIDGE	10 FT
LENGTH FROM T.O.C. TO TOWER TOP RAYCAP SPD	188 FT
TOTAL LENGTH OF HYBRID CABLE	198 FT
ROUNDED LENGTH **	220 FT

* 410' MAX = TYPICAL HYBRID CABLE
* 550' MAX = LOW INDUCTANCE HYBRID CABLE

COAX JUMPER CABLE INFO		
REMOTE RADIO (B12) TO ANTENNA		
	QUANTITY	LENGTH
ALPHA SECTOR	2	15 FT
BETA SECTOR	2	15 FT
GAMMA SECTOR	2	15 FT

RET CABLE INFO			
ANTENNA TO REMOTE RADIO			
	QUANTITY	LENGTH	
ALPHA SECTOR	1	32.8 FT	10 m
BETA SECTOR	1	32.8 FT	10 m
GAMMA SECTOR	1	32.8 FT	10 m

* STANDARD RET CABLE LENGTH OF 10 METERS;
RF APPROVAL REQ'D FOR ADDITIONAL RET CABLE LENGTH

FIBER JUMPER CABLE INFO			
RAYCAP SPD TO REMOTE RADIO (B12)			
	QUANTITY	LENGTH	
ALPHA SECTOR	1	16.4 FT	5 m
BETA SECTOR	1	16.4 FT	5 m
GAMMA SECTOR	1	16.4 FT	5 m

ALL SECTORS MUST HAVE THE SAME JUMPER LENGTHS
* PREFERRED JUMPER LENGTH OF 5m (16.4')
* MAXIMUM JUMPER LENGTH OF 6m (19.7')

POWER JUMPER CABLE INFO			
RAYCAP SPD TO REMOTE RADIO (B12)			
	QUANTITY	LENGTH	
ALPHA SECTOR	2	16.4 FT	5 m
BETA SECTOR	2	16.4 FT	5 m
GAMMA SECTOR	2	16.4 FT	5 m

ALL SECTORS MUST HAVE THE SAME JUMPER LENGTHS
* PREFERRED JUMPER LENGTH OF 5m (16.4')
* MAXIMUM JUMPER LENGTH OF 6m (19.7')

A CABLE LENGTHS

MANUFACTURER: EUPEN
MINIMUM BENDING RADIUS: 360mm (14")
MAXIMUM PULLING STRENGTH: 150 daN
MAXIMUM HANGER SPACING: 1.0 m
APPROX. WEIGHT: 2300 kg/km (1.55 LB/FT)

1-1/4" HYBRID FIBER OPTIC CABLE WITH 48V ENERGY FEEDER IN CORRUGATED ALUMINUM SHIELDING WITH UV RESISTANT PE JACKET.

SHIPPED WITH 4' PROTECTED JACKET (2.25" O.D.) AT EACH END.

NON-ARMORED ENDS ARE 3" IN LENGTH (2" O.D.).

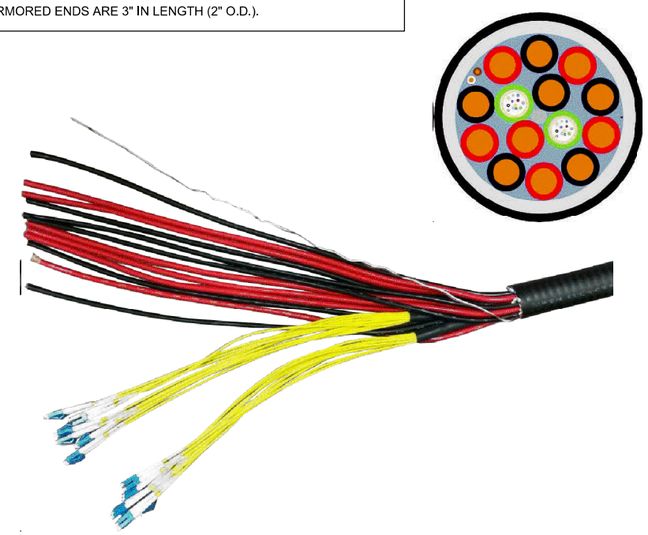

B EUPEN HYBRID CABLE

MANUFACTURER: SITE PRO 1

MODEL: STK2-U
UNIVERSAL TOWER STANDOFF KIT
FITS 1-1/2" DIA. TO 3" DIA. ROUND MEMBERS

MODEL: 78SS-A
7/8" STACKABLE SNAP-IN HANGER

MODEL: BCU78X
UNIVERSAL BARREL CUSHION
ACCEPTS 0.16" TO 0.55" O.D. CABLES
7/8" MATING HANGER

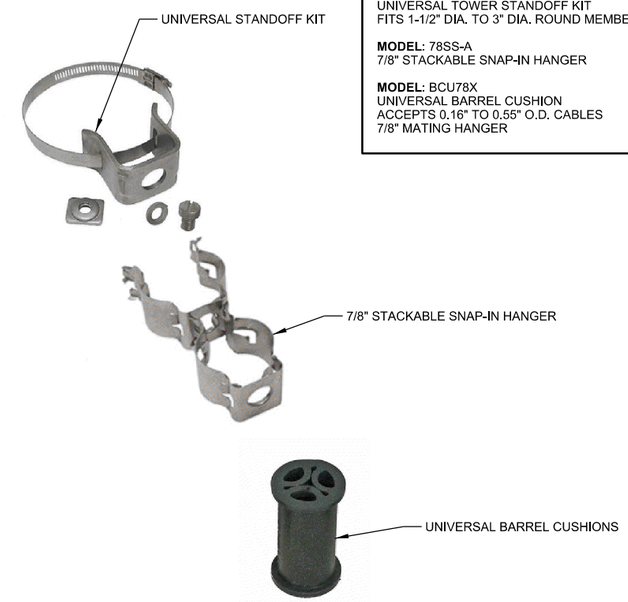

C JUMPER ATTACHMENT

VIEW INSIDE OF RAYCAP SPD

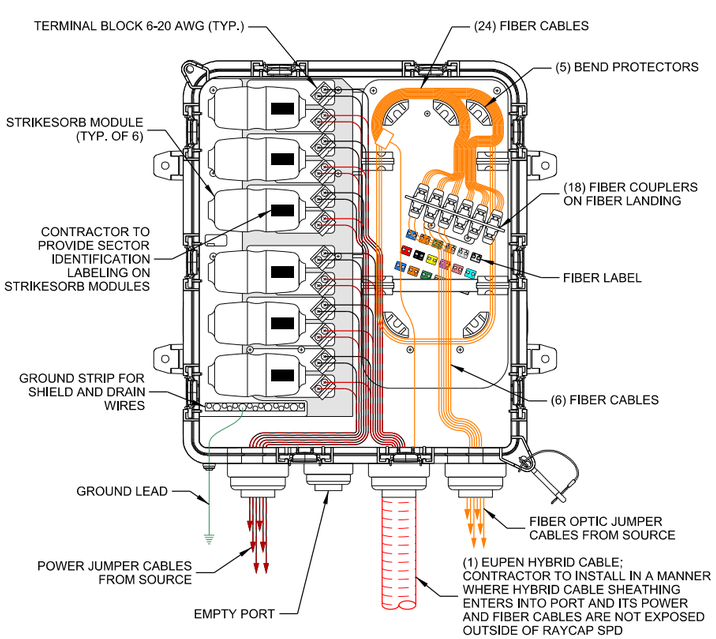

D RAYCAP SURGE PROTECTOR DEVICE (SPD) CABLING

VIEW INSIDE OF LID

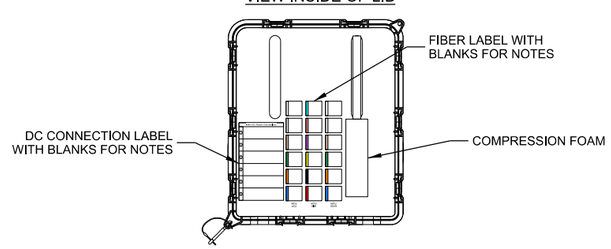

TOP ROW

13a	13b	14a	14b	15a	15b	16a	16b	17a	17b	18a	18b
TX	RX	TX	RX	TX	RX	TX	RX	TX	RX	TX	RX

MID ROW

7a	7b	8a	8b	9a	9b	10a	10b	11a	11b	12a	12b
TX	RX	TX	RX	TX	RX	TX	RX	TX	RX	TX	RX

BASE ROW

1a	1b	2a	2b	3a	3b	4a	4b	5a	5b	6a	6b
TX	RX	TX	RX	TX	RX	TX	RX	TX	RX	TX	RX

E FIBER LABEL

Part Description				Stock
Part Number	Application	Jacket	Color	Code
LMR-400	Outdoor	PE	Black	54001
LMR-400-DB	Outdoor/Watertight	PE	Black	54091
LMR-400-FR	Indoor/Outdoor Riser CMR	FRPE	Black	54030
LMR-400-FR-PVC	Indoor/Outdoor Riser CMR	FRPVC	Black	54073
LMR-400-PVC	General Purpose	PVC	Black	54218
LMR-400-PVC-W	General Purpose	PVC	White	54204

Construction Specifications			
Description	Material	In.	(mm)
Inner Conductor	Solid BCCAI	0.108	(2.74)
Dielectric	Foam PE	0.285	(7.24)
Outer Conductor	Aluminum Tape	0.291	(7.39)
Overall Braid	Tinned Copper	0.320	(8.13)
Jacket	(see table)	0.405	(10.29)

Environmental Specifications		
Performance Property	°F	°C
Installation Temperature Range	-40/+185	-40/+85
Storage Temperature Range	-94/+185	-70/+85
Operating Temperature Range	-40/+185	-40/+85

Electrical Specifications			
Performance Property	Units	US	(metric)
Velocity of Propagation	%	84	
Dielectric Constant	NA	1.38	
Time Delay	nS/ft (nS/m)	1.20	(3.92)
Impedance	ohms	50	
Capacitance	pF/ft (pF/m)	23.9	(78.4)
Inductance	uH/ft (uH/m)	0.060	(0.20)
Shielding Effectiveness	dB	>90	
DC Resistance			
Inner Conductor	ohms/1000ft (/km)	1.39	(4.6)
Outer Conductor	ohms/1000ft (/km)	1.65	(5.4)
Voltage Withstand	Volts DC	2500	
Jacket Spark	Volts RMS	8000	
Peak Power	kW	16	

Mechanical Specifications			
Performance Property	Units	US	(metric)
Bend Radius: installation	in. (mm)	1.00	(25.4)
Bend Radius: repeated	in. (mm)	4.0	(101.6)
Bending Moment	ft-lb (N-m)	0.5	(0.68)
Weight	lb/ft (kg/m)	0.068	(0.10)
Tensile Strength	lb (kg)	160	(72.6)
Flat Plate Crush	lb/in. (kg/mm)	40	(0.71)

LMR-400 MICROWAVE CABLE LENGTH	
QUANTITY FROM LTE EQUIPMENT CABINET	2
LENGTH FROM LTE CABINET TO TOWER CENTER	25 FT
LENGTH FROM T.O.C. TO MICROWAVE DISH C/L	180 FT
TOTAL LENGTH OF CABLE	205 FT
ROUNDED LENGTH **	220 FT

E LMR-400 MICROWAVE DISH CABLE

CONSULTANT:
Edge Consulting Engineers, Inc.
624 WATER STREET
PRAIRIE DU SAC, WI 53578
608.644.1449 VOICE
608.644.1549 FAX
www.edgeconsult.com
LICENSE NO.: C-4515

CLIENT:
U.S. Cellular
U.S. CELLULAR - OMAHA
10343 MILITARY AVENUE
OMAHA, NE 68134
PHONE: 402.515.4698

NORTH CAROLINA PROFESSIONAL SEAL 046428 ENGINEER ARLEN J. OSTRENG
12/3/2018

CABLE DETAILS
WARDS CORNER (556591)
BURGAW, NORTH CAROLINA

SHEET TITLE:

SUBMITTAL:

INT.	DATE:	DESCRIPTION:
TJT	10/17/2018	LEASE EXHIBIT
TJT	10/24/2018	PRELIM CDS
TJT	12/03/2018	FINAL CDS

CHECKED BY	AB
PLOT DATE	12/3/2018
PROJECT NUMBER	18686
SET TYPE	FINAL CDs
SHEET NUMBER	T-502

K:\18600\18686\CAD\Construction_Drawings\Plot\T-502.dgn

© EDGE CONSULTING ENGINEERS, INC

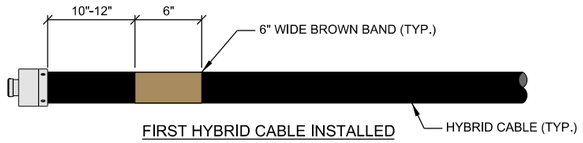

FIRST HYBRID CABLE INSTALLED

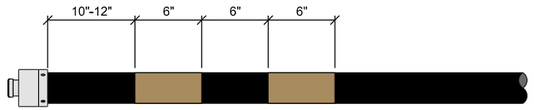

SECOND HYBRID CABLE INSTALLED (IF APPLICABLE)

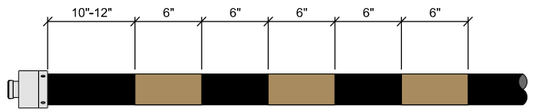

THIRD HYBRID CABLE INSTALLED (IF APPLICABLE)

NOTES:

1. AT THE TOP OF THE TOWER/BUILDING/WATER TOWER AND AT THE ENTRY POINT OF THE GROUND LEVEL JUNCTION BOX, HYBRID CABLES MUST BE BANDED IN ACCORDANCE TO THE ILLUSTRATION ABOVE.
2. REFER TO LATEST EDITION OF U.S. CELLULAR STANDARD: STD72 TO VERIFY CURRENT COLOR CODING

A TYP. HYBRID COLOR CODE

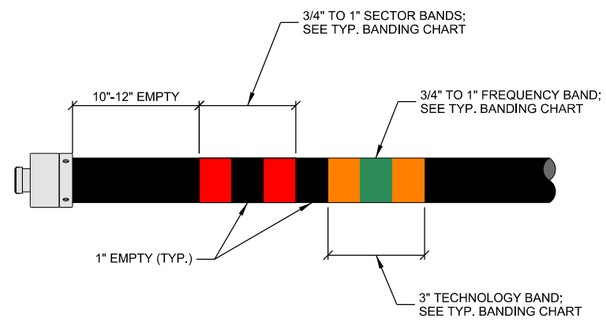

B TYP. COAX JUMPER BANDING

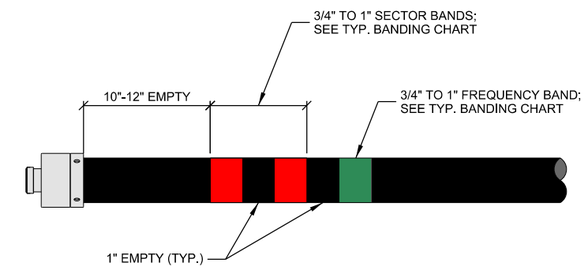

C TYP. POWER JUMPER BANDING

THIS SPACE INTENTIONALLY LEFT BLANK

D DETAIL NOT REQUIRED

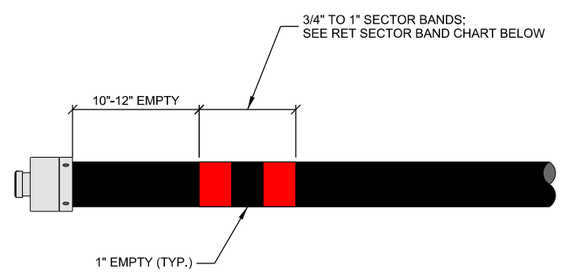

RET SECTOR BAND		
SECTOR	LINE 1 1st TECHNOLOGY	LINE 2 1st TECHNOLOGY
ALPHA	(1) RED BAND	(2) RED BANDS
BETA	(1) WHITE BAND	(2) WHITE BANDS
GAMMA	(1) BLUE BAND	(2) BLUE BANDS

E TYP. RET CABLE BANDING

SECTOR BAND				
SECTOR	LINE 1 1st TECHNOLOGY	LINE 2 1st TECHNOLOGY	LINE 1 2nd TECHNOLOGY (IF APPLICABLE)	LINE 2 2nd TECHNOLOGY (IF APPLICABLE)
ALPHA	(1) RED BAND	(2) RED BANDS	(1) RED BAND	(2) RED BANDS
BETA	(1) WHITE BAND	(2) WHITE BANDS	(1) WHITE BAND	(2) WHITE BANDS
GAMMA	(1) BLUE BAND	(2) BLUE BANDS	(1) BLUE BAND	(2) BLUE BANDS
DELTA (IF APPLICABLE)	(1) GREEN BAND	(2) GREEN BANDS	(1) GREEN BAND	(2) GREEN BANDS
EPSILON (IF APPLICABLE)	(1) VIOLET BAND	(2) VIOLET BANDS	(1) VIOLET BAND	(2) VIOLET BANDS
ZETA (IF APPLICABLE)	(1) BROWN BAND	(2) BROWN BANDS	(1) BROWN BAND	(2) BROWN BANDS

TECHNOLOGY BAND	
TECHNOLOGY	BANDING
CDMA	YELLOW
GSM	VIOLET
LTE	ORANGE

FREQUENCY BAND	
TECHNOLOGY	BANDING
700	GREEN
800	BROWN
1900	BLUE
2100	WHITE

F TYP. BANDING CHART

CONSULTANT:

Edge
Consulting Engineers, Inc.
624 WATER STREET
PRAIRIE DU SAC, WI 53578
608.644.1449 VOICE
608.644.1549 FAX
www.edgeconsult.com
LICENSE NO.: C-4515

CLIENT:

U.S. Cellular
U.S. CELLULAR - OMAHA
10343 MILITARY AVENUE
OMAHA, NE 68134
PHONE: 402.515.4698

NORTH CAROLINA PROFESSIONAL SEAL 046428 ENGINEER ARLEN J. OSTRENG
12/3/2018

SHEET TITLE:

CABLE BANDING DETAILS
WARDS CORNER (556591)
BURGAW, NORTH CAROLINA

SUBMITTAL:

INT.	DATE:	DESCRIPTION:
TJT	10/17/2018	LEASE EXHIBIT
TJT	10/24/2018	PRELIM CDS
TJT	12/03/2018	FINAL CDS

CHECKED BY	AB
PLOT DATE	12/3/2018
PROJECT NUMBER	18686
SET TYPE	FINAL CDs
SHEET NUMBER	T-503

I:\18600\18686\CAD\Construction_Drawings\Plot\T-503.dgn

© EDGE CONSULTING ENGINEERS, INC

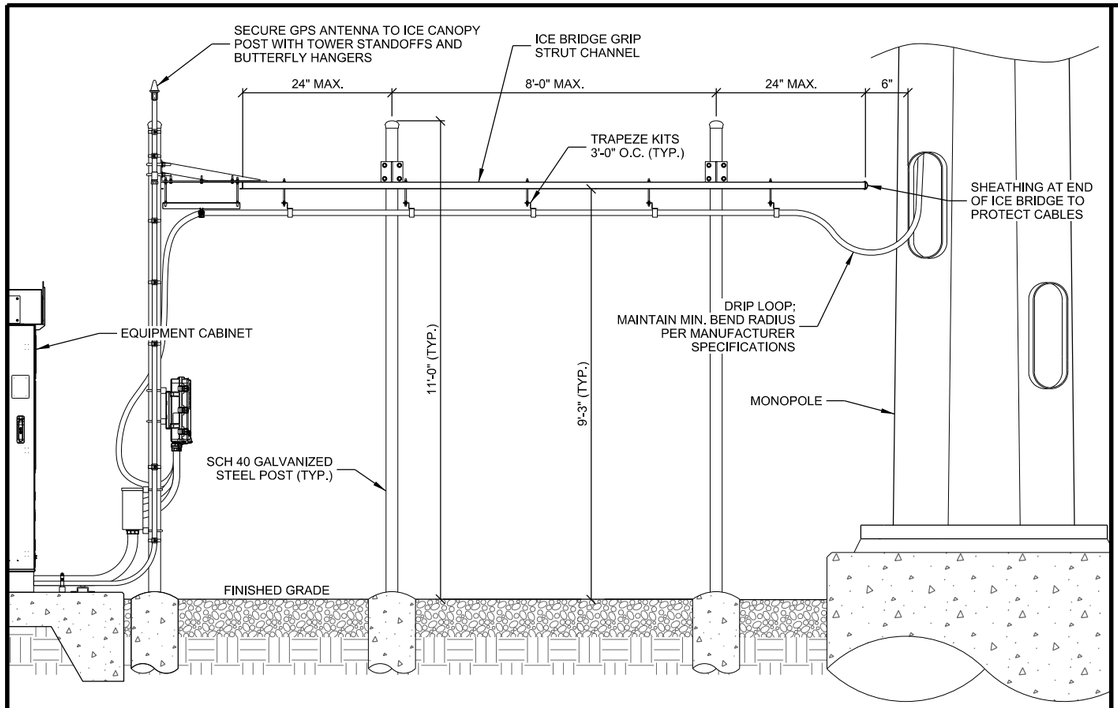

A ICE BRIDGE INSTALLATION

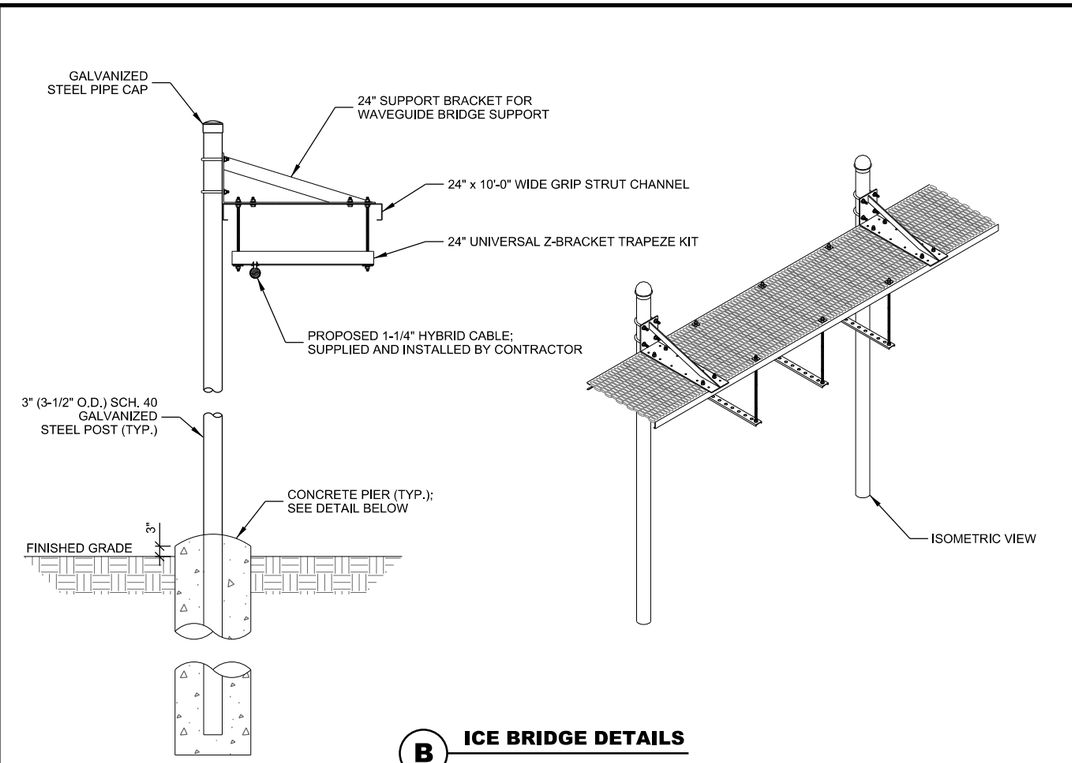

B ICE BRIDGE DETAILS

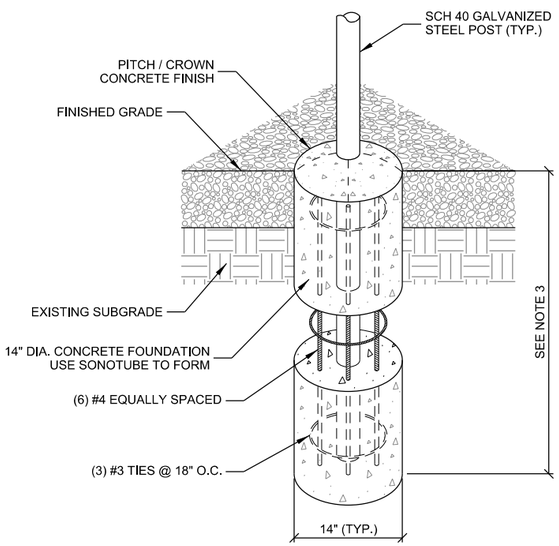

NOTES:

1. MAINTAIN 3" MINIMUM REBAR COVER WITH CONCRETE IN ALL DIRECTIONS.
2. CONCRETE MIX TO BE 4,000 PSI @ 28 DAYS.
3. FOUNDATION DEPTH TO EXCEED LOCAL FROST DEPTH, OR 48" MINIMUM.

C PIER FOUNDATION

THIS SPACE INTENTIONALLY LEFT BLANK

ICE BRIDGE NOTES : (THIS SHEET)

1. FOR COMPONENTS AS SHOWN IN STANDARD DETAILS, MAXIMUM ALLOWABLE SPAN BETWEEN SUPPORTS ON A CONTINUOUS SINGLE SECTION OF BRIDGE CHANNEL SHALL BE 8' FOR A 10' SECTION.
2. SPLICES IN SECTIONS OF BRIDGE CHANNEL SHALL BE INSTALLED AT SUPPORTS, WHERE POSSIBLE, OR AT MOST 2' FROM A SUPPORT.
3. FREE ENDS OF ICE BRIDGE CHANNELS SHALL NOT EXCEED A CANTILEVER DISTANCE OF 2' FROM A SUPPORT.
4. CUT BRIDGE CHANNEL SECTIONS SHALL HAVE RAW EDGES TREATED WITH COLD GALVANIZING SPRAY.
5. DEVIATIONS FROM STANDARDS FOR COMPONENT INSTALLATIONS ARE PERMITTED WITH MANUFACTURER'S AND ENGINEER'S APPROVAL.
6. DEVIATIONS FROM ICE BRIDGE FOUNDATIONS SHOWN ON SITE SPECIFIC DRAWINGS OR STANDARD DETAILS REQUIRE ENGINEERING APPROVAL.

CONSULTANT:
Edge Consulting Engineers, Inc.
624 WATER STREET
PRAIRIE DU SAC, WI 53578
608.644.1449 VOICE
608.644.1549 FAX
www.edgeconsult.com
LICENSE NO.: C-4515

CLIENT:
U.S. Cellular
U.S. CELLULAR - OMAHA
10343 MILITARY AVENUE
OMAHA, NE 68134
PHONE: 402.515.4698

NORTH CAROLINA PROFESSIONAL SEAL 046428 ENGINEER ARLEN J. OSTRENG
12/3/2018

ICE BRIDGE DETAILS
WARDS CORNER (556591)
BURGAW, NORTH CAROLINA

SHEET TITLE:

SUBMITTAL:

INT.	DATE:	DESCRIPTION:
TJT	10/17/2018	LEASE EXHIBIT
TJT	10/24/2018	PRELIM CDS
TJT	12/03/2018	FINAL CDS

CHECKED BY	AB
PLOT DATE	12/3/2018
PROJECT NUMBER	18686
SET TYPE	FINAL CDs
SHEET NUMBER	T-504

k:\18600\18686\CAD\Construction_Drawings\Plot\T-504.dgn

© EDGE CONSULTING ENGINEERS, INC.

Diagram #43B

Ericsson 2T2R B12

U.S. Cellular

THIS IS A PER SECTOR CONFIGURATION

Cable Legend

- UPEN Hybrid Cable
- ½" Coax Cable
- Fiber Jumper
- Power Jumper
- RET Jumper

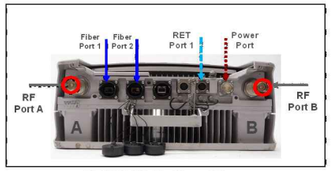

RRUS-11 Bottom View

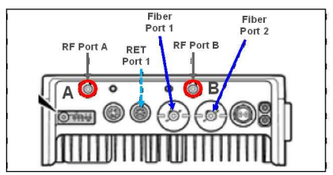

Radio 2217 Bottom View

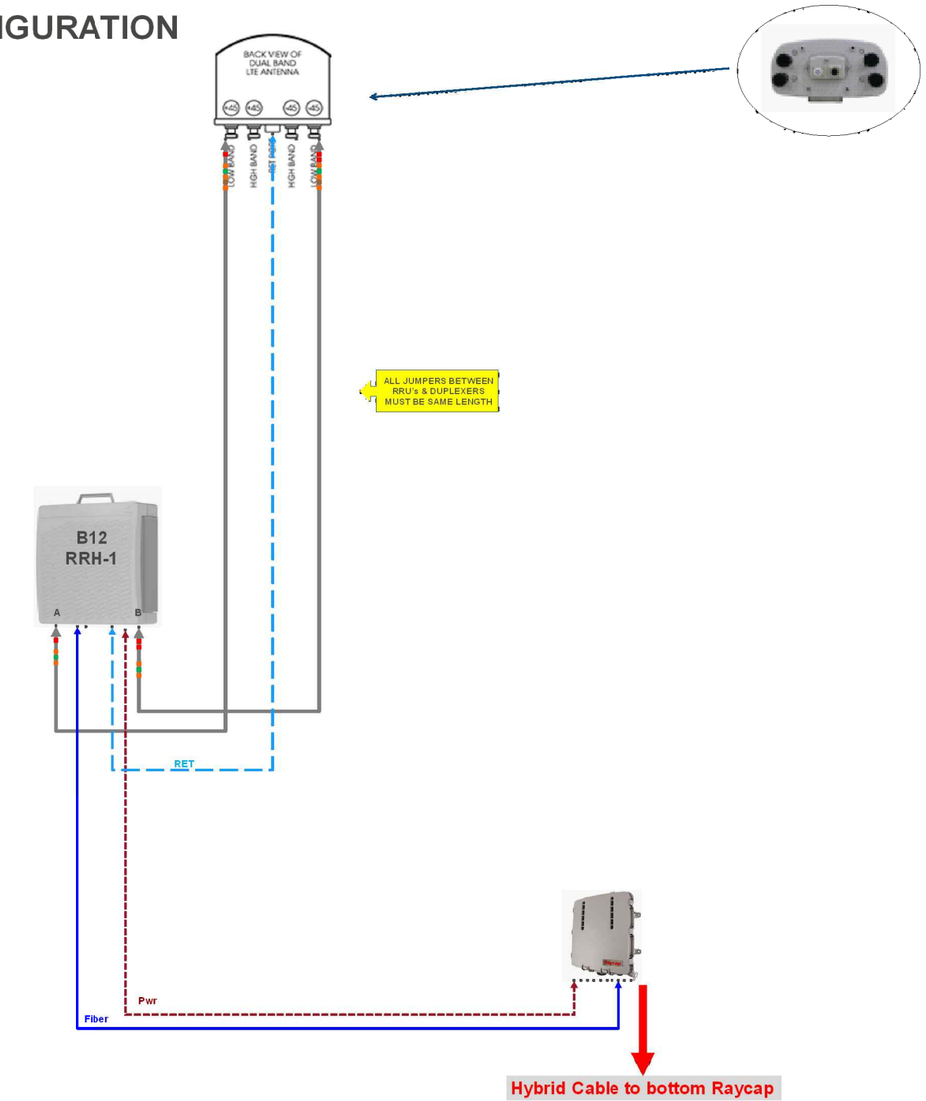

ALL JUMPERS BETWEEN RRU's & DUPLEXERS MUST BE SAME LENGTH

Contains U.S. Cellular® confidential information. Not for external use or disclosure without proper authorization.

NOTES:

1. CONTRACTOR TO INSTALL WEATHERPROOF CAP AT BOTH UN-USED HIGH BAND PORTS ON ANTENNAS.
2. CONTRACTOR TO INSTALL TERMINATION LOADS AT UN-USED JUMPER PORTS ON DIPLEXERS WHEN SPECIFIED; ROSENBERGER # L-2-DM-01
3. EXCESS JUMPER AND RET CABLES TO BE SECURED AND ROUTED WITH GROMMETS WITH SNAP-INS; VELCRO TIES MAY NOT BE USED.

A PLUMBING DIAGRAM

CONSULTANT:
Edge Consulting Engineers, Inc.
624 WATER STREET
PRAIRIE DU SAC, WI 53578
608.644.1449 VOICE
608.644.1549 FAX
www.edgeconsult.com
LICENSE NO.: C-4515

CLIENT:
U.S. Cellular
U.S. CELLULAR - OMAHA
10343 MILITARY AVENUE
OMAHA, NE 68134
PHONE: 402.515.4698

NORTH CAROLINA PROFESSIONAL SEAL 046428 ENGINEER ARLEN J. OSTRENG
12/3/2018

SHEET TITLE:
PLUMBING DIAGRAM
WARDS CORNER (556591)
BURGAW, NORTH CAROLINA

SUBMITTAL:

INT.	DATE:	DESCRIPTION:
TJT	10/17/2018	LEASE EXHIBIT
TJT	10/24/2018	PRELIM CDS
TJT	12/03/2018	FINAL CDS

CHECKED BY	AB
PLOT DATE	12/3/2018
PROJECT NUMBER	18686
SET TYPE	FINAL CDs
SHEET NUMBER	T-505

I:\18600\18686\CAD\Construction_Drawings\Plot\T-505.dgn

© EDGE CONSULTING ENGINEERS, INC.

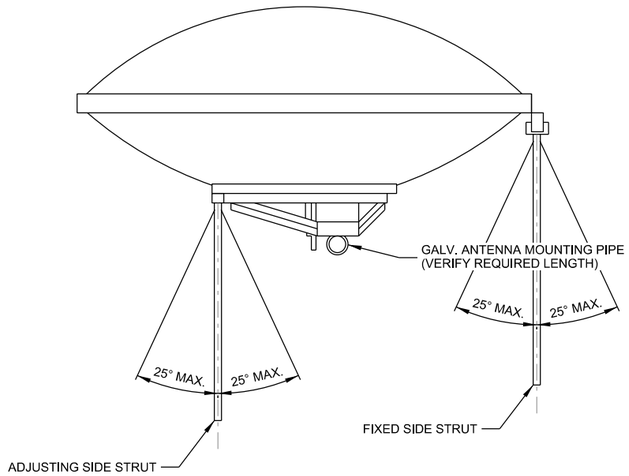

NOTES:

1. MICROWAVE DISH SIDE STRUTS TO BE CONNECTED TO ADJACENT TOWER LEGS OR LEG MOUNTED TOWER FACE SUPPORT KITS. SIDE STRUTS SHALL NOT BE CONNECTED TO SUPPORT MEMBERS LOCATED ON THE FACE OF THE TOWER.

A MICROWAVE DISH MOUNT

MANUFACTURER: ANDREW
MODEL: RM-DM-6

UNIVERSAL RING MOUNT WITH 63" LONG x 4-1/2" O.D. MOUNTING PIPE

MOUNTS TO MONOPOLE 12" TO 50" DIAMETER

INCLUDES RING MOUNTS, CLAMPS, PIPE, AND HARDWARE

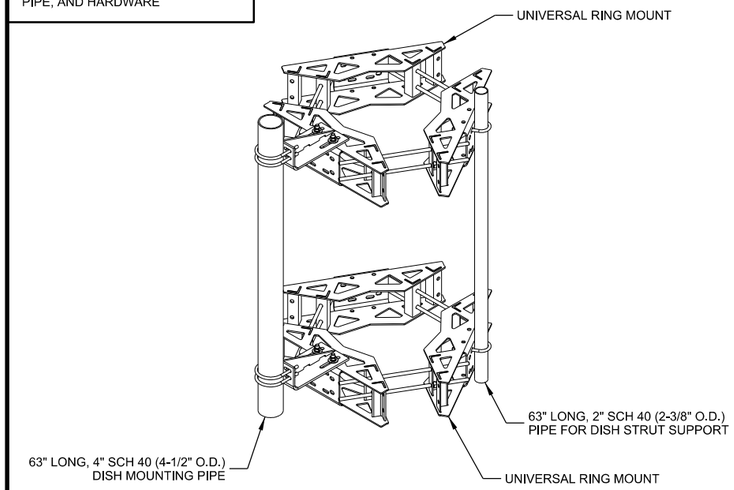

B RING MOUNT DISH MOUNT

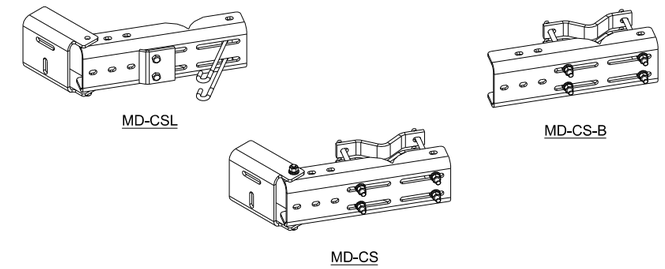

NOTES:

1. ANDREW TOWER LEG MICROWAVE DISH SUPPORT STRUT KITS
   a. MOUNT TO STRAIGHT OR TAPERED LEGS UP TO 16" O.D., 16" 60° ANGLE LEG OR 12" 90° ANGLE LEG. SEE PART # DESCRIPTION FOR KIT DETAILS:
   b. ROUND OR 60° ANGLE LEGS UP TO 8" OR 6" 90° ANGLE LEGS
      MD-CS - FOR UP TO 3-1/2" PIPES (KIT OF 1)
      MD-CSL - FOR UP TO 4-1/2" PIPES (KIT OF 1)
      MD-CS-F - FACE MOUNTED FOR UP TO 3-1/2" PIPES (KIT OF 2)
      MD-CS-B - FACE MOUNTED (KIT OF 1)
   c. ROUND OR 60° ANGLE LEGS UP TO 16" OR 12" 90° ANGLE LEGS
      MDL-CS - FOR UP TO 3-1/2" PIPES (KIT OF 1)
      MDL-CSL - FOR UP TO 4-1/2" PIPES (KIT OF 1)
      MDL-CS-F - FACE MOUNTED FOR UP TO 3-1/2" PIPES (KIT OF 2)
      MDL-CS-B - FACE MOUNTED (KIT OF 1)
2. ANDREW TOWER FACE MICROWAVE DISH SUPPORT KITS
   a. MOUNT TO STRAIGHT OR TAPERED LEGS UP TO 16" O.D., 16" 60° ANGLE LEG OR 12" 90° ANGLE LEG. KITS COME WITH (2) SUPPORT BRACKETS.
   b. ROUND OR 60° ANGLE LEGS UP TO 8" OR 6" 90° ANGLE LEGS
      MD-CS-6R - 6' (1.8 M) PLAIN END PIPE
      MD-CS-8R - 8' (2.4 M) PLAIN END PIPE
      MD-CS-10R - 10' (3.1 M) PLAIN END PIPE
   c. ROUND OR 60° ANGLE LEGS UP TO 16" OR 12" 90° ANGLE LEGS
      MDL-CS-6R - 6' (1.8 M) PLAIN END PIPE
      MDL-CS-8R - 8' (2.4 M) PLAIN END PIPE
      MDL-CS-10R - 10' (3.1 M) PLAIN END PIPE)

C MICROWAVE STRUT DISH MOUNT

MANUFACTURER: AVIAT
MODEL: ODU 600
DIMENSIONS: 10.4" x 10.4" x 4.9" (H x W x D)
WEIGHT: 11 LBS

BOTTOM VIEW

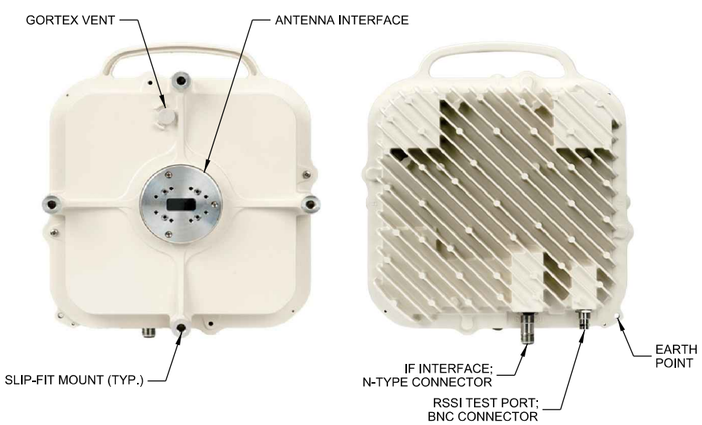

REAR VIEW FRONT VIEW

D OUTDOOR UNIT (ODU)

MANUFACTURER: AVIAT
MODEL: ECLIPSE POLE MOUNT (086-000000-101)

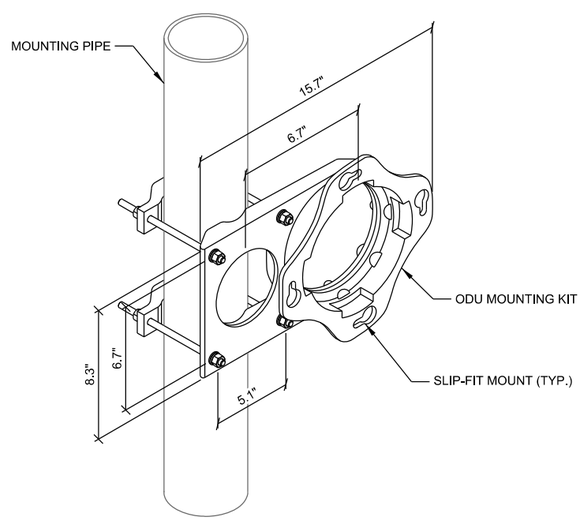

E OUTDOOR UNIT (ODU) MOUNTING

MANUFACTURER: AVIAT
MODEL: ECLIPSE COUPLER MOUNT PLATE

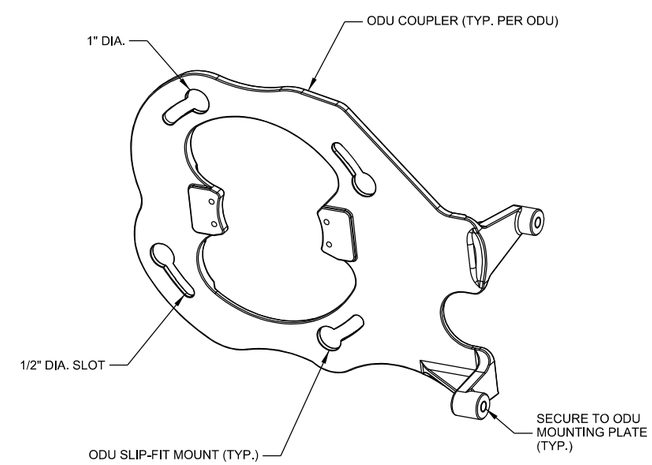

F DUAL OUTDOOR UNIT (ODU) COUPLER

CONSULTANT:

Edge
Consulting Engineers, Inc.
624 WATER STREET
PRAIRIE DU SAC, WI 53578
608.644.1449 VOICE
608.644.1549 FAX
www.edgeconsult.com
LICENSE NO.: C-4515

CLIENT:

U.S. Cellular

U.S. CELLULAR - OMAHA
10343 MILITARY AVENUE
OMAHA, NE 68134
PHONE: 402.515.4698

NORTH CAROLINA PROFESSIONAL SEAL 046428 ENGINEER ARLEN J. OSTRENG
12/3/2018

SHEET TITLE:

MICROWAVE DISH INSTALLATION DETAILS

WARDS CORNER (556591)
BURGAW, NORTH CAROLINA

SUBMITTAL:

INT.	DATE:	DESCRIPTION:
TJT	10/17/2018	LEASE EXHIBIT
TJT	10/24/2018	PRELIM CDS
TJT	12/03/2018	FINAL CDS

CHECKED BY	AB
PLOT DATE	12/3/2018
PROJECT NUMBER	18686
SET TYPE	FINAL CDs
SHEET NUMBER	T-506

k:\18600\18686\CAD\Construction_Drawings\Plot\T-506.dgn

© EDGE CONSULTING ENGINEERS, INC

EQUIPMENT:

- (A) LTE EQUIPMENT CABINET WITH MOUNTING PLINTH; SEE A-002 FOR DETAILS
- (B) BATTERY BACKUP CABINET; SEE A-002 FOR DETAILS
- (C) RAYCAP SPD SECURED TO ICE BRIDGE; SEE C-102 FOR QUANTITY
- (D) 12" x 12" x 6" FIBER/POWER JUNCTION BOX SECURED TO UNISTRUT
- (E) GROUND BAR ON INSULATORS

CONDUITS:

- (F) 1-1/4" (1.66" O.D.) SCH. 40 PVC CONDUIT STUB-UPS WITH PULL STRING TO FIBER VAULT (TYP. OF 2); STUB-UP CONDUITS IN FRONT CORNER OF COMPOUND FOR MICROWAVE DISH INSTALLATIONS
- (G) 2" (2-3/8" O.D.) SCH. 40 PVC CONDUIT STUB-UP WITH PULL STRING TO PPC
- (H) 1" (1-1/4" O.D.) SCH. 40 PVC CONDUIT STUB-UP TO WITH PULL STRING FOR ALARM CABLING TO PPC
- (I) 2-1/2" (2-7/8" O.D.) LIQUID-TIGHT FLEXIBLE METALLIC CONDUIT FROM LTE EQUIPMENT CABINET PLINTH TO JUNCTION BOX (TYP. OF 2)
- (J) 2-1/2" (2-7/8" O.D.) LIQUID-TIGHT FLEXIBLE METALLIC CONDUIT FROM BATTERY BACKUP CABINET TO LTE EQUIPMENT CABINET PLINTH FOR POWER
- (K) 2" (2-3/8" O.D.) LIQUID-TIGHT FLEXIBLE METALLIC CONDUIT FROM LTE EQUIPMENT CABINET TO UNISTRUT RACK FOR MICROWAVE DISH CABLING (IF APPLICABLE)
- (L) 1" (1-1/4" O.D.) LIQUID-TIGHT FLEXIBLE METALLIC CONDUIT FROM LTE EQUIPMENT CABINET PLINTH TO UNISTRUT RACK FOR GPS CABLING
- (M) 1-1/2" (1.9" O.D.) LIQUID-TIGHT FLEXIBLE METALLIC CONDUIT FROM JUNCTION BOX TO RAYCAP SPD FOR POWER CABLING (TYP. OF PER RAYCAP SPD)
- (N) 1-1/4" (1.66" O.D.) LIQUID-TIGHT FLEXIBLE METALLIC CONDUIT FROM JUNCTION BOX TO RAYCAP SPD FOR FIBER CABLING (TYP. OF PER RAYCAP SPD)
- (O) 3/4" (1" O.D.) LIQUID-TIGHT FLEXIBLE METALLIC CONDUIT FROM LTE EQUIPMENT CABINET FOR GROUND LEAD (TYP. OF 2)
- (P) 3/4" (1" O.D.) LIQUID-TIGHT FLEXIBLE METALLIC CONDUIT FROM BATTERY BACKUP CABINET FOR GROUND LEAD
- (Q) LIQUID-TIGHT CONDUIT FITTING (TYP.)
- (R) ROXTEC WEATHERPROOF SEAL (IF APPLICABLE); SIZE TO ACCEPT MICROWAVE DISH CABLING QUANTITY AND DIAMETER
- (S) 1'-0" UNISTRUT CONDUIT TIE DOWN (TYP.); SEE A-501 FOR DETAILS

EQUIPMENT PAD RACK:

- (T) 2'-0" WIDE x 5'-0" LONG ICE BRIDGE; SEE A-501 FOR DETAILS
- (U) P-1000T GALV. UNISTRUT OR APPROVED EQUIV.; UNISTRUT TO BE CUT TO LENGTH TO ENSURE PROPER FASTENING TO POST WITHOUT EXCESS
- (V) UNISTRUT END CAP AT EACH END OF UNISTRUT; SITE PRO 1 #: UNICAP OR APPROVED EQUIV.;
- (W) HYBRID CABLE; MAINTAIN MINIMUM BEND RADIUS
- (X) HEAVY-DUTY UNIVERSAL COAX SUPPORT BRACKET; SEE A-501 FOR DETAILS
- (Y) GPS ANTENNA SECURED TO ICE BRIDGE POST; SEE A-501 FOR DETAILS
- (Z) CONCRETE PIER; SEE A-501 FOR DETAILS

CONCRETE AND REINFORCING NOTES:

1. ALL CONCRETE CONSTRUCTION SHALL BE IN ACCORDANCE WITH LOCAL BUILDING CODE REQUIREMENTS AND MOST CURRENT VERSION OF ACI STANDARDS.
2. ALL CONCRETE UNLESS SPECIFICALLY NOTED SHALL BE NORMAL WEIGHT(145 PCF) AND SHALL ACHIEVE A 28-DAY COMPRESSIVE STRENGTH (f'c) OF 4,000 PSI. EXPOSED EXTERIOR CONCRETE TO BE AIR ENTRAINED WITH 6% +/- 1% AIR CONTENT. CONTRACTOR TO PERFORM CONCRETE SLUMP TEST (4" MAX SLUMP). NO WATER TO BE ADDED AFTER SLUMP HAS BEEN MEASURED.
3. ALL CONCRETE REINFORCING SHALL BE ASTM A615 GRADE 60 AND PLACED IN ACCORDANCE WITH ACI STANDARDS
4. REMOVE ALL ORGANIC MATERIAL, SOFT AND/OR UNSUITABLE SOILS WITHIN FOUNDATION FOOTPRINT. DO NOT UTILIZE THESE SOILS FOR BACKFILL.
5. CONSULT GEOTECHNICAL INVESTIGATION REPORT FOR ANTICIPATED SOIL CONDITIONS AND CONSTRUCTION CONSIDERATIONS.
6. FOUNDATION DESIGN BASED ON A PRESUMPTIVE SOIL BEARING CAPACITY OF 2000 PSF AND MAX. PLASTICITY INDEX OF 20, CONTRACTOR TO CONFIRM BEARING SOILS MEET THESE CONDITIONS BEFORE INSTALLATION.
7. SOILS NOT MEETING THE DESIGN BEARING STRENGTH SHALL BE UNDERCUT AND REPLACED WITH 3-INCH BREAKER STONE. UNDERCUT ONE FOOT ON EACH SIDE OF THE FOOTING FOR EVERY FOOT IN DEPTH. CONSULT WITH ENGINEER FOR REQUIRED UNDERCUT DEPTH.
8. CONTRACTOR TO ENSURE POSITIVE DRAINAGE FROM ALL FOUNDATIONS.

CONSULTANT:

Edge
Consulting Engineers, Inc.
624 WATER STREET
PRAIRIE DU SAC, WI 53578
608.644.1449 VOICE
608.644.1549 FAX
www.edgeconsult.com
LICENSE NO.: C-4515

CLIENT:

U.S. Cellular
U.S. CELLULAR - OMAHA
10343 MILITARY AVENUE
OMAHA, NE 68134
PHONE: 402.515.4698

NORTH CAROLINA PROFESSIONAL SEAL 046428 ENGINEER ARLEN J. OSTRENG
12/3/2018

SHEET TITLE:

EQUIPMENT PAD NOTES
WARDS CORNER (556591)
BURGAW, NORTH CAROLINA

SUBMITTAL:

INT.	DATE:	DESCRIPTION:
TJT	10/17/2018	LEASE EXHIBIT
TJT	10/24/2018	PRELIM CDS
TJT	12/03/2018	FINAL CDS

CHECKED BY	AB
PLOT DATE	12/3/2018
PROJECT NUMBER	18686
SET TYPE	FINAL CDs
SHEET NUMBER	A-001

k:\18600\18686\CAD\Construction_Drawings\Plot\A-001.dgn

© EDGE CONSULTING ENGINEERS, INC

DESCRIPTION: RADIO BASE STATION
MANUFACTURER: ERICSSON
MODEL: RBS 6120
DIMENSIONS: 60" x 27.56" x 27.56" (H x W x D)
WEIGHT: 837.8 LBS

CLEARANCE REQUIREMENTS:
FRONT: 47.24" (1200 mm)
REAR: 7.87" (200 mm)
LEFT: 3.94" (100 mm)
RIGHT: 3.94" (100 mm)

DESCRIPTION: GLOBAL BASE FRAME (GBF)
MANUFACTURER: ERICSSON
MODEL: 5/BYB 701 01
DIMENSIONS: 10.38" x 27.09" x 27.56" (H x W x D)
WEIGHT: 80.5 LBS

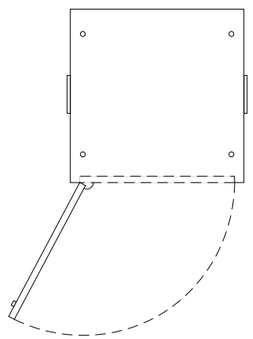

PLAN VIEW

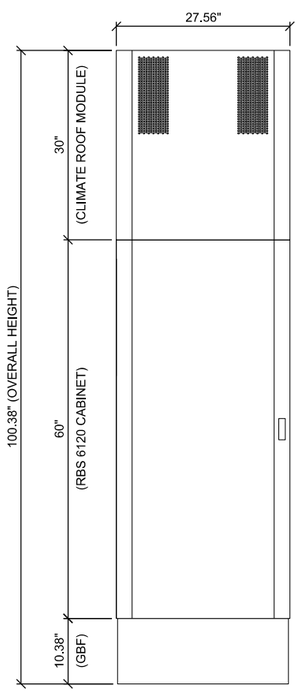

FRONT VIEW

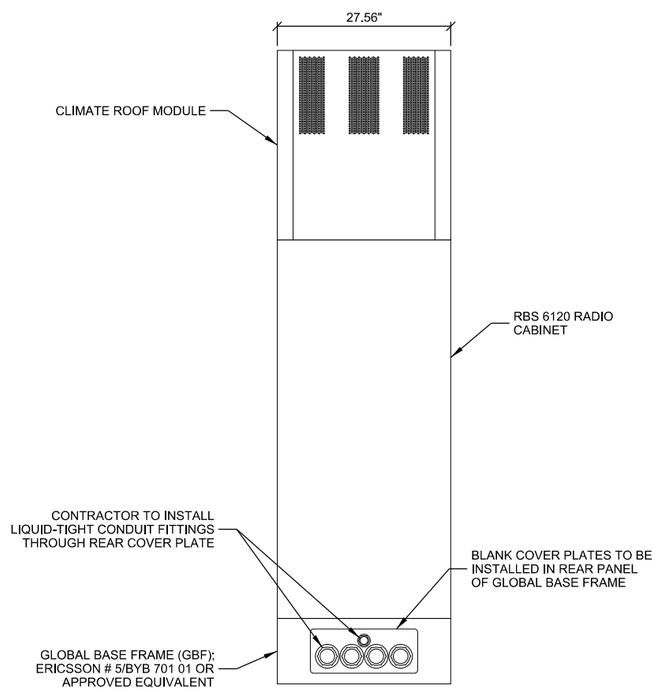

REAR VIEW

A EQUIPMENT CABINET

MANUFACTURER: ERICSSON
MODEL: B174
DIMENSIONS: 72.8 x 27.6" x 33.9" (H x W x D)
WEIGHT: 297.6 LBS (WITHOUT BATTERIES)
DESCRIPTION: A -48 V/840 Ah OUTDOOR BATTERY BACKUP SYSTEM

CLEARANCE REQUIREMENTS:
FRONT: 28" (700 mm)
REAR: 8" (200 mm)
LEFT: 39" (1000 mm)
RIGHT: 10" (250 mm)

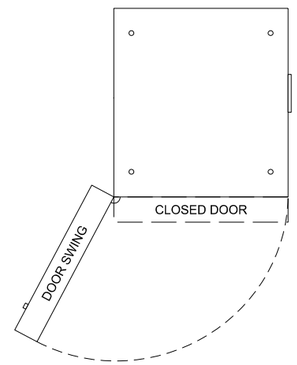

PLAN VIEW

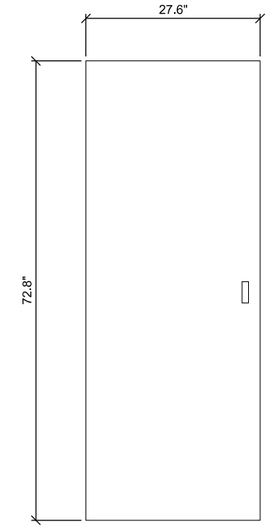

FRONT VIEW

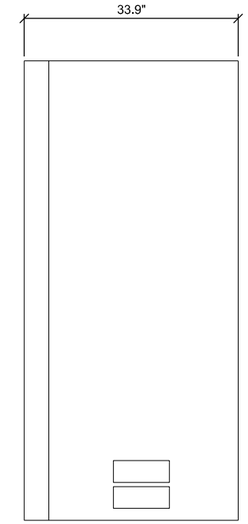

RIGHT SIDE VIEW

NOTES:

1. CONTRACTOR TO INSTALL 1/2" THICK SKIRTBOARD RUBBER MAT BENEATH CABINET; PAD TO HAVE A 1/2" SMALLER FOOTPRINT THAN THE CABINET, PERIMETER OF PAD TO BE SEALED WITH OUTDOOR GRADE 100% SILICONE CAULK.
2. ERICSSON IS RESPONSIBLE FOR FINAL INSTALLATION OF PROPOSED BBS 6101 BATTERY SYSTEM WITH ASSOCIATED PLUMBING AND EQUIPMENT.
3. CONTRACTOR TO VERIFY EQUIPMENT REQUIREMENTS WITH ERICSSON PRIOR TO INSTALLATION.

B BATTERY BACKUP SYSTEM

CONSULTANT:
Edge Consulting Engineers, Inc.
624 WATER STREET
PRAIRIE DU SAC, WI 53578
608.644.1449 VOICE
608.644.1549 FAX
www.edgeconsult.com
LICENSE NO.: C-4515

CLIENT:
U.S. Cellular
U.S. CELLULAR - OMAHA
10343 MILITARY AVENUE
OMAHA, NE 68134
PHONE: 402.515.4698

NORTH CAROLINA PROFESSIONAL SEAL 046428 ENGINEER ARLEN J. OSTRENG
12/3/2018

SHEET TITLE:
EQUIPMENT CABINET SPECIFICATIONS
WARDS CORNER (556591)
BURGAW, NORTH CAROLINA

SUBMITTAL:

INT.	DATE:	DESCRIPTION:
TJT	10/17/2018	LEASE EXHIBIT
TJT	10/24/2018	PRELIM CDS
TJT	12/03/2018	FINAL CDS

CHECKED BY	AB
PLOT DATE	12/3/2018
PROJECT NUMBER	18686
SET TYPE	FINAL CDs
SHEET NUMBER	A-002

k:\18600\18686\CAD\Construction_Drawings\Plot\A-002.dgn

© EDGE CONSULTING ENGINEERS, INC

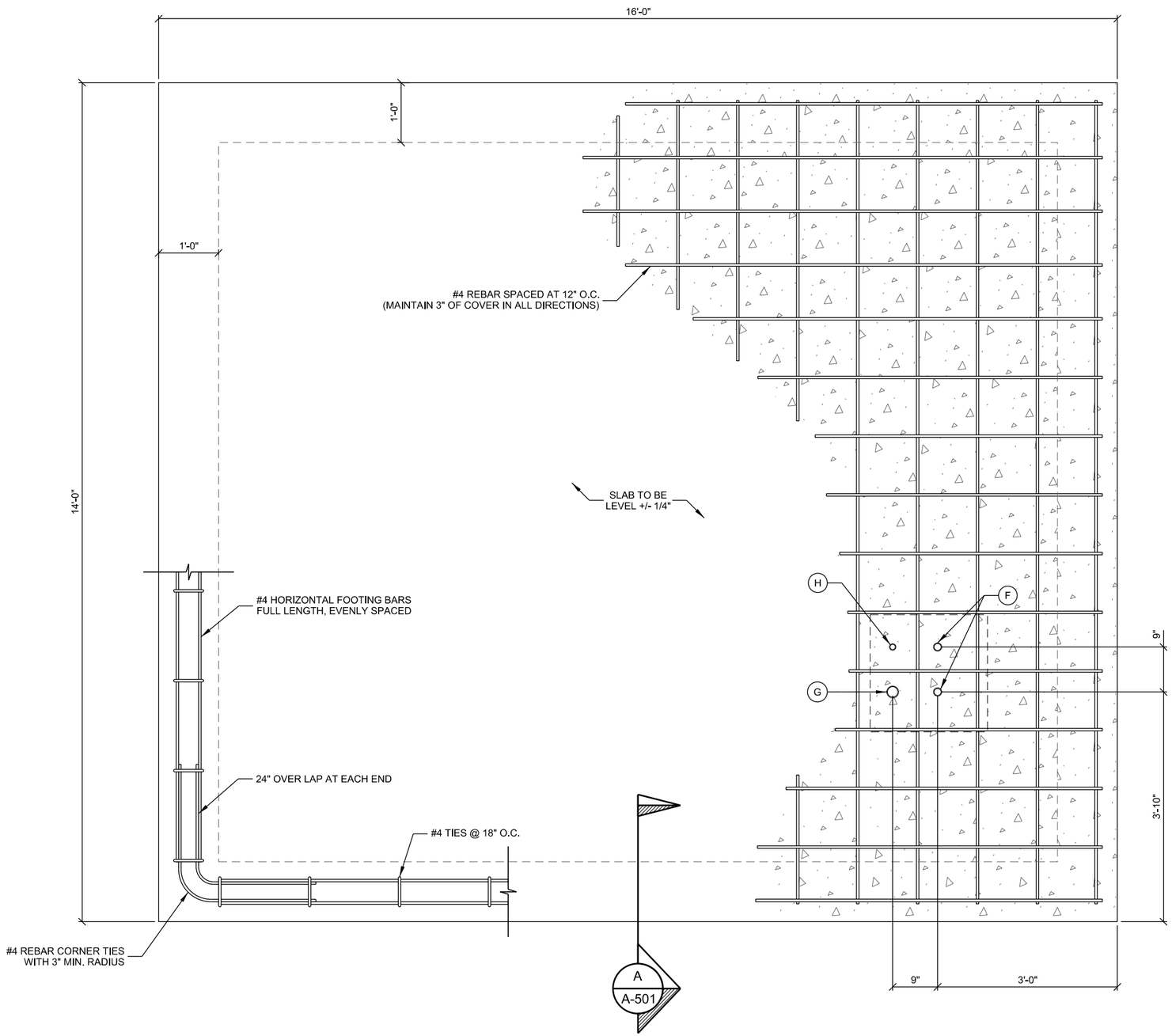

A EQUIPMENT LAYOUT

SCALE: 11" x 17" - 1/2" = 1'-0"
22" x 34" - 1" = 1'-0"

k:\18600\18686\CAD\Construction_Drawings\Plot\A-101.dgn

CONSULTANT:

Edge
Consulting Engineers, Inc.
624 WATER STREET
PRAIRIE DU SAC, WI 53578
608.644.1449 VOICE
608.644.1549 FAX
www.edgeconsult.com
LICENSE NO.: C-4515

CLIENT:

U.S. Cellular

U.S. CELLULAR - OMAHA
10343 MILITARY AVENUE
OMAHA, NE 68134
PHONE: 402.515.4698

NORTH CAROLINA PROFESSIONAL SEAL 046428 ENGINEER ARLEN J. OSTRENG

12/3/2018

SHEET TITLE:

EQUIPMENT PAD PLAN

WARDS CORNER (556591)
BURGAW, NORTH CAROLINA

SUBMITTAL:

INT.	DATE:	DESCRIPTION:
TJT	10/17/2018	LEASE EXHIBIT
TJT	10/24/2018	PRELIM CDS
TJT	12/03/2018	FINAL CDS

CHECKED BY	AB
PLOT DATE	12/3/2018
PROJECT NUMBER	18686
SET TYPE	FINAL CDs
SHEET NUMBER	A-101

© EDGE CONSULTING ENGINEERS, INC

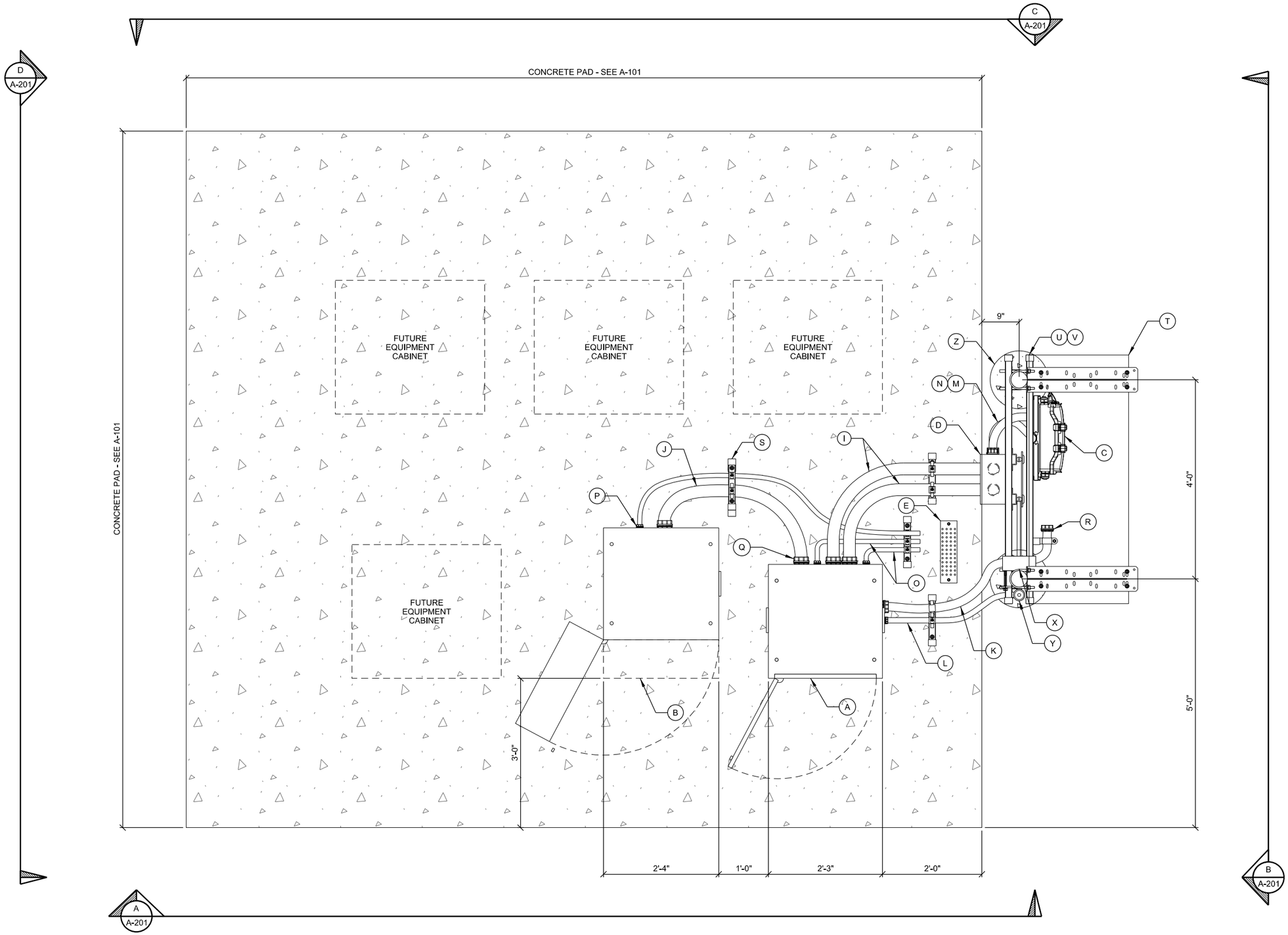

A EQUIPMENT LAYOUT

SCALE: 11" x 17" - 1/2" = 1'-0"
22" x 34" - 1" = 1'-0"

CONSULTANT:

Edge
Consulting Engineers, Inc.
624 WATER STREET
PRAIRIE DU SAC, WI 53578
608.644.1449 VOICE
608.644.1549 FAX
www.edgeconsult.com
LICENSE NO.: C-4515

CLIENT:

U.S. Cellular

U.S. CELLULAR - OMAHA
10343 MILITARY AVENUE
OMAHA, NE 68134
PHONE: 402.515.4698

NORTH CAROLINA PROFESSIONAL SEAL 046428 ENGINEER ARLEN J. OSTRENG

12/3/2018

EQUIPMENT PAD PLAN
WARDS CORNER (556591)
BURGAW, NORTH CAROLINA

SHEET TITLE:

SUBMITTAL:

INT.	DATE:	DESCRIPTION:
TJT	10/17/2018	LEASE EXHIBIT
TJT	10/24/2018	PRELIM CDS
TJT	12/03/2018	FINAL CDS

CHECKED BY	AB
PLOT DATE	12/3/2018
PROJECT NUMBER	18686
SET TYPE	FINAL CDs
SHEET NUMBER	A-102

I:\18600\18686\CAD\Construction_Drawings\Plot\A-102.dgn

© EDGE CONSULTING ENGINEERS, INC.

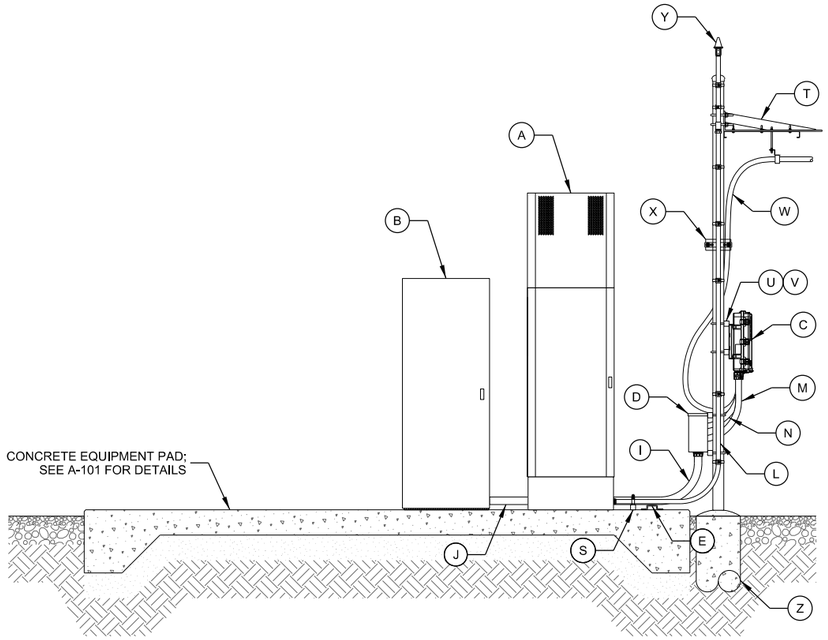

A **EQUIPMENT PAD ELEVATION**

SCALE: 11" x 17" - 1/4" = 1'-0"
22" x 34" - 1/2" = 1'-0"

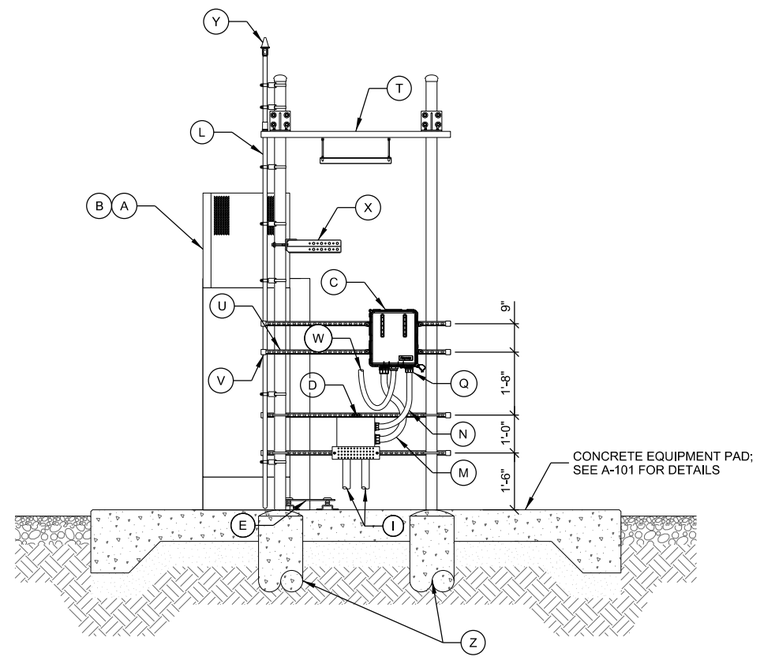

B **EQUIPMENT PAD ELEVATION**

SCALE: 11" x 17" - 1/4" = 1'-0"
22" x 34" - 1/2" = 1'-0"

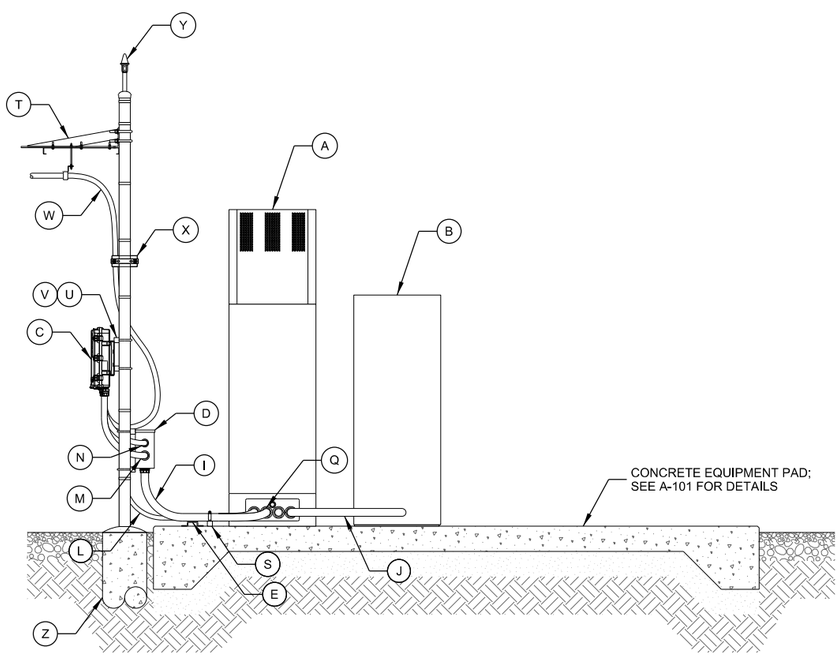

C **EQUIPMENT PAD ELEVATION**

SCALE: 11" x 17" - 1/4" = 1'-0"
22" x 34" - 1/2" = 1'-0"

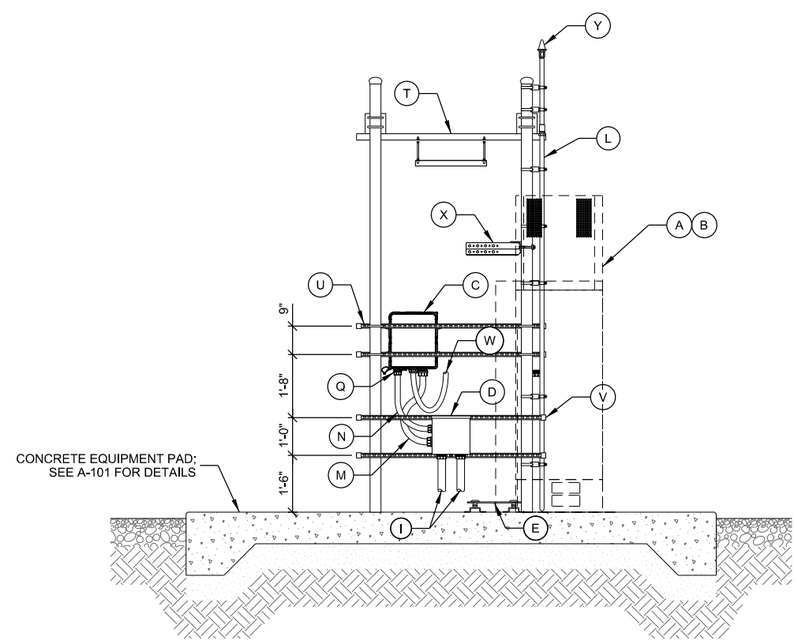

D **EQUIPMENT PAD ELEVATION**

SCALE: 11" x 17" - 1/4" = 1'-0"
22" x 34" - 1/2" = 1'-0"

CONSULTANT:

Edge
Consulting Engineers, Inc.
624 WATER STREET
PRAIRIE DU SAC, WI 53578
608.644.1449 VOICE
608.644.1549 FAX
www.edgeconsult.com
LICENSE NO.: C-4515

CLIENT:

U.S. Cellular

U.S. CELLULAR - OMAHA
10343 MILITARY AVENUE
OMAHA, NE 68134
PHONE: 402.515.4698

NORTH CAROLINA PROFESSIONAL SEAL 046428 ENGINEER ARLEN J. OSTRENG

12/3/2018

SHEET TITLE:

EQUIPMENT PAD ELEVATIONS
WARDS CORNER (556591)
BURGAW, NORTH CAROLINA

SUBMITTAL:

INT.	DATE:	DESCRIPTION:
TJT	10/17/2018	LEASE EXHIBIT
TJT	10/24/2018	PRELIM CDS
TJT	12/03/2018	FINAL CDS

CHECKED BY	AB
PLOT DATE	12/3/2018
PROJECT NUMBER	18686
SET TYPE	FINAL CDs
SHEET NUMBER	A-201

k:\18600\18686\CAD\Construction_Drawings\Plot\A-201.dgn

© EDGE CONSULTING ENGINEERS, INC.

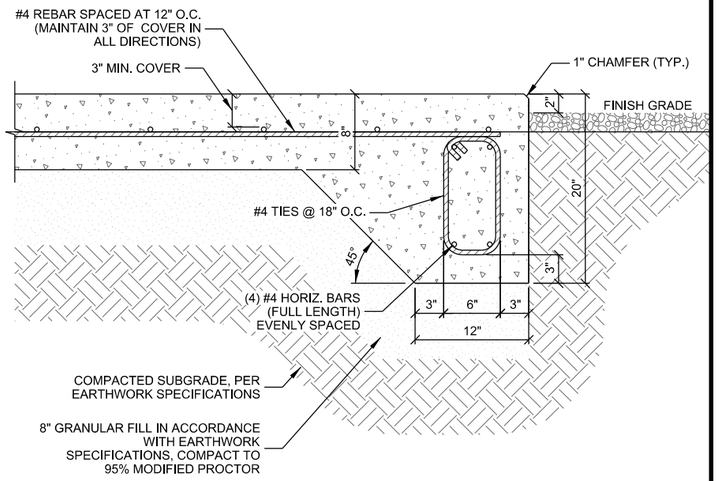

A TYPICAL FOUNDATION

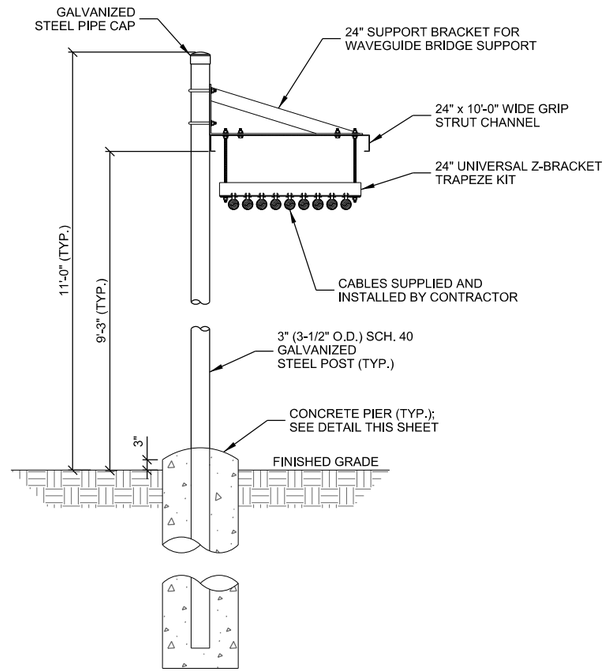

B ICE BRIDGE DETAILS

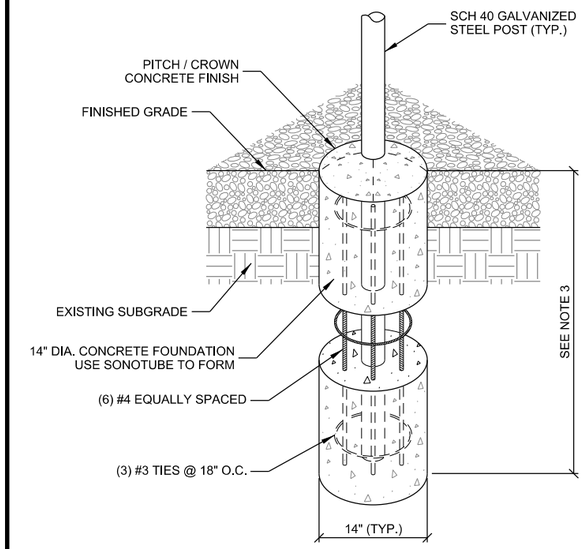

NOTES:

1. MAINTAIN 3" MINIMUM REBAR COVER WITH CONCRETE IN ALL DIRECTIONS.
2. CONCRETE MIX TO BE 4,000 PSI @ 28 DAYS.
3. FOUNDATION DEPTH TO EXCEED LOCAL FROST DEPTH, OR 48" MINIMUM.

C PIER FOUNDATION

MANUFACTURER: SITE PRO 1
MODEL: UTL8

HEAVY-DUTY UNIVERSAL SUPPORT BRACKET

MOUNTS TO ROUND MEMBERS (1-1/2" O.D. TO 5-1/2" O.D.)

PUNCHED WITH 3/4" DIA. HOLES FOR SNAP-IN HANGERS AND 7/16" DIA. HOLES FOR HARDWARE

HOT-DIP GALVANIZED

CAN BE BOLTED DIRECTLY TO PIROD KNOCK-DOWN LEGS WITH INCLUDED HARDWARE

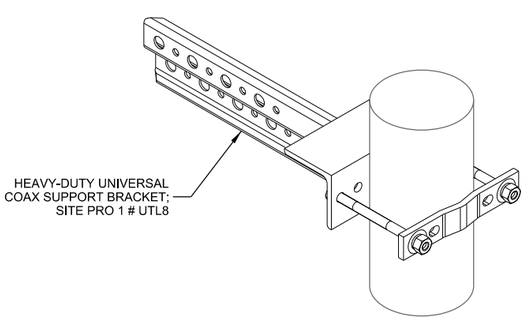

D HEAVY-DUTY UNIVERSAL COAX SUPPORT BRACKET

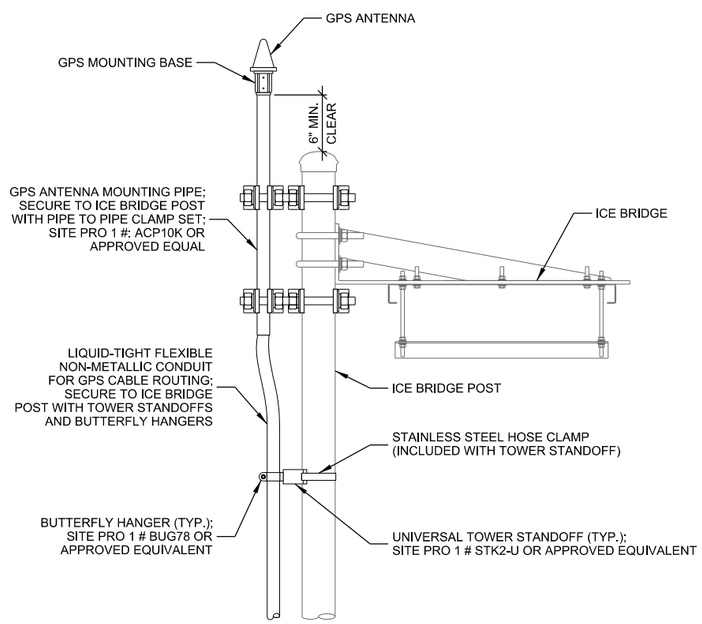

E GPS ANTENNA MOUNTING

THIS SPACE INTENTIONALLY LEFT BLANK

CONSULTANT:
Edge Consulting Engineers, Inc.
624 WATER STREET
PRAIRIE DU SAC, WI 53578
608.644.1449 VOICE
608.644.1549 FAX
www.edgeconsult.com
LICENSE NO.: C-4515

CLIENT:
U.S. Cellular
U.S. CELLULAR - OMAHA
10343 MILITARY AVENUE
OMAHA, NE 68134
PHONE: 402.515.4698

NORTH CAROLINA PROFESSIONAL SEAL 046428 ENGINEER ARLEN J. OSTRENG
12/3/2018

EQUIPMENT PAD DETAILS
WARDS CORNER (556591)
BURGAW, NORTH CAROLINA

SHEET TITLE:

SUBMITTAL:

INT.	DATE:	DESCRIPTION:
TJT	10/17/2018	LEASE EXHIBIT
TJT	10/24/2018	PRELIM CDS
TJT	12/03/2018	FINAL CDS

CHECKED BY	AB
PLOT DATE	12/3/2018
PROJECT NUMBER	18686
SET TYPE	FINAL CDs
SHEET NUMBER	A-501

K:\18600\18686\CAD\Construction_Drawings\Plot\A-501.dgn

© EDGE CONSULTING ENGINEERS, INC

KEYNOTES: (THIS SHEET)

- (A) TOWER GROUND RING, #2 SOLID TINNED COPPER
- (B) TOWER GROUND RING INSPECTION WELL; SEE E-502 FOR DETAIL
- (C) TOWER GROUND BAR (TGB) WITH (2) GROUNDS FROM TGB TO TOWER GROUND RING; SEE E-501 FOR DETAIL
- (D) GROUND LEAD FROM TOWER STEEL TO TOWER GROUND RING (TYP. OF 3); SEE E-501 FOR DETAIL
- (E) GROUND LEAD FROM TOWER GROUND RING TO CORNER FENCE POST (TYP.); SEE E-502 FOR DETAIL
- (F) GROUND LEAD FROM EQUIPMENT GROUND RING TO TOWER GROUND RING (TYP. OF 2), #2 SOLID TINNED COPPER
- (G) EQUIPMENT GROUND RING, #2 SOLID TINNED COPPER
- (H) EQUIPMENT GROUND RING INSPECTION WELL; SEE E-502 FOR DETAIL
- (I) GROUND LEAD FROM EQUIPMENT GROUND RING TO CORNER FENCE POST (TYP. OF 2); SEE E-502 FOR DETAIL
- (J) LTE EQUIPMENT CABINET GROUNDING: (1) LEAD FROM MASTER GROUND BAR TO GROUND BAR INSIDE RBS CABINET AND (1) LEAD FROM MASTER GROUND BAR TO RBS PLINTH, #2 INSULATED COPPER (TYP.); ROUTE THROUGH NEW PENETRATIONS AND LIQUID-TIGHT CONDUIT FITTINGS THROUGH BACK OF MOUNTING PLINTH
- (K) (1) GROUND LEAD FROM BATTERY CABINET STEEL TO MASTER GROUND BAR, #2 INSULATED COPPER; ROUTE IN LIQUID TIGHT FLEXIBLE NON-METALLIC CONDUIT BETWEEN BATTERY CABINET AND LTE CABINET AND OUT NEW PENETRATION THROUGH SIDE OF LTE CABINET PLINTH
- (L) MASTER GROUND BAR (MGB) MOUNTED HORIZONTALLY TO CONCRETE PAD ON INSULATORS; (2) GROUNDS FROM MGB TO EQUIPMENT GROUND RING; SEE E-501 FOR DETAIL
- (M) COLLECTOR GROUND BAR (CGB) MOUNTED TO UNISTRUT RACK ON INSULATORS; (2) CGB GROUNDS FROM CGB TO EQUIPMENT GROUND RING; SEE E-501 FOR JUNCTION BOX AND RAYCAP SPD GROUNDING DETAILS
- (N) GROUND LEAD FROM ICE BRIDGE POST TO TO BURIED GROUND RING (TYP.)
- (O) GROUND GPS UNIT TO ICE CANOPY POST
- (P) EXOTHERMIC CONNECTION AT FENCE CORNER (TYP.); SEE SHEET E-502 FOR DETAIL
- (Q) GROUND ROD (TYP.)
- (R) GROUND UTILITY RACK CABINETS AND POSTS (TYP.), #2 SOLID TINNED COPPER
- (S) GROUND ELECTRIC METER TO (2) INDEPENDENT GROUND RODS, SPACED 10' O.C. WITH #2 SOLID TINNED COPPER
- (T) GATE GROUND LEAD GROUND LEADS TO GATE POST; SEE E-502 FOR DETAIL
- (U) MAINTAIN 2' SEPARATION BETWEEN GROUND RINGS AND FOUNDATIONS (TYP.)

NOTES: (THIS SHEET)

1. ALL EXTERIOR GROUNDING SHALL MEET OR EXCEED THE CURRENT NEC AND NFPA 780 CODE.
2. THE GROUNDING SYSTEM & CONDUCTORS SHALL BE INSPECTED PRIOR TO BACK FILLING WITH RESULTS APPROVED BY THE CARRIER. THE SYSTEM SHALL PROVIDE 5 OHM OR LESS RESISTANCE UPON COMPLETION.
3. HIGH COMPRESSION TYPE CONNECTORS SHALL BE USED FOR SECONDARY GROUNDING CONDUCTOR TO MAIN GROUNDING CONDUCTOR CONNECTIONS. AFTER INSPECTION CONNECTIONS SHALL BE WRAPPED WITH ELECTRICAL VINYL TAPE.
4. ALL MECHANICAL CONNECTIONS SHALL INCLUDE ANTI-OXIDANT COMPOUND BETWEEN LUG & CONNECTION POINT. SCRAPE PAINT FROM OBJECT BEING CONNECTED TO. TOUCH UP PAINT ANY EXPOSED METAL AFTER CONNECTION IS INSTALLED.
5. GROUNDING CONDUCTORS SHALL MAINTAIN, TO THE EXTENT PRACTICAL, A HORIZONTAL OR DOWNWARD DIRECTION FREE FROM UP AND DOWN POCKETS. THE RADIUS OF BEND SHALL NOT BE LESS THAN 8" AND THE ANGLE OF ANY BEND SHALL NOT BE SHARPER (LESS) THAN 90°.
6. THE MAXIMUM HORIZONTAL AND VERTICAL SPACING BETWEEN GROUNDING CONDUCTOR (NOT IN CONDUIT) SUPPORTS SHALL NOT EXCEED 4 FT.
7. IF A GROUNDING CONDUCTOR IS INSTALLED IN FERROUS METAL CONDUITS, THE CONDUCTOR SHALL BE BONDED TO THE TOP AND BOTTOM OF THE CONDUIT.
8. ALL NON-INSULATED GROUND LEADS EXTENDING ABOVE GROUND LEVEL SHALL BE ENCASED IN 3/4" PVC & SEALED WITH SILICONE ON BOTH ENDS.
9. ALL CADWELD CONNECTIONS SHALL BE COATED WITH ZINGA TO PREVENT CORROSION.
10. GROUND RINGS & TOP OF RODS SHALL BE INSTALLED AT 30" BELOW FINISHED GRADE.
11. INSTALL 18" x 18" COPPER PLATES IN LIEU OF GROUND RODS WHEN INSTALLING OVER TOWER FOUNDATION OR WHERE DRIVING GROUND RODS IS NOT FEASIBLE. REFER TO GEOTECH REPORT FOR SOIL CONDITIONS.

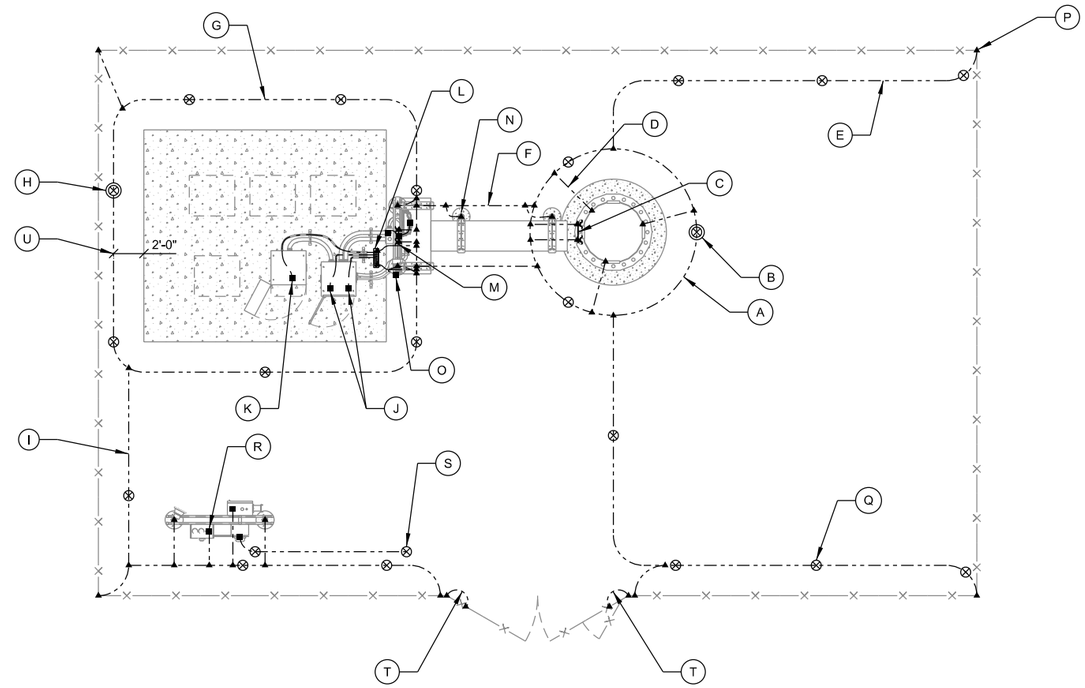

GROUNDING LEGEND: (THIS SHEET)

- ▲ EXOTHERMIC OR UL RATED IRREVERSIBLE CONNECTION
- ■ MECHANICAL CONNECTION
- — - - GROUND LEAD
- ⊗ GROUND INSPECTION WELL
- ⊗ COPPER CLAD GROUND ROD, (3/4" DIA. x 10' LONG) SPACE @ 10' O.C. MAX.
- ⊗ COPPER PLATE, (18" x 18" x .032" THK) SPACE @ 10' O.C. MAX.

5' 0 5' 10'

SCALE: 11" x 17" - 1" = 10'
22" x 34" - 1" = 5'

CONSULTANT:

Edge
Consulting Engineers, Inc.
624 WATER STREET
PRAIRIE DU SAC, WI 53578
608.644.1449 VOICE
608.644.1549 FAX
www.edgeconsult.com
LICENSE NO.: C-4515

CLIENT:

U.S. Cellular
U.S. CELLULAR - OMAHA
10343 MILITARY AVENUE
OMAHA, NE 68134
PHONE: 402.515.4698

NORTH CAROLINA PROFESSIONAL SEAL 046428 ENGINEER ARLEN J. OSTRENG
12/3/2018

GROUNDING PLAN
WARDS CORNER (556591)
BURGAW, NORTH CAROLINA

SHEET TITLE:

SUBMITTAL:

INT.	DATE:	DESCRIPTION:
TJT	10/17/2018	LEASE EXHIBIT
TJT	10/24/2018	PRELIM CDS
TJT	12/03/2018	FINAL CDS

CHECKED BY	AB
PLOT DATE	12/3/2018
PROJECT NUMBER	18686
SET TYPE	FINAL CDs
SHEET NUMBER	E-101

k:\18600\18686\CAD\Construction_Drawings\Plot\E-101.dgn

© EDGE CONSULTING ENGINEERS, INC

KEYNOTES: (THIS SHEET)

- (A) WEATHERPROOF CABLE GROUND KIT
- (B) GROUND KIT #6 STRANDED INSULATED JUMPER CONNECTION TO GROUND BAR WITH 2 HOLE LONG BARREL LUG
- (C) ANTENNA GROUND BAR FOR CONNECTION OF MULTIPLE GROUND KITS AT ONE LEVEL MOUNT TO TOWER STEEL
- (D) FOR SINGLE ANTENNA AT ONE LEVEL OMIT ANTENNA GROUND BAR CONNECT GROUND KIT JUMPER DIRECTLY TO TOWER STEEL WITH UL LISTED BONDING CLAMP
- (E) UL LISTED BONDING CLAMP CABLE TO FLAT METAL BONDING CLAMP
- (F) TOWER GROUND BAR (TGB) INSTALLED ON TOWER (SEE DETAIL TO RIGHT); FOR LATTICE TOWERS, MOUNT TGB DIAGONALLY AT 12" ABOVE ICE BRIDGE FOR EASIER HOOK-UP OF GROUNDING KIT LEADS
- (G) TGB GROUNDS #2 SOLID TINNED COPPER ENCASED IN LIQUID-TIGHT FLEXIBLE NON-METALLIC CONDUIT TO 24" BELOW GRADE FROM TGB TO TOWER GROUND RING (2) REQ'D
- (H) TOWER STEEL GROUNDS (IF APPLICABLE) #2 SOLID TINNED COPPER ENCASED IN LIQUID-TIGHT FLEXIBLE NON-METALLIC CONDUIT TO 24" BELOW GRADE FROM TOWER STEEL TO TOWER GROUND RING (3) REQ'D (USE GROUNDING TABS WHEN AVAILABLE)
- (I) COLLECTOR GROUND BAR (CGB) MOUNTED TO UNISTRUT RACK ON INSULATORS; (2) CGB #2 SOLID TINNED COPPER GROUNDS ENCASED IN LIQUID-TIGHT FLEXIBLE NON-METALLIC CONDUIT TO 24" BELOW GRADE FROM CGB TO EQUIPMENT GROUND RING
- (J) MASTER GROUND BAR (MGB) MOUNTED HORIZONTALLY TO CONCRETE PAD ON INSULATORS; (2) #2 SOLID TINNED COPPER GROUNDS ENCASED IN LIQUID-TIGHT FLEXIBLE NON-METALLIC CONDUIT TO 24" BELOW GRADE FROM MGB TO EQUIPMENT GROUND RING
- (K) RAYCAP SPD AND JUNCTION BOX TO BE BONDED TO CGB WITH #6 STRANDED GREEN INSULATED
- (L) SECURE GPS TO ICE CANOPY POST WITH UL LISTED PIPE CLAMP; BOND WITH #2 SOLID TINNED COPPER LEAD
- (M) ICE BRIDGE POST GROUND #2 SOLID TINNED COPPER ENCASED IN LIQUID-TIGHT FLEXIBLE NON-METALLIC CONDUIT TO 24" BELOW GRADE
- (N) ICE BRIDGE SECTION GROUNDS #2 STRANDED INSULATED WITH 2 HOLE LONG BARREL ON EACH END (TYP.)
- (O) ICE BRIDGE SECTION TO POST GROUNDS #2 STRANDED INSULATED WITH 2 HOLE LONG BARREL ON SECTION; ORIENT LEAD WITH HIGH SIDE TOWARDS TOWER

GROUNDING LEGEND: (THIS SHEET)

- ▲ EXOTHERMIC OR UL RATED IRREVERSIBLE CONNECTION
- ■ MECHANICAL CONNECTION
- — - - GROUND LEAD

NOTES: (THIS SHEET)

1. ALL BELOW-GRADE CONNECTIONS ARE TO BE EXOTHERMICALLY WELDED A MINIMUM OF 30" BELOW GRADE.
2. ALL LEADS EXTENDING ABOVE GRADE TO BE ENCASED IN 3/4" CONDUIT AND EXTEND A MINIMUM OF 6" ABOVE FINISHED GRADE AND 24" BELOW FINISHED GRADE.
3. COAT ALL EXOTHERMICALLY WELDED CONNECTIONS WITH ZINGA.
4. APPLY ANTI OXIDANT COMPOUND TO ALL MECHANICAL CONNECTIONS.
5. UPPER AND LOWER TOWER GROUND BARS TO BE BONDED DIRECTLY TO TOWER STEEL WITH #2 CONDUCTORS.
6. AIR TERMINAL TO EXTEND 2' ABOVE HIGHEST ANTENNA MIN. ON MAST PIPE MECHANICALLY FASTEN AIR TERMINAL TO MAST PIPE MAST PIPE TO BE MECHANICALLY CONNECTED TO TOWER STEEL

NOTE:

AIR TERMINAL TO EXTEND 2' ABOVE HIGHEST ANTENNA MIN. ON MAST PIPE MECHANICALLY FASTEN AIR TERMINAL TO MAST PIPE MAST PIPE TO BE MECHANICALLY CONNECTED TO TOWER STEEL

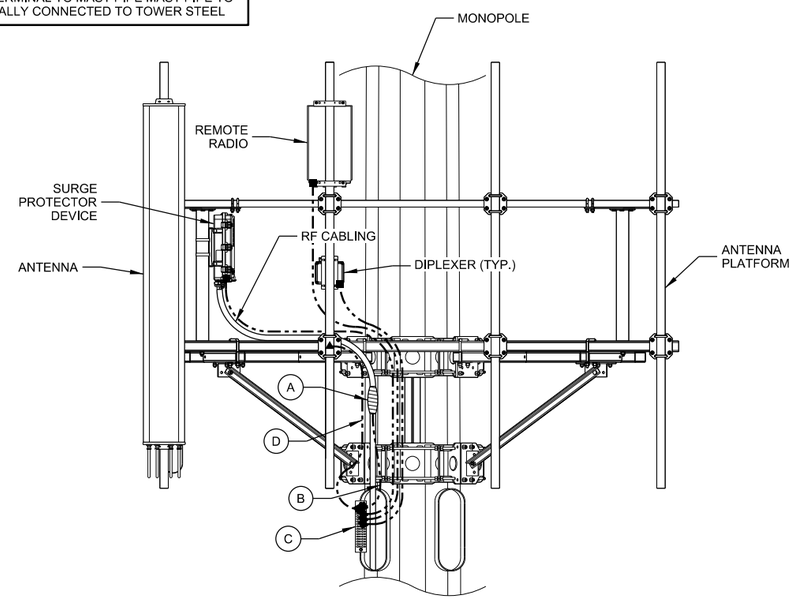

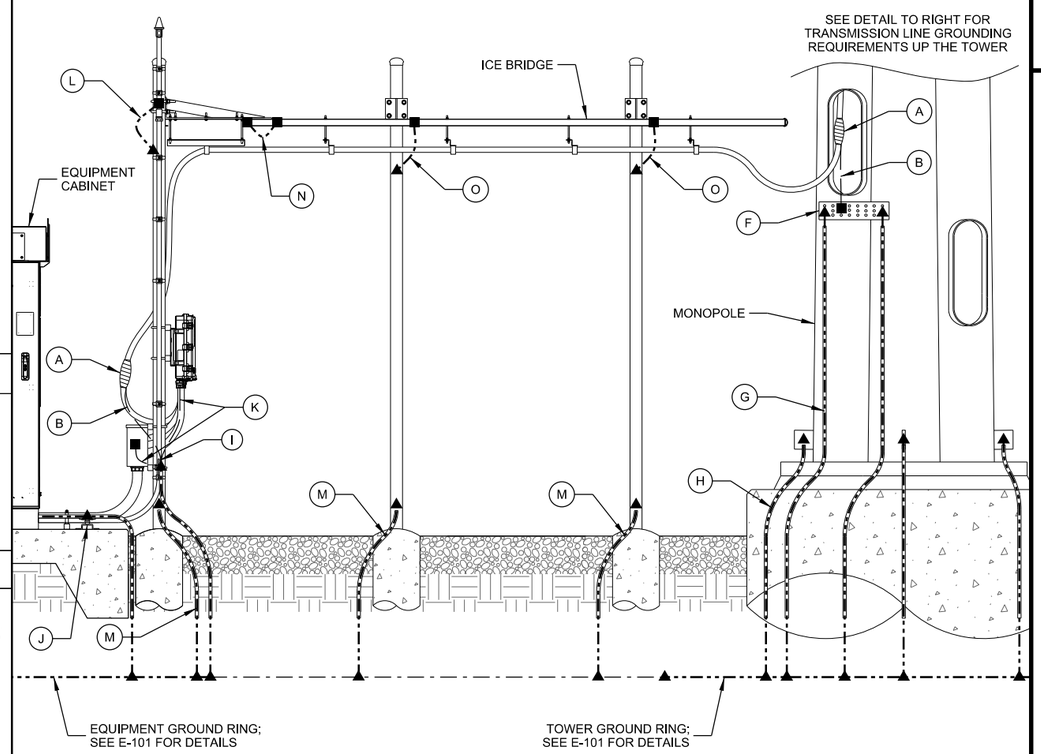

A GROUNDING DETAILS

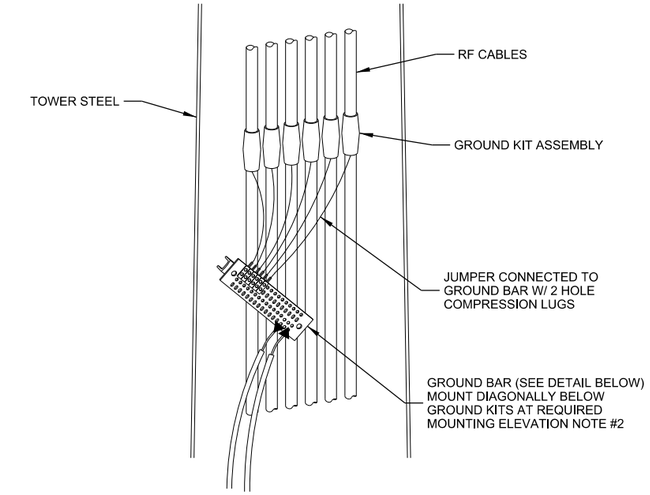

NOTES:

1. INSTALL GROUND KITS ON EACH TRANSMISSION LINE IN THE FOLLOWING LOCATIONS:
   A. ANTENNA / DISH LEVEL
   B. AT 75 FOOT MAX INTERVALS FROM ANTENNA LEVEL TO BASE OF TOWER
   C. TOWER BASE
   D. COLLECTOR GROUND BAR / GROUND LEVEL
2. INSTALL ANTENNA GROUND BARS AT EACH ANTENNA TIER LEVEL FOR CONNECTION OF MULTIPLE ANTENNAS AT EACH LEVEL. WHEN ONLY ONE ANTENNA IS INSTALLED AT A LEVEL.

B CABLING GROUND KITS

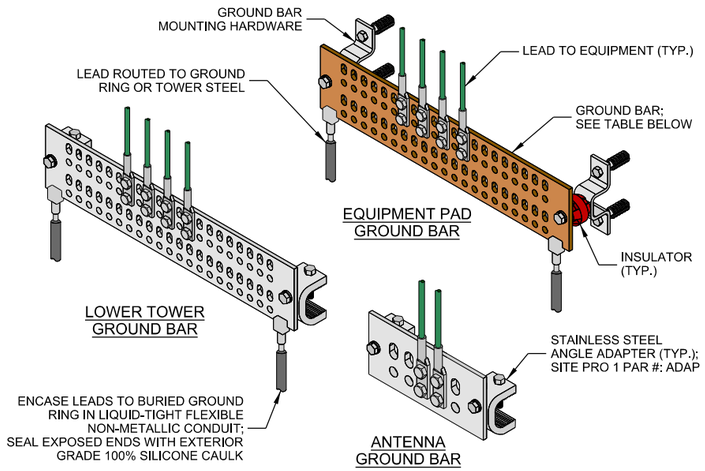

GROUND BAR SCHEDULE:	
EQUIPMENT PAD GROUND BAR	1/4" x 4" x 18" GROUND BAR WITH INSULATORS AND BRACKETS; SIZED FOR 42 SETS OF 2-HOLE LUGS SITE PRO PART #: MG418-U-K OR EQUIVALENT
LOWER TOWER GROUND BAR	1/4" x 4" x 18" GROUND BAR; SIZED FOR 42 SETS OF 2-HOLE LUGS SITE PRO PART #: TINMG418-U OR EQUIVALENT
ANTENNA GROUND BAR	1/4" x 2" x 6" GROUND BAR SIZED FOR 5 SETS OF 2-HOLE LUGS SITE PRO PART #: TINMG206U OR EQUIVALENT

C GROUND BAR

CONSULTANT:
Edge Consulting Engineers, Inc.
624 WATER STREET
PRAIRIE DU SAC, WI 53578
608.644.1449 VOICE
608.644.1549 FAX
www.edgeconsult.com
LICENSE NO.: C-4515

CLIENT:
U.S. Cellular
U.S. CELLULAR - OMAHA
10343 MILITARY AVENUE
OMAHA, NE 68134
PHONE: 402.515.4698

NORTH CAROLINA PROFESSIONAL SEAL 046428 ENGINEER ARLEN J. OSTRENG
12/3/2018

GROUNDING DETAILS
WARDS CORNER (556591)
BURGAW, NORTH CAROLINA

SHEET TITLE:

SUBMITTAL:

INT.	DATE:	DESCRIPTION:
TJT	10/17/2018	LEASE EXHIBIT
TJT	10/24/2018	PRELIM CDS
TJT	12/03/2018	FINAL CDS

CHECKED BY	AB
PLOT DATE	12/3/2018
PROJECT NUMBER	18686
SET TYPE	FINAL CDs
SHEET NUMBER	E-501

I:\18600\18686\CAD\Construction_Drawings\Plot\E-501.dgn

© EDGE CONSULTING ENGINEERS, INC.

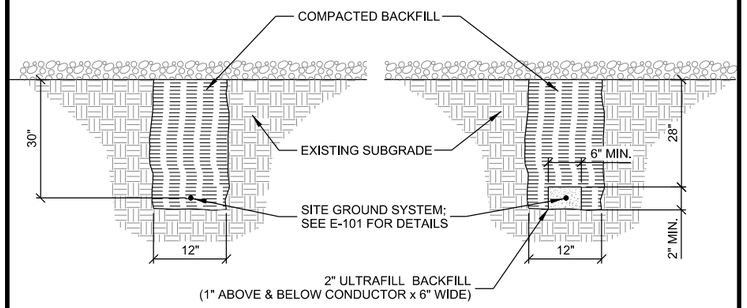

STANDARD GROUND TRENCH

ENHANCED GROUND TRENCH

NOTES:

1. GROUNDING TRENCHES TO BE BACK FILLED WITH NATIVE SOIL.
2. COMPACT BACK FILL TO 95% MODIFIED PROCTOR.
3. CONTACT PSC MINIMUM 24HRS NOTICE PRIOR TO BACK FILLING TO ALLOW FOR INSPECTION.

A GROUND TRENCH

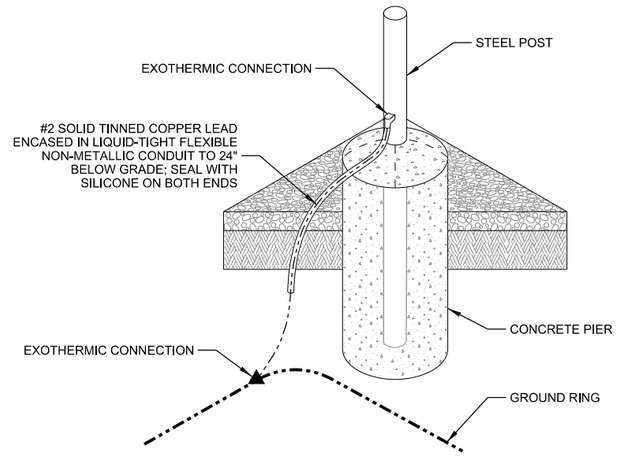

B POST GROUNDING

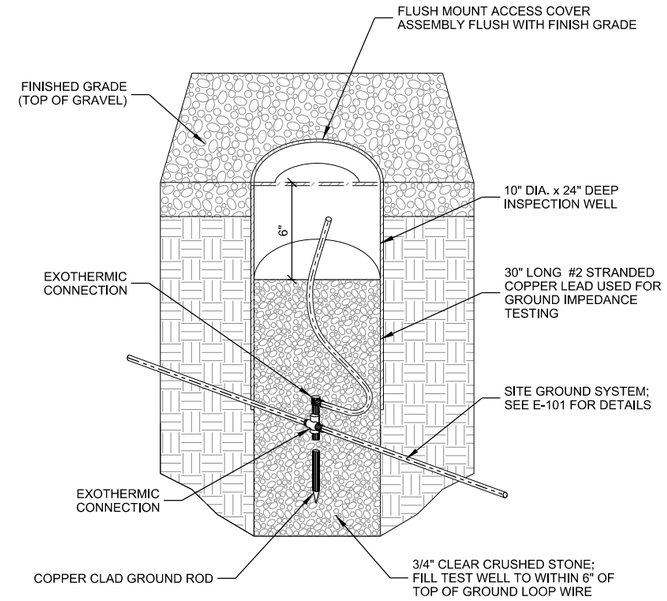

C INSPECTION WELL

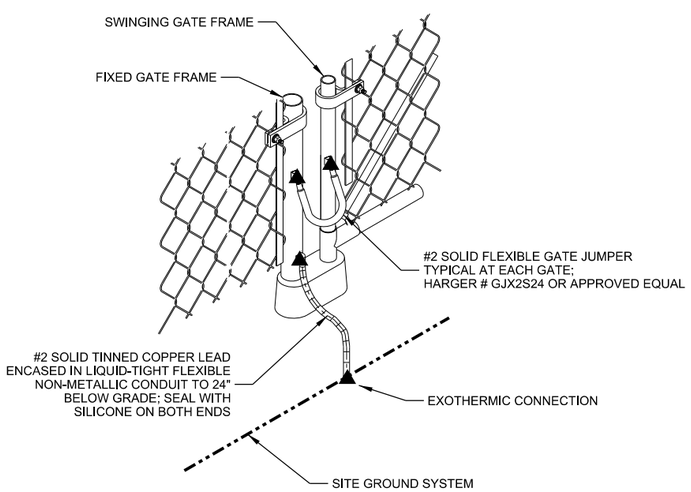

D FENCE GATE GROUNDING

THIS SPACE INTENTIONALLY LEFT BLANK

CONSULTANT:

Edge
Consulting Engineers, Inc.
624 WATER STREET
PRAIRIE DU SAC, WI 53578
608.644.1449 VOICE
608.644.1549 FAX
www.edgeconsult.com
LICENSE NO.: C-4515

CLIENT:

U.S. Cellular
U.S. CELLULAR - OMAHA
10343 MILITARY AVENUE
OMAHA, NE 68134
PHONE: 402.515.4698

NORTH CAROLINA PROFESSIONAL SEAL 046428 ENGINEER ARLEN J. OSTRENG
12/3/2018

GROUNDING DETAILS
WARDS CORNER (556591)
BURGAW, NORTH CAROLINA

SHEET TITLE:

SUBMITTAL:

INT.	DATE:	DESCRIPTION:
TJT	10/17/2018	LEASE EXHIBIT
TJT	10/24/2018	PRELIM CDS
TJT	12/03/2018	FINAL CDS

CHECKED BY	AB
PLOT DATE	12/3/2018
PROJECT NUMBER	18686
SET TYPE	FINAL CDs
SHEET NUMBER	E-502

© EDGE CONSULTING ENGINEERS, INC.

k:\18600\18686\CAD\Construction_Drawings\Plot\E-502.dgn

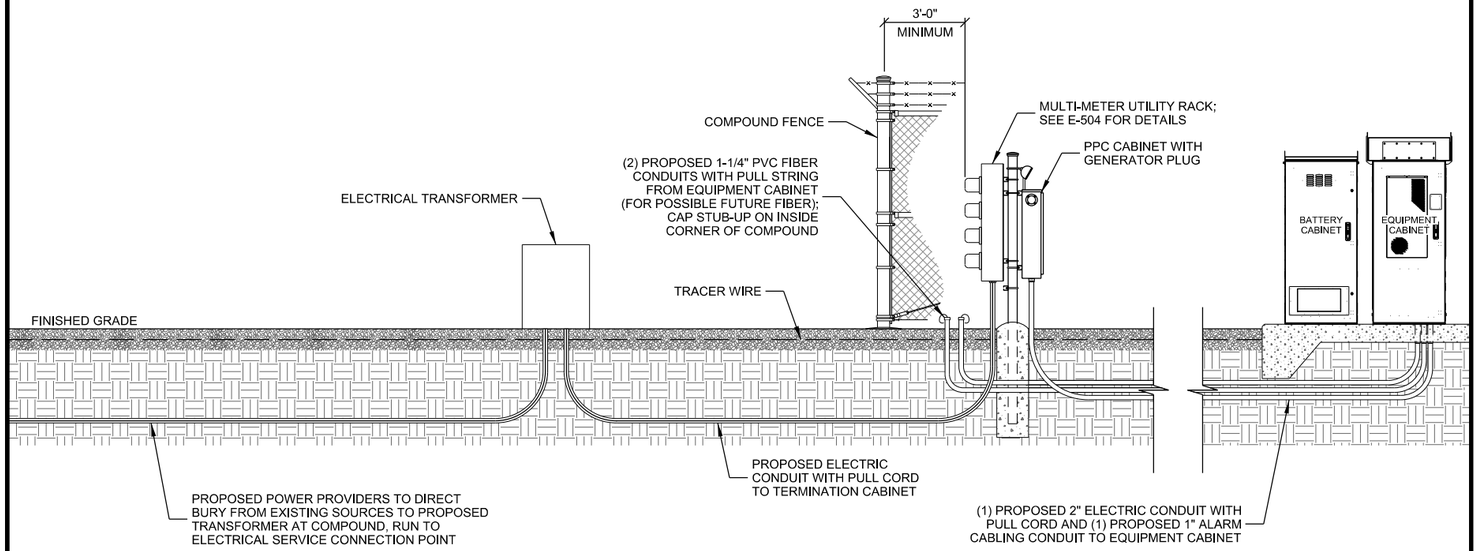

NOTE:

1. INSTALL IN ACCORDANCE WITH LOCAL CODES AND UTILITY COMPANY REQUIREMENTS.
2. ALL UNDERGROUND CONDUITS TO BE SCH. 40 PVC UNLESS OTHERWISE NOTED.

A UNDERGROUND UTILITIES

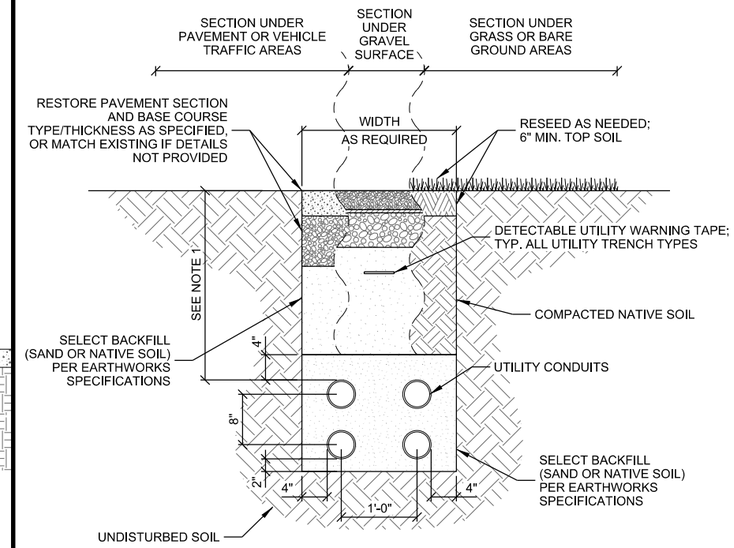

NOTES:

1. UTILITY CONDUITS TO BE BURIED A MINIMUM DEPTH OF 42" BELOW GROUND LEVEL OR 6" BELOW THE FROST LINE.

C UTILITY TRENCH

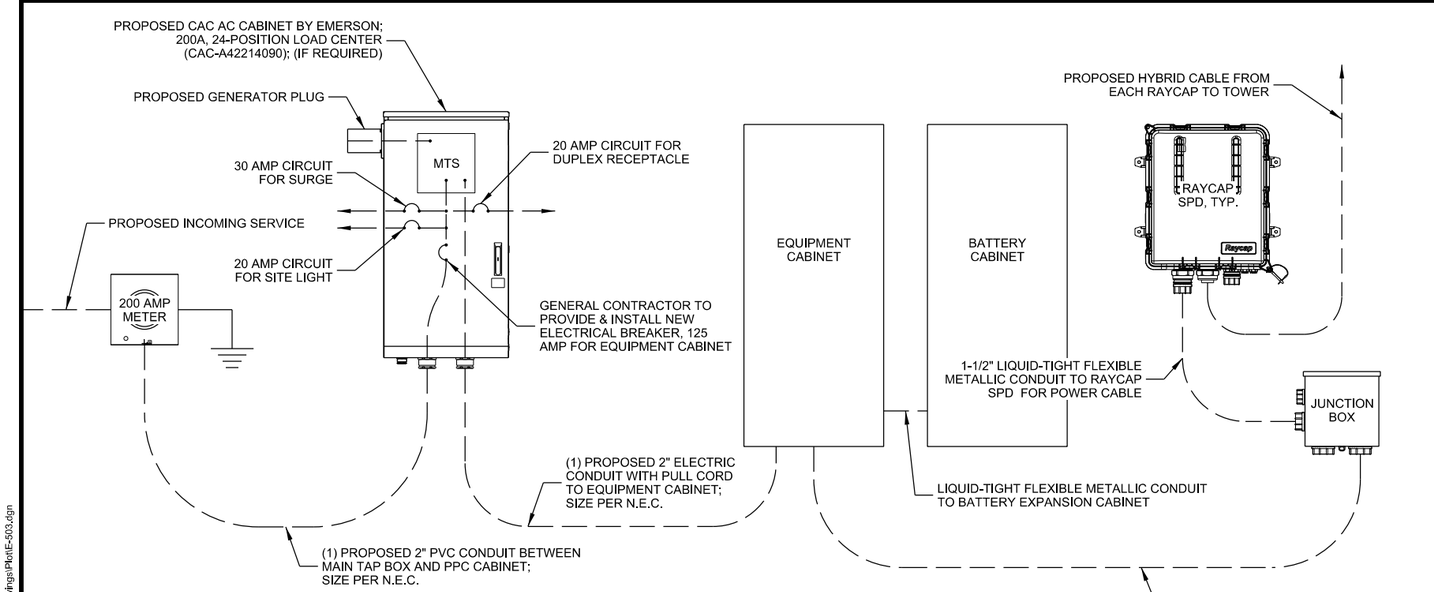

ELECTRICAL NOTES:

1. REFER TO MANUFACTURER RECOMMENDATIONS AND SPECIFICATIONS FOR INTERNAL WIRING VERIFICATION.
2. PROVIDE 100 AMP SERVICE AT ENTRANCE RATED DISCONNECT IF NOT ALREADY EXISTING, REPLACE EXISTING 200 AMP DISCONNECT WITH 100 AMP SERVICE ENTRANCE RATED DISCONNECT IF APPLICABLE.

B ONE-LINE DIAGRAM

THIS SPACE INTENTIONALLY LEFT BLANK

CONSULTANT:

Edge
Consulting Engineers, Inc.
624 WATER STREET
PRAIRIE DU SAC, WI 53578
608.644.1449 VOICE
608.644.1549 FAX
www.edgeconsult.com
LICENSE NO.: C-4515

CLIENT:

U.S. Cellular
U.S. CELLULAR - OMAHA
10343 MILITARY AVENUE
OMAHA, NE 68134
PHONE: 402.515.4698

NORTH CAROLINA PROFESSIONAL SEAL 046428 ENGINEER ARLEN J. OSTRENG
12/3/2018

UTILITY DETAILS
WARDS CORNER (556591)
BURGAW, NORTH CAROLINA

SHEET TITLE:

SUBMITTAL:

INT.	DATE:	DESCRIPTION:
TJT	10/17/2018	LEASE EXHIBIT
TJT	10/24/2018	PRELIM CDS
TJT	12/03/2018	FINAL CDS

CHECKED BY	AB
PLOT DATE	12/3/2018
PROJECT NUMBER	18686
SET TYPE	FINAL CDs
SHEET NUMBER	E-503

I:\18600\18686\CAD\Construction_Drawings\Plot\E-503.dgn

© EDGE CONSULTING ENGINEERS, INC

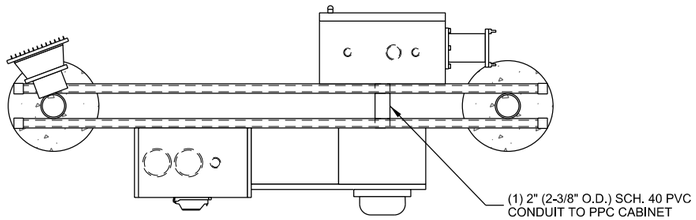

PLAN VIEW

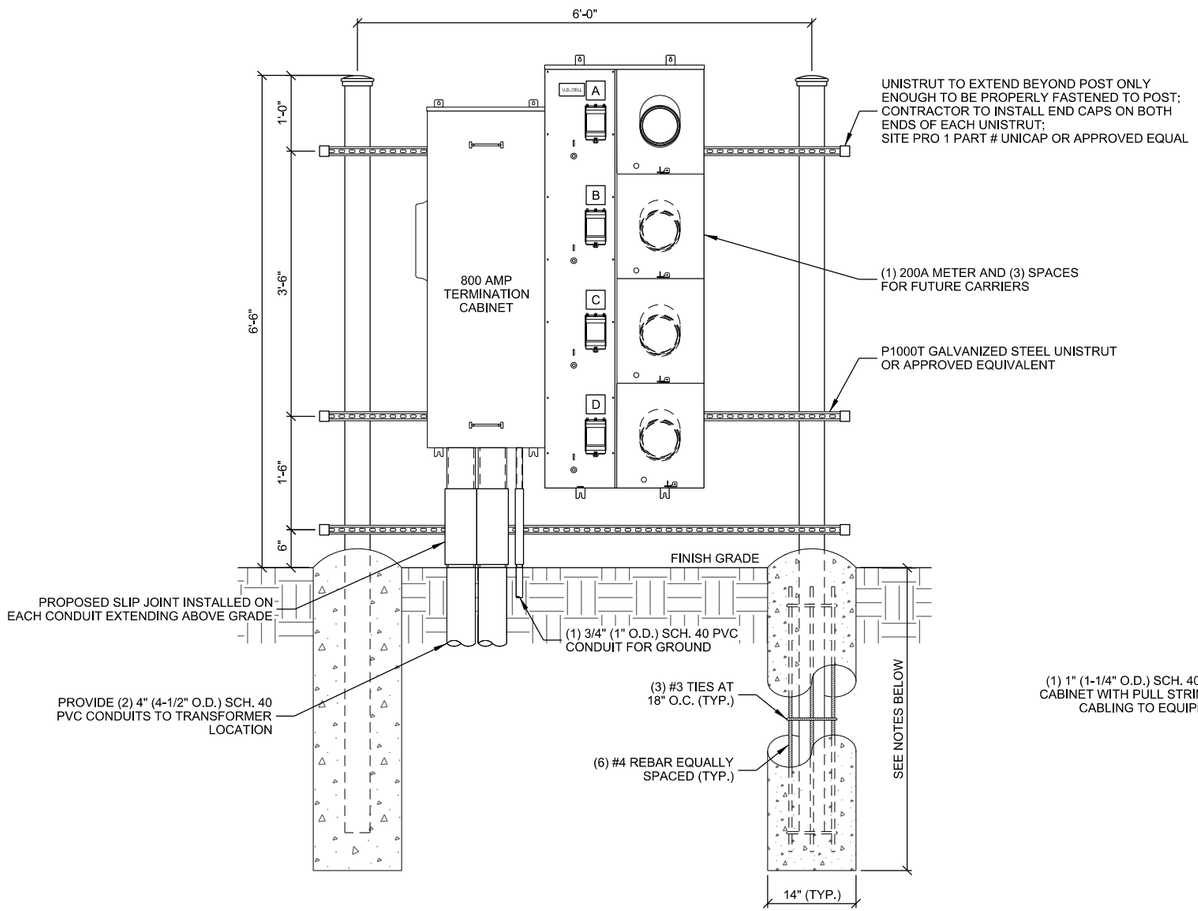

FRONT - ELECTRICAL SIDE

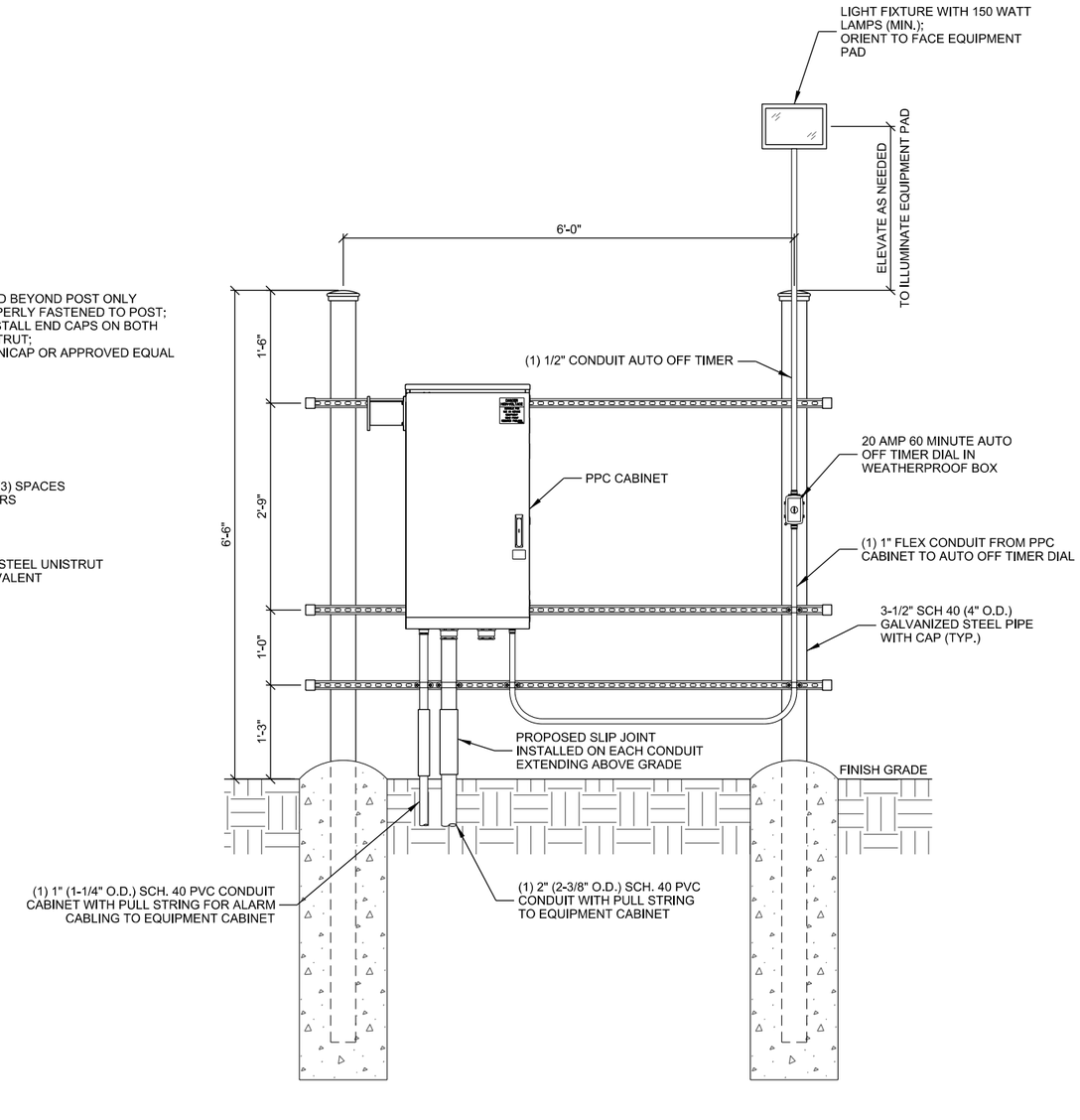

REAR - PPC SIDE

NOTE:

1. CONTRACTOR TO INSTALL PVC CONDUITS FOR SERVICE LATERAL CONNECTION TO UTILITY.
2. CONTRACTOR TO EXTEND CONDUITS UNDERGRUOND BEYOND FENCELINE TO TRANSFORMER. CAP ENDS (NO DUCT TAPE ALLOWED) AND STAKE, EQUIP WITH PULL CORD, VERIFY REQUIREMENTS W/UTILITY PROVIDER.
3. CONTRACTOR TO MARK CARRIER METER SLOT @ BREAKER OR SOCKET EXTERIOR.
4. SQD EZ METER PAK, 120/240 VAC 1 PHASE, 3 WIRE OR EQUIV.,VERIFY REQUIREMENTS WITH UTILITY PROVIDER
5. FINAL LAYOUT AND DESIGN DETERMINED BY CONTRACTOR/UTILITY, VERIFY FINAL DESIGN WITH U.S. CELLULAR.
6. CONCRETE FOR PIER TO BE A MINIMUM OF 4,000 PSI AT 28 DAYS.
7. MAINTAIN 3" MINIMUM REBAR COVER IN ALL DIRECTIONS.
8. PIER FOUNDATION DEPTH TO BE A MINIMUM OF 48"; DEPTH TO EXCEED LOCAL FROST DEPTH.

A **MULTI-METER UTILITY RACK**

SCALE: 11" x 17" - 1/2" = 1'-0"
22" x 34" - 1" = 1'-0"

CONSULTANT:
Edge
Consulting Engineers, Inc.
624 WATER STREET
PRAIRIE DU SAC, WI 53578
608.644.1449 VOICE
608.644.1549 FAX
www.edgeconsult.com
LICENSE NO.: C-4515

CLIENT:
U.S. Cellular
U.S. CELLULAR - OMAHA
10343 MILITARY AVENUE
OMAHA, NE 68134
PHONE: 402.515.4698

NORTH CAROLINA PROFESSIONAL SEAL 046428 ENGINEER ARLEN J. OSTRENG
12/3/2018

UTILITY RACK DETAILS
WARDS CORNER (556591)
BURGAW, NORTH CAROLINA

SHEET TITLE:

SUBMITTAL:

INT.	DATE:	DESCRIPTION:
TJT	10/17/2018	LEASE EXHIBIT
TJT	10/24/2018	PRELIM CDS
TJT	12/03/2018	FINAL CDS

CHECKED BY	AB
PLOT DATE	12/3/2018
PROJECT NUMBER	18686
SET TYPE	FINAL CDs
SHEET NUMBER	E-504

k:\18600\18686\CAD\Construction_Drawings\Plot\E-504.dgn

© EDGE CONSULTING ENGINEERS, INC