Pender County
Planning and Community Development

Planning Division
805 S. Walker Street
PO Box 1519
Burgaw, NC 28425

Phone: 910-259-1202
Fax: 910-259-1295
www.pendercountync.gov

Oak Grove @ Blake Farm

Case Number: SDP 2021-230

Application Type: Major Site Development

Applicant: Trask Land Company

Owners: Dry Pond Partners, LLC

Location: Blake Farm Boulevard, Wilmington, NC

Property ID #(s): 3271-21-6967-0000

Description: Senior Living Facility consisting of 183 units.

Current Zoning: PD, Planned Development

Technical Review Committee Meeting
Thursday, December 2, 2021

Board of County Commissioners/Planning Board Meeting
N/A

Application Materials
Application Package
Proposed Site Plan

APPLICATION PACKAGE

Pender County
Planning and Community Development

Planning Division
805 S. Walker Street
PO Box 1519
Burgaw, NC 28425

Phone: 910-259-1202
Fax: 910-259-1295
www.pendercountync.gov

MAJOR AND MINOR SITE DEVELOPMENT APPLICATION

THIS SECTION FOR OFFICE USE			
Date:	**Permit Number:**	**Permit Fee:**	**Invoice Number:**
*Zoning Approval ONLY: YES / NO		**Final Zoning Compliance Approved: YES / NO / N/A**	
Type of Site Development Plan:	☐ Major	☐ Minor	

SECTION 1: GENERAL INFORMATION			
Applicant's Name:	Trask Land Company, Inc.	**Property Owner's Name:**	Dry Pond Partners, LLC
Applicant's Address:	1051 Military Cutoff Road Suite 210	**Property Owner's Address:**	PO Box 3649
City, State, & Zip	Wilmington, NC 28405	**City, State, & Zip**	Wilmington, NC 28406
Phone Number:	910-799-8755	**Phone Number:**	910-762-2676
Email Address:	madison@trasklandco.com	**Email Address:**	bcameroniv@cameronco.com
Legal relationship of applicant to land owner:	Applicant to purchase property from owner		

SECTION 2: PROJECT INFORMATION			
PIN (Property Id #):	3271-21-6967-0000	**Total property acreage:**	21.37
Zoning :	PD	**Acreage to be disturbed:**	10.25 ac
Directions to Site:	Site is off of Blake Farm Boulevard on the left side of the road		
Lot Size: +/- 9.4 ac	**Sq Ft of Building:** 255,838 sf	**Building Height:** 33 ft	
Setbacks	**Front:** 25 ft	**Side:** 10 ft	**Rear:** 15 ft
NAICS Code/Use:	236116		
Business Name:	Trask Land Company, Inc.		
Describe activities to be undertaken on project site:	Project will be for an active adult living apartment complex		

Ownership:	Number of Employees:		Number of Members:		Seating Capacity:	
☒ Private ☐ Public						

If the applicant is not the owner of the property, a notarized letter from the property owner may be required

**Zoning approval is for the use being proposed ONLY, other department approvals may be required i.e. Fire Marshal, Environmental Health, Permitting, etc...*

SECTION 4: ADDITIONAL COMMENTS			
SECTION 5: SIGNATURES			
Applicant:		Date:	11/3/21
Owner:		Date:	11/3/21
Planning Staff:		Date:	

Site Development For

OAK GROVE @ BLAKE FARM

Approved by Pender County Unified Development Administrator
Approval Valid for 2 years from this date: 11/4/2022

MAY, 2022

PENDER COUNTY, NORTH CAROLINA

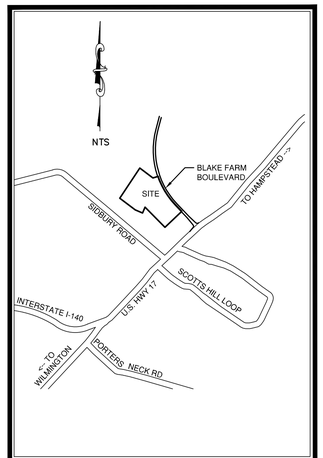

VICINITY MAP

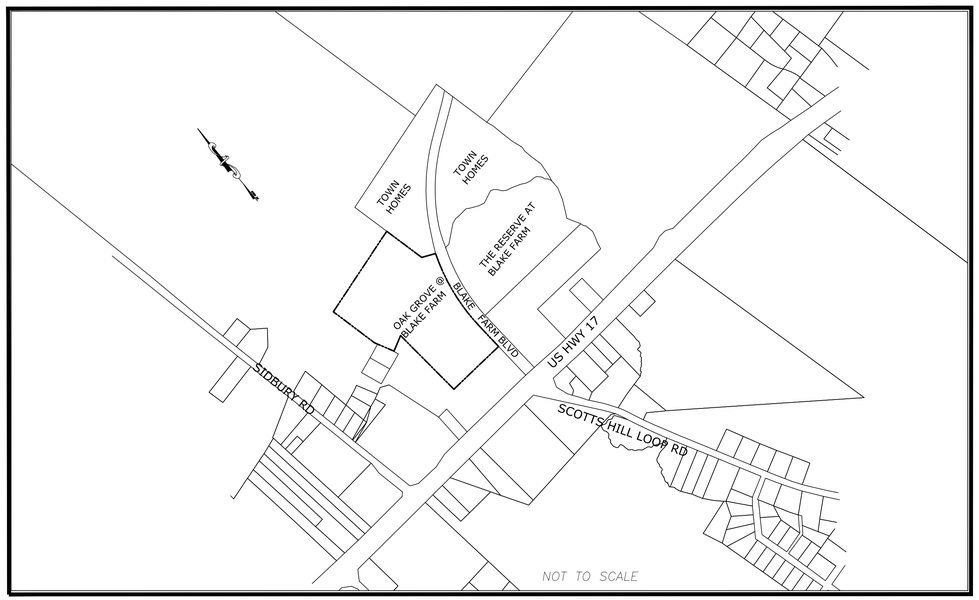

INDEX OF SHEETS

SHT C–0	COVER SHEET
SHT C–1	GENERAL NOTES
SHT C–2	EXISTING CONDITIONS
SHT C–2.1	TREE REMOVAL PLAN
SHT C–3	SITE PLAN
SHT C–4	GRADING & DRAINAGE PLAN
SHT C–4.1	DRAINAGE AREA PLAN
SHT C–5	EROSION CONTROL PLAN
SHT C–5.1	DIVERSION BERM DRAINAGE AREAS
SHT C–6.1	ROAD PLAN/PROFILE
SHT C–7.0	OVERALL UTILITY PLAN
SHT C–7.1	SEWER PLAN/PROFILE
SHT C–8.0	POND DETAIL
SHT C–8.1–4	MISCELLANEOUS DETAILS
SHT C–9.0–2	SEWER DETAILS
SHT C–10.0–1	WATER DETAILS
SHT L–1 & 2	LANDSCAPE PLAN

LEGEND

DESCRIPTION	EXISTING	PROPOSED
PROPERTY BOUNDARY		
EASEMENT		
STREAM		
STRUCTURE		
MINOR CONTOURS	8	8
MAJOR CONTOURS	10	10
GAS LINE	G	G
OVERHEAD POWER	OHP	
WATER LINE	W	W
SANITARY SEWER LINE	SS	SS
SANITARY SEWER MANHOLE	S	S
STORM DRAINAGE PIPE		
STORM DRAINAGE STRUCTURE		
TREE	11" OAK	
CONCRETE		
SILT FENCE		SF
TREE PROTECTION FENCE		TP
FIRE HYDRANT ASSEMBLY		
DISTURBED LIMITS LINE		DL
PERVIOUS PAVEMENT		

OWNER

TRASK LAND COMPANY, INC.
1022 ASHES DRIVE, SUITE 201
WILMINGTON, NC 28405
TEL: 910-799-8755
raiford@trasklandco.com

PORT CITY CONSULTING ENGINEERS, PLLC
6216 STONEBRIDGE ROAD
WILMINGTON, NC 28409
910-599-1744 LICENSE No. P-1032
mark@portcityeng.com

NORTH CAROLINA PROFESSIONAL SEAL 019742 ENGINEER MARK N. HARGROVE
5/18/2022

SITE DATA TABLE

GENERAL NOTES:

1. PENDER COUNTY PARCEL NO.: PIN# 3271–21–6967–0000
2. TOTAL AREA: 21.37 AC.±
3. EXISTING ZONING: PD
4. PROPERTY OWNERS:

EDISTO SENIOR REAL ESTATE, LLC
1022 ASHES DRIVE, SUITE 201
WILMINGTON, NC 28405 (910–799–8755)

DEVELOPMENT DATA:

Total Tract Area = 21.37 ac +/–

Totals Disturbed Area = 11.0 ac

Number of Residential Units: 183

Parking at 1.25/unit: 229 spaces

Spaces Provided: 245 provided

Pervious Parking Spaces: 22 spaces

Handicap Spaces Provided: 10 spaces – 7 required

Main Apartment Building Height – 59'–9 1/2"

Total Floor Area – 247,594 sf

Car Garage Height – 23' – 1"

Total Floor Area – 968 sf

Maintenance Building Height – 23' – 1"

Total Floor Area – 400 sf

Gazebo Height – 18' – 11"

Total Floor Area – 389 sf

Amenity Building Height – 41' – 9"

Total Floor Area – 4,329 sf

ITE Trip Generation:

ITE Code 252 – Senior Adult Housing

24 Hour Volume – 637
AM Peak Hour – Exit – 5
Enter – 9
PM Peak Hour – Exit – 12
Enter – 18

Setbacks:
Front Yard – 25 ft
Side Yard – 10 ft
Rear Yard – 15 ft

BuildingType: Main Building – VA
Garages – VB

POWER: DUKE ENERGY – JON MARSTON (910) 602–4346
AT&T (BELLSOUTH): JAMES BATSON 910–452–5300
SPECTRUM: ROBERT JOHN 910–216–4494
PENDER COUNTY PUBLIC UTILITIES: KENNY KEEL (910) 259–0212
PLURIS: RANDY HOFFER (910) 852–0630

NOTE:
ALL DESIGN AND CONSTRUCTION SHALL BE IN CONFORMANCE WITH PENDER COUNTY, PLURIS & THE STATE OF NORTH CAROLINA

COORDINATION NOTES

1. THE CONTRACTOR IS REQUIRED TO OBTAIN ANY/ALL PERMITS REQUIRED FOR CONSTRUCTION OF THESE PLANS.
2. ALL WORK IS TO BE IN ACCORDANCE WITH PENDER COUNTY AND THE STATE OF NORTH CAROLINA.
3. THE CONTRACTOR IS TO ESTABLISH AND CHECK ALL HORIZONTAL AND VERTICAL CONTROLS TO BE USED WITH THE PROJECT. IN ADDITION, THE CONTRACTOR IS TO COMPUTE THE LAYOUT OF THE ENTIRE SITE PLAN IN ADVANCE OF BEGINNING ANY WORK ASSOCIATED WITH THE SUBJECT PLANS. CONTRACTOR SHALL EMPLOY A PROFESSIONAL SURVEYOR TO PERFORM SITE IMPROVEMENT STAKEOUT(S).
4. ANYTIME WORK IS PERFORMED OFF-SITE OR WITHIN AN EXISTING EASEMENT, THE CONTRACTOR IS TO NOTIFY THE HOLDER OF SAID EASEMENT AS TO THE NATURE OF PROPOSED WORK, AND TO FOLLOW ANY GUIDELINES OR STANDARDS WHICH ARE ASSOCIATED WITH OR REFERENCED IN THE RECORDED EASEMENT.

GENERAL NOTES:

1. EXISTING TOPOGRAPHY, BOUNDARY AND UTILITIES, HAVE BEEN PREPARED BY FIELD SURVEY BY MICHAEL UNDERWOOD AND ASSOCIATES, PA.
2. REASONABLE CARE HAS BEEN EXERCISED IN SHOWING THE LOCATION OF EXISTING UTILITIES ON THE PLANS. THE EXACT LOCATION OF ALL EXISTING UTILITIES IS NOT KNOWN IN ALL CASES. THE CONTRACTOR SHALL EXPLORE THE AREA AHEAD OF DITCHING OPERATIONS BY OBSERVATIONS, ELECTRONIC DEVICES, HAND DIGGING AND BY PERSONAL CONTACT WITH THE UTILITY COMPANIES. IN ORDER TO LOCATE EXISTING UTILITIES IN ADVANCE OF TRENCHING OPERATIONS SO AS TO ELIMINATE OR MINIMIZE DAMAGE TO EXISTING UTILITIES. THE CONTRACTOR SHALL BE RESPONSIBLE FOR ALL COSTS RESULTING FROM ANY DAMAGE TO THE EXISTING UTILITY LINES INCLUDING LOSS OF UTILITY REVENUES. CONTRACTOR SHALL ARRANGE FOR TEMPORARY SUPPORT OF EXISTING UTILITIES, SUCH AS POLES, CONDUITS, FIBER OPTIC CABLES, TELEPHONE CABLES, WATER LINES, ETC...
3. CONTRACTOR SHALL COMPLY WITH THE LATEST REVISIONS AND INTERPRETATIONS OF THE DEPARTMENT OF LABOR SAFETY AND HEALTH REGULATIONS FOR CONSTRUCTION PROMULGATED UNDER THE OCCUPATIONAL SAFETY AND HEALTH ACT.
4. CONTRACTOR SHALL PLAN AND CONSTRUCT WORK SO AS TO CAUSE MINIMUM INCONVENIENCE TO THE OWNER AND THE PUBLIC. THE CONTRACTOR SHALL PROVIDE, ERECT AND MAINTAIN AT ALL TIMES DURING THE PROGRESS OR TEMPORARY SUSPENSION OF WORK, SUITABLE BARRIERS, FENCES, SIGNS OR OTHER ADEQUATE PROTECTION, INCLUDING FLAGMEN AND WATCHMEN AS NECESSARY TO INSURE THE SAFETY OF THE PUBLIC AS WELL AS THOSE ENGAGED IN THE CONSTRUCTION WORK. CONSTRUCTION SIGNING SHALL BE IN ACCORDANCE WITH THE LATEST EDITION OF "CONSTRUCTION AND MAINTENANCE OPERATIONS SUPPLEMENT TO THE MANUAL ON UNIFORM TRAFFIC CONTROL DEVICES" BY THE DOT.
5. ALL MATERIAL CLEARED OR DEMOLISHED BY THE CONTRACTOR IN ORDER TO CONSTRUCT THE WORK SHALL BECOME THE PROPERTY OF THE CONTRACTOR AND SHALL BE PROPERLY DISPOSED OF OFF-SITE.
6. ALL WORK BY THE CONTRACTOR SHALL BE WARRANTED BY THE CONTRACTOR FOR A PERIOD OF ONE YEAR AFTER THE OWNER ACCEPTS THE WORK.
7. CONTRACTOR SHALL CALL THE NORTH CAROLINA ONE-CALL CENTER AT 1 (800) 632-4949 AND ALLOW THE CENTER TO LOCATE EXISTING UTILITIES BEFORE DIGGING.
8. CONTRACTOR SHALL REMOVE ASPHALT, AGGREGATE BASE COURSE, AND CONCRETE CURB & GUTTER WITHIN LIMITS OF DEMOLITION AS SHOWN ON PLAN.

DEMOLITION NOTES

1. CONTRACTOR TO COORDINATE WITH THE OWNER TO PROPERLY MAINTAIN OR RELOCATE EXISTING SERVICE CONNECTIONS WHEN NECESSARY
2. CONTRACTOR IS TO WALK THE SITE AND BECOME FAMILIAR WITH THE SCOPE OF DEMOLITION REQUIRED. ALL DEMOLITION WORK REQUIRED TO CONSTRUCT NEW SITE IMPROVEMENTS WILL BE PERFORMED BY THE CONTRACTOR AND WILL BE UNCLASSIFIED EXCAVATION.
3. DEMOLITION SHALL INCLUDE BUT IS NOT LIMITED TO THE EXCAVATION, HAULING AND OFFSITE DISPOSAL OF CONCRETE PADS, CONCRETE DITCHES, FOUNDATIONS, SLABS, STEPS, AND STRUCTURES; ABANDONED UTILITIES, BUILDINGS, PAVEMENTS AND ALL MATERIALS CLEARED AND STRIPPED TO THE EXTENT NECESSARY AS DIRECTED BY THE SOILS ENGINEER FOR THE INSTALLATION OF THE NEW IMPROVEMENTS AND WITHIN THE LIMITS OF CLEARING AND GRADING AND AS SHOWN ON THESE PLANS.
4. THE CONTRACTOR SHALL PROTECT ALL ADJACENT PROPERTY, STRUCTURES AND UTILITIES ON THE PROPERTY NOT TO BE DEMOLISHED. DAMAGE TO PROPERTIES OF OTHERS DUE TO THE CONTRACTOR'S ACTIVITIES SHALL BE REPLACED IN KIND BY THE CONTRACTOR AT NO COST TO OWNER.
5. ELECTRIC, TELEPHONE, SANITARY SEWER, WATER AND STORM SEWER UTILITIES THAT SERVICE OFF-SITE PROPERTIES SHALL BE MAINTAINED DURING THE CONSTRUCTION PROCESS BY THE CONTRACTOR.
6. EXISTING UTILITIES NOT INTENDED FOR DEMOLITION SHALL BE MAINTAINED, PROTECTED AND UNDISTURBED DURING DEMOLITION
7. ALL EXISTING IMPROVEMENTS INDICATED OR REQUIRED TO BE DEMOLISHED SHALL INCLUDE REMOVAL FROM THE PROPERTY AND PROPER DISPOSAL.
8. CONTRACTOR SHALL COORDINATE RELOCATION OF ALL EXISTING OVER HEAD AND UNDERGROUND UTILITIES INCLUDING CABLE, GAS, TELEPHONE AND ELECTRIC AND ANY OTHER UTILITIES THROUGH THE SITE WITH THE RESPECTIVE COMPANIES.
9. PROVIDE SMOOTH SAW CUT OF EXISTING PAVEMENTS, CURBS AND GUTTERS AND SIDEWALKS TO BE DEMOLISHED.
10. ALL DEMOLITION WORK SHALL BE DONE IN STRICT ACCORDANCE WITH LOCAL, STATE AND FEDERAL REGULATIONS AS WELL AS OSHA REGULATIONS.
11. INFORMATION CONCERNING UNDERGROUND UTILITIES WAS OBTAINED FROM AVAILABLE RECORDS, BUT THE THE CONTRACTOR MUST DETERMINE THE EXACT LOCATION AND ELEVATIONS OF THE MAINS BY DIGGING TEST PITS BY HAND.

EROSION AND SEDIMENT CONTROL NOTES

GENERAL NOTES:

1. CLEAR AND REMOVE FROM SITE ALL TREES, ROOTS, ROOT MAT, ETC. FROM THE AREA WITHIN DESIGNATED CLEARING LIMITS.
2. PLANT GRASS OVER ALL GRADED AREAS AS SHOWN IN THE TABLE ON THIS SHEET OF CEASE OF ANY GRADING ACTIVITY.
3. CONTRACTOR SHALL BE RESPONSIBLE FOR CLEANING AND RESTORING TO PRE-CONSTRUCTION CONDITIONS ANY AREAS OUTSIDE THE PROJECT LIMITS THAT MAY INADVERTENTLY BE DAMAGED DUE TO THE FAILURE OF THE EROSION MEASURES
4. DURING GRADING AND AFTER GRADING HAS BEEN COMPLETED, CONTRACTOR SHALL CONTINUE TO MAINTAIN PERMANENT AND TEMPORARY EROSION CONTROL MEASURES UNTIL FINAL INSPECTION AND APPROVAL BY NEW HANOVER COUNTY.
5. WATER, FERTILIZE, MOW AND MAINTAIN SPRIGGED, SODDED AND PLANTED AREAS UNTIL FINAL APPROVAL BY NEW HANOVER COUNTY.
6. ANY BORROW MATERIAL BROUGHT ONTO SITE MUST BE FROM A LEGALLY OPERATED MINE OR OTHER APPROVED SOURCE.
7. ANY EXCESS MATERIAL REMOVED FROM SITE MUST BE HAULED TO A LEGALLY OPERATED MINE OR OTHER APPROVED SOURCE.

MAINTENANCE PLAN

1. ALL EROSION AND SEDIMENT CONTROL PRACTICES WILL BE CHECKED FOR STABILITY AND OPERATION FOLLOWING EVERY RUNOFF-PRODUCING RAINFALL BUT IN NO CASE LESS THAN ONCE EVERY WEEK. ANY NEEDED REPAIRS WILL BE MADE IMMEDIATELY TO MAINTAIN ALL PRACTICES AS DESIGNED.
2. ALL CONSTRUCTION ENTRANCES WILL BE PERIODICALLY TOP DRESSED WITH AN ADDITIONAL 2 INCHES OF #4 STONE TO MAINTAIN PROPER DEPTH. ANY SEDIMENT THAT IS TRACKED INTO THE STREET WILL BE IMMEDIATELY REMOVED.
3. SEDIMENT WILL BE REMOVED BEHIND THE SEDIMENT FENCE WHEN IT BECOMES 0.5 FEET DEEP AT THE FENCE. THE SEDIMENT FENCE WILL BE REPAIRED AS NECESSARY TO MAINTAIN A BARRIER. SILT FENCE STAKES WILL BE SPACED 6 FEET APART UNLESS A WIRE BACKING IS USED WITH 8 FOOT STAKE SPACING.
4. INSPECT TEMPORARY DIVERSIONS ONCE A WEEK AND AFTER EVERY RAINFALL. IMMEDIATELY REMOVE SEDIMENT FROM THE FLOW AREA AND REPAIR THE DIVERSION RIDGE. CAREFULLY CHECK OUTLETS AND MAKE TIMELY REPAIRS AS NEEDED. WHEN THE AREA PROTECTED IS PERMANENTLY STABILIZED, REMOVE THE RIDGE AND THE CHANNEL TO BLEND WITH THE NATURAL GROUND LEVEL AND APPROPRIATELY STABILIZE IT.
5. INSPECT INLET PROTECTION AT LEAST WEEKLY AND AFTER EACH SIGNIFICANT (1/2 INCH OR GREATER) RAINFALL EVENT. CLEAR THE MESH WIRE OF ANY DEBRIS OR OTHER OBJECTS TO PROVIDE ADEQUATE FLOW FOR SUBSEQUENT RAINS. TAKE CARE NOT TO DAMAGE OR UNDERCUT THE WIRE MESH DURING SEDIMENT REMOVAL. REPLACE STONE AS NEEDED.

   INSPECT SILT SACKS AT LEAST WEEKLY AND AFTER EACH SIGNIFICANT (1/2 INCH OR GREATER) RAINFALL EVENT. CLEAR THE SILT SACK OF ANY DEBRIS OR OTHER OBJECTS TO PROVIDE ADEQUATE FLOW FOR SUBSEQUENT RAINS. TAKE CARE NOT TO DAMAGE THE SILT SACK DURING SEDIMENT REMOVAL. REPLACE AS NEEDED.
6. INSPECT SKIMMER SEDIMENT BASINS AS LEAST WEEKLY AND AFTER EACH SIGNIFICANT (ONE-HALF INCH OR GREATER) RAINFALL EVENT AND REPAIR IMMEDIATELY. REMOVE SEDIMENT AND RESTORE THE BASIN TO ITS ORIGINAL DIMENSIONS WHEN SEDIMENT ACCUMULATES TO ONE-HALF THE HEIGHT OF THE FIRST BAFFLE. PULL THE SKIMMER TO ONE SIDE SO THAT THE SEDIMENT UNDERNEATH IT CAN BE EXCAVATED. EXCAVATE THE SEDIMENT FROM THE ENTIRE BASIN, NOT JUST AROUND THE SKIMMER OR THE FIRST CELL. MAKE SURE VEGETATION GROWING IN THE BOTTOM OF THE BASIN DOES NOT HOLD DOWN THE SKIMMER. REPAIR THE BAFFLES IF THEY ARE DAMAGED. RE-ANCHOR THE BAFFLES IF WATER IS FLOWING UNDERNEATH OR AROUND THEM.

   IF THE SKIMMER IS CLOGGED WITH TRASH AND THERE IS WATER IN THE BASIN, USUALLY JERKING ON THE ROPE WILL MAKE THE SKIMMER BOB UP AND DOWN AND DISLODGE THE DEBRIS AND RESTORE FLOW. IF THIS DOES NOT WORK, PULL THE SKIMMER OVER TO THE SIDE OF THE BASIN AND REMOVE THE DEBRIS. ALSO CHECK THE ORIFICE INSIDE THE SKIMMER TO SEE IF IT IS CLOGGED; IF SO REMOVE THE DEBRIS.

   IF THE SKIMMER ARM OR BARREL PIPE IS CLOGGED, THE ORIFICE CAN BE REMOVED AND THE OBSTRUCTION CLEARED WITH A PLUMBER'S SNAKE OR BY FLUSHING WITH WATER. BE SURE AND REPLACE THE ORIFICE BEFORE REPOSITIONING THE SKIMMER. CHECK FABRIC LINED SPILLWAY FOR DAMAGE AND MAKE ANY REPAIRS WITH FABRIC THAT SPANS THE FULL WIDTH OF THE SPILLWAY. CHECK THE EMBANKMENT, SPILLWAYS AND OUTLET FOR EROSION DAMAGE, AND INSPECT THE EMBANKMENT FOR PIPING AND SETTLEMENT. MAKE ALL NECESSARY REPAIRS IMMEDIATELY. REMOVE ALL TRASH AND THERE DEBRIS FROM THE SKIMMER AND POOL AREAS. FREEZING WEATHER CAN RESULT IN ICE FORMING IN THE BASIN. SOME SPECIAL PRECAUTIONS SHOULD BE TAKEN IN THE WINTER TO PREVENT THE SKIMMER FROM PLUGGING WITH ICE..
7. ALL SEEDED AREAS WILL BE FERTILIZED, RESEEDED AS NECESSARY, AND MULCHED ACCORDING TO SPECIFICATIONS IN THE VEGETATIVE PLAN TO MAINTAIN A VIGOROUS, DENSE VEGETATIVE COVER. ALL SLOPES WILL BE STABILIZED WITHIN 21 CALENDAR DAYS. ALL OTHER AREAS WILL BE STABLIZED WITHIN 15 WORKING DAYS.

PERMANENT SEEDING SCHEDULE

Seeding Mixture

SPECIES	RATE (LB/ACRE)
CAROLINA COASTAL SEED MIX (BLEND)	200
20.35% GULF ANNUAL RYEGRASS	
30.30% BROWNTOP MILLET	
29.75% FAWN TALL FESCUE	
9.65% CREEPING RED FESCUE	
7.4% UNHULLED BERMUDAGRASS	
0.55% CENTIPEDEGRASS	

Seeding Dates

MARCH – JUNE

Soil Amendments

APPLY LIME AND FERTILIZER ACCORDING TO SOIL TESTS, OR APPLY 300 LB/ACRE 10-10-10 FERTILIZER.

CHECK WITH OWNER PRIOR TO APPLYING. ALL CHEMICALS MUST BE PREAPPROVED BY GE.

Mulch

DO NOT MULCH.

Maintenance By Owner

FERTILIZE VERY SPARINGLY LB/ACRE NITROGEN IN SPRING WITH NO PHOSPHORUS. CENTIPEDE GRASS CANNOT TOLERATE HIGH PH OR EXCESS FERTILIZER.

TEMPORARY SEEDING-LATE WINTER/EARLY SPRING

Seeding Mixture

WINTER AND EARLY SPRING

SPECIES
Rye (GRAIN)
ANNUAL LESPEDEZA (KOBE IN PIEDMONT AND COASTAL PLAIN, KOREAN IN MOUNTAINS)

OMIT ANNUAL LESPEDEZA WHEN DURATION OF TEMPORARY COVER IS NOT TO EXTEND BEYOND JUNE.

SUMMER

SPECIES	RATE (LB/ACRE)
GERMAN MILLET	120
	50

FALL

SPECIES	RATE (LB/ACRE)
RYE (GRAIN)	40

Seeding dates

COASTAL PLAIN – DEC.1-APR. 15 – LATE WINTER AND EARLY SPRING
APRIL 15 – AUG. 15 – SUMMER
AUG. 15 – DEC. 30 – FALL

Soil amendments

FOLLOW RECOMMENDATIONS OF SOIL TESTS OR APPLY 2,000 LB/ACRE GROUND AGRICULTURAL LIMESTONE AND 750 LB/ACRE 10-10-10 FERTILIZER.

Mulch

APPLY 4,000 LB/ACRE STRAW. ANCHOR STRAW BY TACKING WITH ASPHALT, NETTING OR A MULCH ANCHORING TOOL. A DISK WITH BLADES SET NEARLY STRAIGHT CAN BE USED AS A MULCH ANCHORING TOOL.

Maintenance

REFERTILIZE IF GROWTH IS NOT FULLY ADEQUATE. RESEED, REFERTILIZE AND MULCH IMMEDIATELY FOLLOWING EROSION OR OTHER DAMAGE.

GENERAL GRADING NOTES

1. REASONABLE CARE HAS BEEN EXERCISED IN SHOWING THE LOCATION OF EXISTING UTILITIES ON THE PLANS. THE EXACT LOCATION OF SUCH UTILITIES IS NOT KNOWN IN ALL CASES. THE CONTRACTOR SHALL EXPLORE THE AREA AHEAD OF THE DITCHING OPERATION BY OBSERVATIONS, ELECTRONIC DEVICES, HAND DIGGING AND BY PERSONAL CONTACT WITH THE UTILITY COMPANIES IN ORDER TO LOCATE EXISTING UTILITIES IN ADVANCE OF THE TRENCHING OPERATIONS SO AS TO AVOID AND PREVENT DAMAGE TO THE EXISTING UTILITIES. CONTRACTOR SHALL BE RESPONSIBLE FOR ALL COST RESULTING FROM ANY DAMAGE TO THE EXISTING UTILITY LINES INCLUDING BUT NOT LIMITED TO REPAIRS AND LOSS SERVICE REVENUE. CONTRACTOR SHALL ARRANGE FOR TEMPORARY SUPPORT OF EXISTING UTILITIES, SUCH AS POLES, CONDUITS, FIBER OPTIC CABLES, TELEPHONE CABLES, WATER LINES, ETC...
2. CONTRACTOR SHALL COMPLY WITH THE LATEST REVISIONS AND INTERPRETATIONS OF THE DEPARTMENT OF LABOR SAFETY AND HEALTH REGULATIONS FOR CONSTRUCTION PROMULGATED UNDER THE OCCUPATIONAL SAFETY AND HEALTH ACT.
3. CONTRACTOR SHALL PLAN AND CONSTRUCT WORK SO AS TO CAUSE MINIMUM INCONVENIENCE TO THE OWNER AND THE PUBLIC. THE CONTRACTOR SHALL PROVIDE, ERECT AND MAINTAIN AT ALL TIMES DURING THE PROGRESS OR TEMPORARY SUSPENSION OF WORK, SUITABLE BARRIERS, FENCES, SIGNS OR OTHER ADEQUATE PROTECTION, INCLUDING FLAG MEN AND WATCHMEN AS NECESSARY TO INSURE THE SAFETY OF THE PUBLIC AS WELL AS THOSE ENGAGED IN THE CONSTRUCTION WORK. CONSTRUCTION SIGNING SHALL BE IN ACCORDANCE WITH THE LATEST EDITION OF "CONSTRUCTION AND MAINTENANCE OPERATIONS SUPPLEMENT TO THE MANUAL ON UNIFORM TRAFFIC CONTROL DEVICES" BY THE NCDOT.
4. ALL MATERIAL CLEARED AND GRUBBED BY THE CONTRACTOR IN ORDER TO CONSTRUCT THE WORK, SUCH AS TREES, VEGETATION, FENCING, ETC... SHALL BECOME THE PROPERTY OF THE CONTRACTOR AND SHALL BE PROPERLY DISPOSED OF OFF-SITE OR BURNED IF PROPER PERMITS ARE RECEIVED.

SITE NOTES

1. ANY DISCREPANCY IN THIS PLAN AND ACTUAL FIELD CONDITIONS SHALL BE REPORTED TO THE OWNER PRIOR TO START OF CONSTRUCTION. GENERAL CONTRACTOR SHALL BE RESPONSIBLE FOR VERIFICATION OF ALL SETBACKS, EASEMENTS AND DIMENSIONS SHOWN HEREON BEFORE BEGINNING CONSTRUCTION.
2. THE GENERAL CONTRACTOR SHALL CONTACT ALL OWNERS OF EASEMENTS, UTILITIES AND R.O.W.'S PUBLIC OR PRIVATE, PRIOR TO WORKING IN THESE AREAS.
3. CONTRACTOR SHALL MAINTAIN THE SITE IN A MANNER SO THAT WORKMEN AND PUBLIC SHALL BE PROTECTED FROM INJURY, AND ADJOINING PROPERTY PROTECTED FROM DAMAGE.
4. ACCESS TO UTILITIES, FIRE HYDRANTS, STREET LIGHTING, ETC., SHALL REMAIN UNDISTURBED, UNLESS COORDINATED WITH THE RESPECTIVE UTILITY.
5. DO NOT SCALE THIS DRAWING AS IT IS A REPRODUCTION AND SUBJECT TO DISTORTION.
6. THE GENERAL CONTRACTOR SHALL REMOVE ALL DEBRIS FROM THE SITE UPON COMPLETION OF THE PROJECT AND AT LEAST ONCE A WEEK DURING CONSTRUCTION.
7. THE GENERAL CONTRACTOR SHALL KEEP THE AREA OUTSIDE THE "CONSTRUCTION LIMITS" BROOM CLEAN AT ALL TIMES.
8. CONTRACTOR SHALL MAINTAIN AN "AS-BUILT" SET OF DRAWINGS TO RECORD THE EXACT LOCATION OF ALL PIPING PRIOR TO CONCEALMENT. DRAWINGS SHALL BE GIVEN TO THE OWNER UPON COMPLETION OF THE PROJECT WITH A COPY OF THE TRANSMITTAL LETTER TO THE ENGINEER.
9. IF DEPARTURES FROM THE SPECIFICATIONS OR DRAWINGS ARE DEEMED NECESSARY BY THE CONTRACTOR, DETAILS OF SUCH DEPARTURES AND REASONS THEREOF SHALL BE GIVEN TO THE OWNER FOR REVIEW, NO DEPARTURES FROM THE CONTRACT DOCUMENT SHALL BE MADE WITHOUT THE PERMISSION OF THE OWNER.
10. CONTRACTOR SHALL VERIFY LOCATION AND ELEVATION OF ALL UNDERGROUND UTILITIES. THE LOCATION OF ALL EXISTING UTILITIES ARE NOT NECESSARILY SHOWN ON PLANS AND WHERE SHOWN ARE ONLY APPROXIMATE. THE CONTRACTOR SHALL ON HIS INITIATIVE AND AT NO EXTRA COST HAVE LOCATED ALL UNDERGROUND LINES AND STRUCTURES AS NECESSARY. NO CLAIMS FOR DAMAGES OR EXTRA COMPENSATION SHALL ACCRUE TO THE CONTRACTOR FROM THE PRESENCE OF SUCH PIPE OTHER OBSTRUCTIONS OR FROM DELAY DUE TO REMOVAL OR REARRANGEMENT OF THE SAME. THE CONTRACTOR SHALL BE RESPONSIBLE FOR ANY DAMAGE TO UNDERGROUND STRUCTURES. CONTACT NORTH CAROLINA ONE CALL" TOLL FREE 1-800-632-4949 AT LEAST 48 HOURS PRIOR TO CONSTRUCTION. THE CONTRACTOR IS RESPONSIBLE FOR CONTACTING ALL NONSUBSCRIBING UTILITIES.
11. ALL PERMITS RELATIVE TO PROJECT MUST BE OBTAINED, PRIOR TO CONSTRUCTION
12. ALL CONSTRUCTION TO BE IN ACCORDANCE WITH PERMITS ISSUED AND APPLICABLE STATE, COUNTY, AND LOCAL CODES.
13. FOR BUILDING DIMENSIONS, SEE ARCHITECTURAL DRAWINGS.
14. ALL DIMENSIONS AND RADII ARE TO OUTSIDE FACE OF BUILDING OR TO FACE OF CURB UNLESS OTHERWISE NOTED.
15. THE CONTRACTOR SHALL OBTAIN AND PAY FOR ALL INSPECTIONS, CERTIFICATIONS, EQUIPMENT, ETC., THAT MAY BE REQUIRED.
16. THE ENGINEER AND/OR OWNER DISCLAIM ANY ROLE IN THE CONSTRUCTION MEANS AND METHODS ASSOCIATED WITH THE PROJECT AS SET FORTH IN THESE PLANS.

GENERAL STORM SEWER NOTES

1. ALL STORM SEWERS SHALL BE CONSTRUCTED IN ACCORDANCE WITH PENDER COUNTY AND THE STATE OF NORTH CAROLINA REQUIREMENTS AS SPECIFIED ON THE DRAWINGS AND IN THE PROJECT SPECIFICATIONS.
2. BEDDING FOR ALL STORM SEWER PIPE SHALL BE AS SPECIFIED ON THE DRAWINGS, PROJECT SPECIFICATIONS, AND MANUFACTURER SPECIFICATIONS.
3. ALL STORM SEWER PIPES TO BE HDPE ADS N-12 OR EQUIVALENT, UNLESS OTHERWISE SPECIFIED.
4. ALL STORM SEWER PIPES SHOWN AS RCP ON THE PLANS SHALL BE REINFORCED CONCRETE PIPE CONFORMING TO ASTM C-76, UNLESS INDICATED OTHERWISE ON PLANS.

GENERAL FIRE MARSHALL NOTES:

1. BUILDING WILL REQUIRE SPRINKLER AND FIRE ALARM PURSUANT TO NCSFC, NFPA 13 & 72.
2. FIRE EXTINGUISHERS IN COMMON AREAS PURSANT TO NCSFC CHAP. 9.
3. PURSUANT TO 905.3.1, THE BUILDING IS ABOVE 30 FT AND WILL REQUIRE A STANDPIPE SYSTEM. POOL/CLUBHOUSE WILL BE REQUIRED TO HAVE SPRINKLER, ALARM AND EMERGENCY CALL BOX
4. BUILDING WILL REQUIRE A BDA DUE TO SIZE, CONSTRUCTION MATERIALS AND MULTIPLE FLOOR LEVELS PURSUANT TO NCSFC SECTION 510.
5. A HYDRANT WILL BE NEED TO BE WITHIN 100 FT OF THE FDC FOR THE STANDPIPE SYSTEM AND THE STANDPIPE WILL NEED TO BE ACCESSIBLE ON ALL FOUR FLOORS PLUS THE INNER COURTYARD.
6. A KNOX BOX WILL NEED TO BE PROVIDED FOR KEY ACCESS TO ALL COMMON AREAS.

EXISTING UTILITY NOTES

1. IT IS THE RESPONSIBILITY OF THE GENERAL CONTRACTOR TO VERIFY THE ACTUAL LOCATION AND AVAILABILITY OF ALL EXISTING AND PROPOSED UTILITIES IN THE FIELD PRIOR TO GROUND BREAKING.
2. EXISTING UTILITIES AND STRUCTURES SHOWN, BOTH UNDERGROUND AND ABOVE GROUND, ARE BASED ON A FIELD SURVEY AND THE BEST AVAILABLE RECORD DRAWINGS. THE CONTRACTOR SHALL FIELD VERIFY FIELD CONDITIONS PRIOR TO BEGINNING RELATED CONSTRUCTION. ANY DISCREPANCIES SHALL BE REPORTED TO THE OWNER'S REPRESENTATIVE IMMEDIATELY.

UTILITY CONTACTS:

1. CONTACT THE NORTH CAROLINA ONE CALL CENTER PRIOR TO DOING AND DIGGING. 1-800-632-4949

   DUKE ENGERY: JOHN ELLIOT – john.elliott@pgnmail.com

NOTICE REQUIRED

ALL EXISTING UNDERGROUND UTILITIES SHALL BE PHYSICALLY LOCATED BY CONTRACTOR PRIOR TO THE BEGINNING OF ANY CONSTRUCTION IN THE VICINITY OF SAID UTILITIES.

CONTRACTORS SHALL NOTIFY OPERATORS WHO MAINTAIN UNDERGROUND UTILITY LINES IN THE AREA OF PROPOSED EXCAVATION AT LEAST THREE WORKING DAYS, BUT NOT MORE THAN TWELVE WORKING DAYS PRIOR TO ANY EXCAVATION OR DEMOLITION.

CONTACT "CAROLINA ONE CALL" AT
1-800-632-4949 or 811

EMERGENCY DIAL 911 POLICE - FIRE - RESCUE

NORTH CAROLINA PROFESSIONAL SEAL 019742 ENGINEER MARK N. HARGROVE
5/16/2022

No.	Revision	Date	By
1	REVISED PER NC LAND QUALITY COMMENTS	5/16/22	MNH

Designer MNH	Scale AS SHOWN
Drawn By MNH	Date MAY, 2022
Checked By MNH	Job No.

OAK GROVE @ BLAKE FARM

PENDER COUNTY NORTH CAROLINA

TRASK LAND COMPANY, INC.
1051 MILITARY CUTOFF ROAD, SUITE 210
WILMINGTON, NC 28405

PORT CITY CONSULTING ENGINEERS, PLLC
6216 STONEBRIDGE ROAD
WILMINGTON, NC 28409
910-599-1744 LICENSE No. P-1032

GENERAL NOTES

Sheet No. C-1

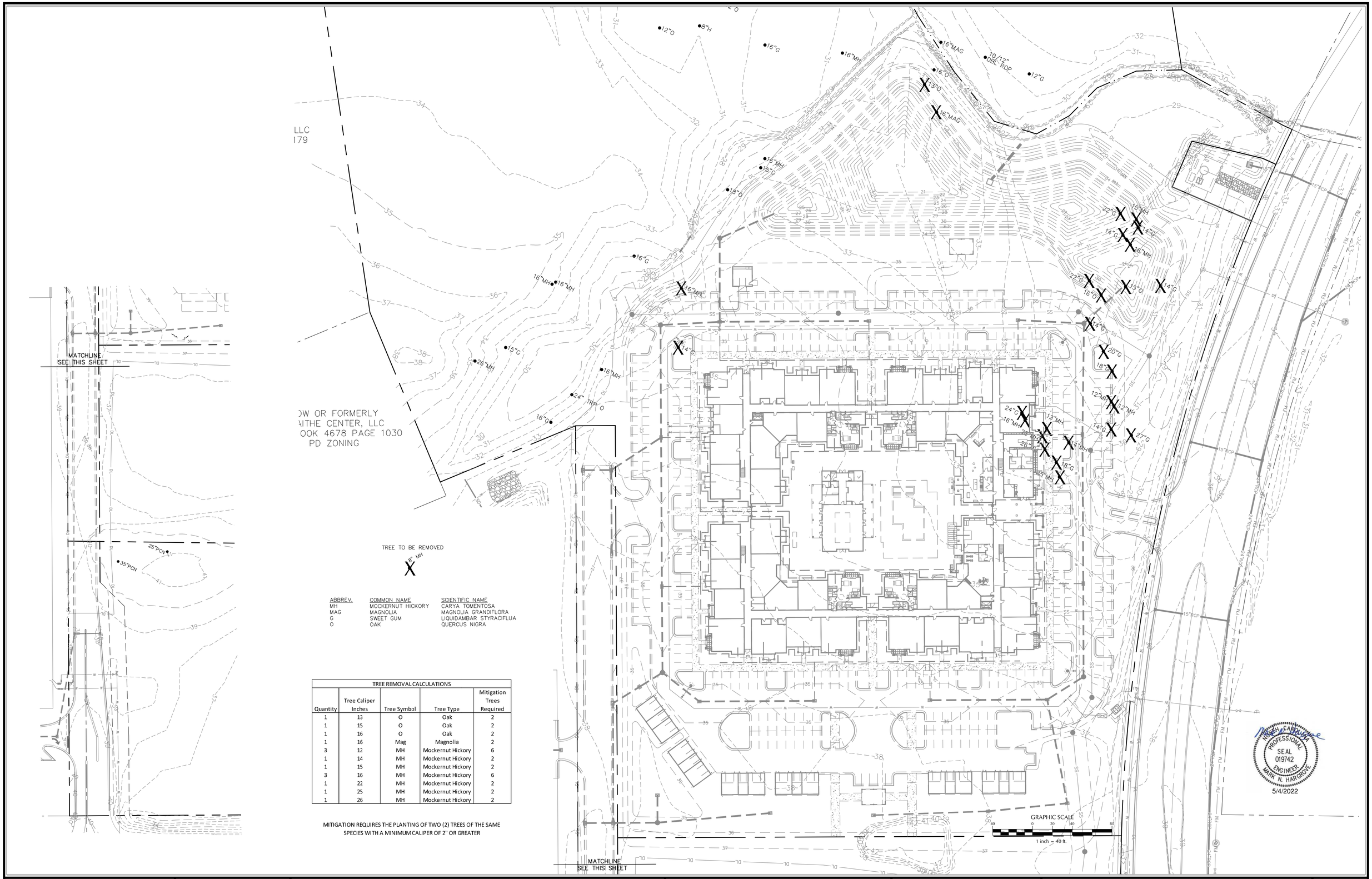

ABBREV.	COMMON NAME	SCIENTIFIC NAME
MH	MOCKERNUT HICKORY	CARYA TOMENTOSA
MAG	MAGNOLIA	MAGNOLIA GRANDIFLORA
G	SWEET GUM	LIQUIDAMBAR STYRACIFLUA
O	OAK	QUERCUS NIGRA

TREE REMOVAL CALCULATIONS

Quantity	Tree Caliper Inches	Tree Symbol	Tree Type	Mitigation Trees Required
1	13	O	Oak	2
1	15	O	Oak	2
1	16	O	Oak	2
1	16	Mag	Magnolia	2
3	12	MH	Mockernut Hickory	6
1	14	MH	Mockernut Hickory	2
1	15	MH	Mockernut Hickory	2
3	16	MH	Mockernut Hickory	6
1	22	MH	Mockernut Hickory	2
1	25	MH	Mockernut Hickory	2
1	26	MH	Mockernut Hickory	2

MITIGATION REQUIRES THE PLANTING OF TWO (2) TREES OF THE SAME SPECIES WITH A MINIMUM CALIPER OF 2" OR GREATER

No.	Revision	Date	By

Designer MNH	Scale AS SHOWN
Drawn By MNH	Date MAY, 2022
Checked By MNH	Job No.

OAK GROVE @ BLAKE FARM

PENDER COUNTY NORTH CAROLINA

TRASK LAND COMPANY, INC.
1022 ASHES DRIVE, SUITE 201
WILMINGTON, NC 28405

PORT CITY CONSULTING ENGINEERS, PLLC
6216 STONEBRIDGE ROAD
WILMINGTON, NC 28409
910-599-1744 LICENSE No. P-1032

TREE REMOVAL PLAN

Sheet No.
C-2.1

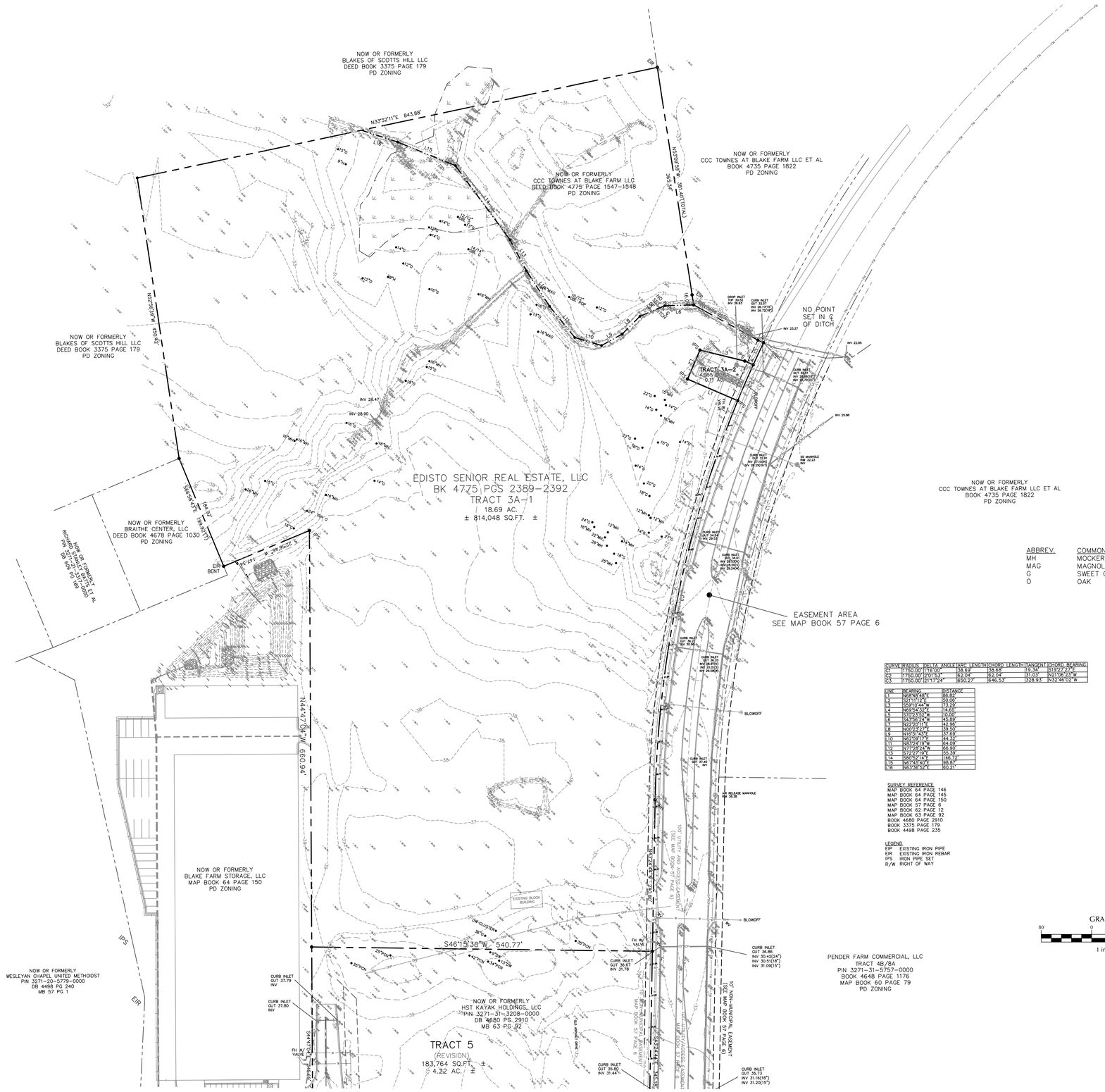

ABBREV.	COMMON NAME	SCIENTIFIC NAME
MH	MOCKERNUT HICKORY	CARYA TOMENTOSA
MAG	MAGNOLIA	MAGNOLIA GRANDIFLORA
G	SWEET GUM	LIQUIDAMBAR STYRACIFLUA
O	OAK	QUERCUS NIGRA

CURVE	RADIUS	DELTA ANGLE	ARC LENGTH	CHORD LENGTH	TANGENT	CHORD BEARING
C1	1750.00'	1°16'09"	38.69'	38.68'	19.34'	S19°27'27"E
C2	1750.00'	2°01'53"	62.04'	62.04'	31.03'	N23°08'23"W
C3	1750.00'	21°17'24"	650.27'	646.53'	328.93'	N32°48'02"W

LINE	BEARING	DISTANCE
L1	N28°13'18"E	86.59'
L2	S59°47'39"E	60.00'
L3	S59°31'44"W	73.10'
L4	S69°54'13"E	14.00'
L5	S69°53'50"W	10.00'
L6	S41°56'24"W	45.89'
L7	N22°01'11"E	42.96'
L8	N50°13'27"E	39.50'
L9	N16°51'43"E	37.69'
L10	N5°09'17"E	44.37'
L11	N83°24'19"W	64.09'
L12	N77°28'24"W	66.90'
L13	S22°47'19"E	55.39'
L14	S80°52'14"E	148.79'
L15	N67°45'45"E	98.87'
L16	N83°56'53"E	60.21'

SURVEY REFERENCE
MAP BOOK 64 PAGE 146
MAP BOOK 64 PAGE 145
MAP BOOK 64 PAGE 150
MAP BOOK 57 PAGE 6
MAP BOOK 62 PAGE 12
MAP BOOK 63 PAGE 92
BOOK 4680 PAGE 2910
BOOK 3375 PAGE 179
BOOK 4498 PAGE 235

LEGEND
EIP EXISTING IRON PIPE
EIR EXISTING IRON REBAR
IPS IRON PIPE SET
R/W RIGHT OF WAY

NICHOLAS CAROLINA PROFESSIONAL SEAL 019742 ENGINEER MARK N. HARGROVE
5/4/2022

No.	Revision	Date	By

Designer MNH	Scale AS SHOWN
Drawn By MNH	Date MAY, 2022
Checked By MNH	Job No.

OAK GROVE @ BLAKE FARM

PENDER COUNTY NORTH CAROLINA

TRASK LAND COMPANY, INC.
1022 ASHES DRIVE, SUITE 201
WILMINGTON, NC 28405

PORT CITY CONSULTING ENGINEERS, PLLC
6216 STONEBRIDGE ROAD
WILMINGTON, NC 28409
910-599-1744 LICENSE No. P-1032

EXISTING CONDITIONS

Sheet No.
C-2

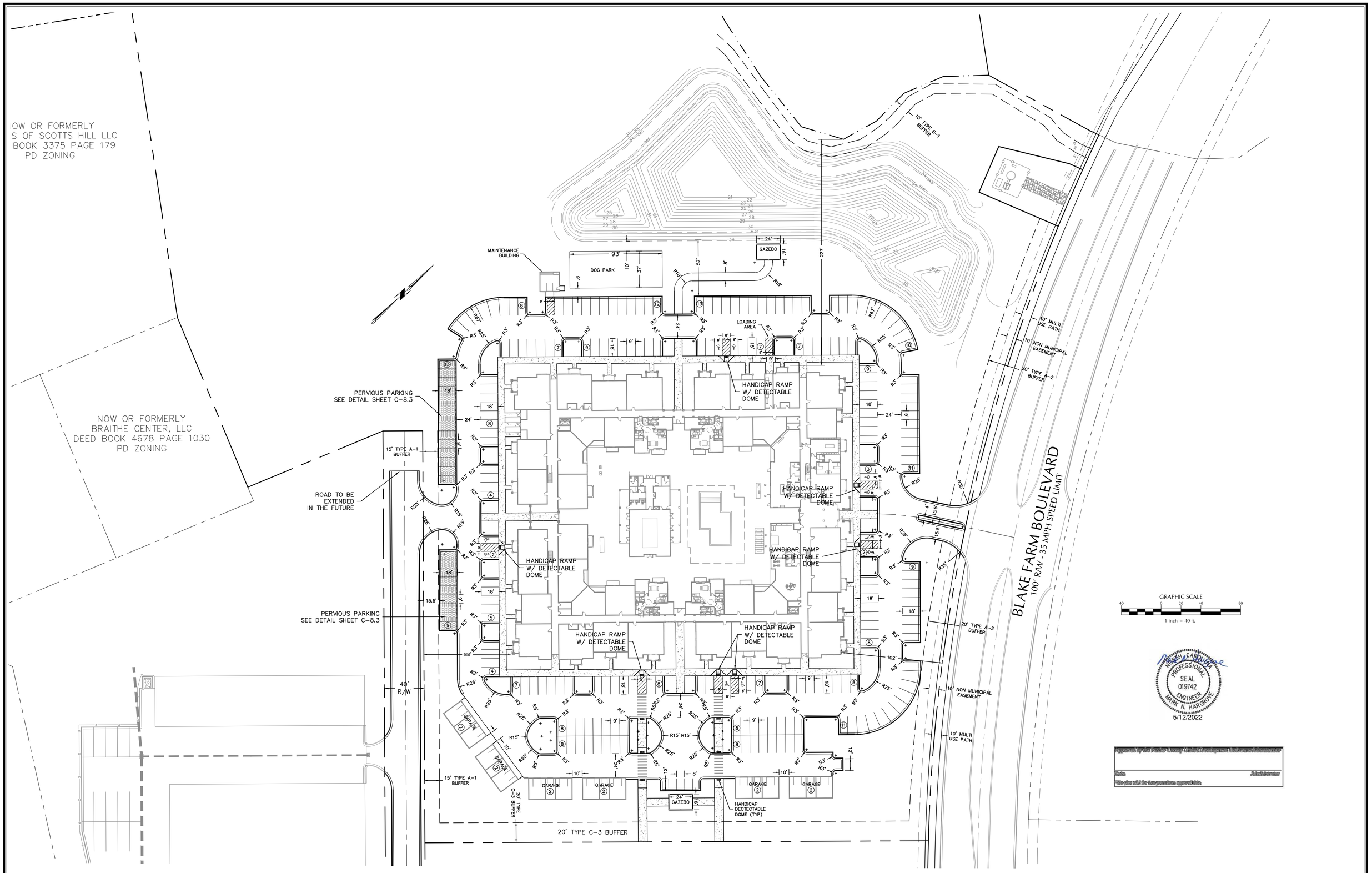

No.	Revision	Date	By
1	REVISED FOR TRC COMMENTS	5/12/22	MNH

Designer MNH	Scale AS SHOWN
Drawn By MNH	Date MAY, 2022
Checked By MNH	Job No.

OAK GROVE @ BLAKE FARM

PENDER COUNTY NORTH CAROLINA

TRASK LAND COMPANY, INC.
1022 ASHES DRIVE, SUITE 201
WILMINGTON, NC 28405

PORT CITY CONSULTING ENGINEERS, PLLC
6216 STONEBRIDGE ROAD
WILMINGTON, NC 28409
910-599-1744 LICENSE No. P-1032

SITE LAYOUT PLAN

Sheet No. C-3

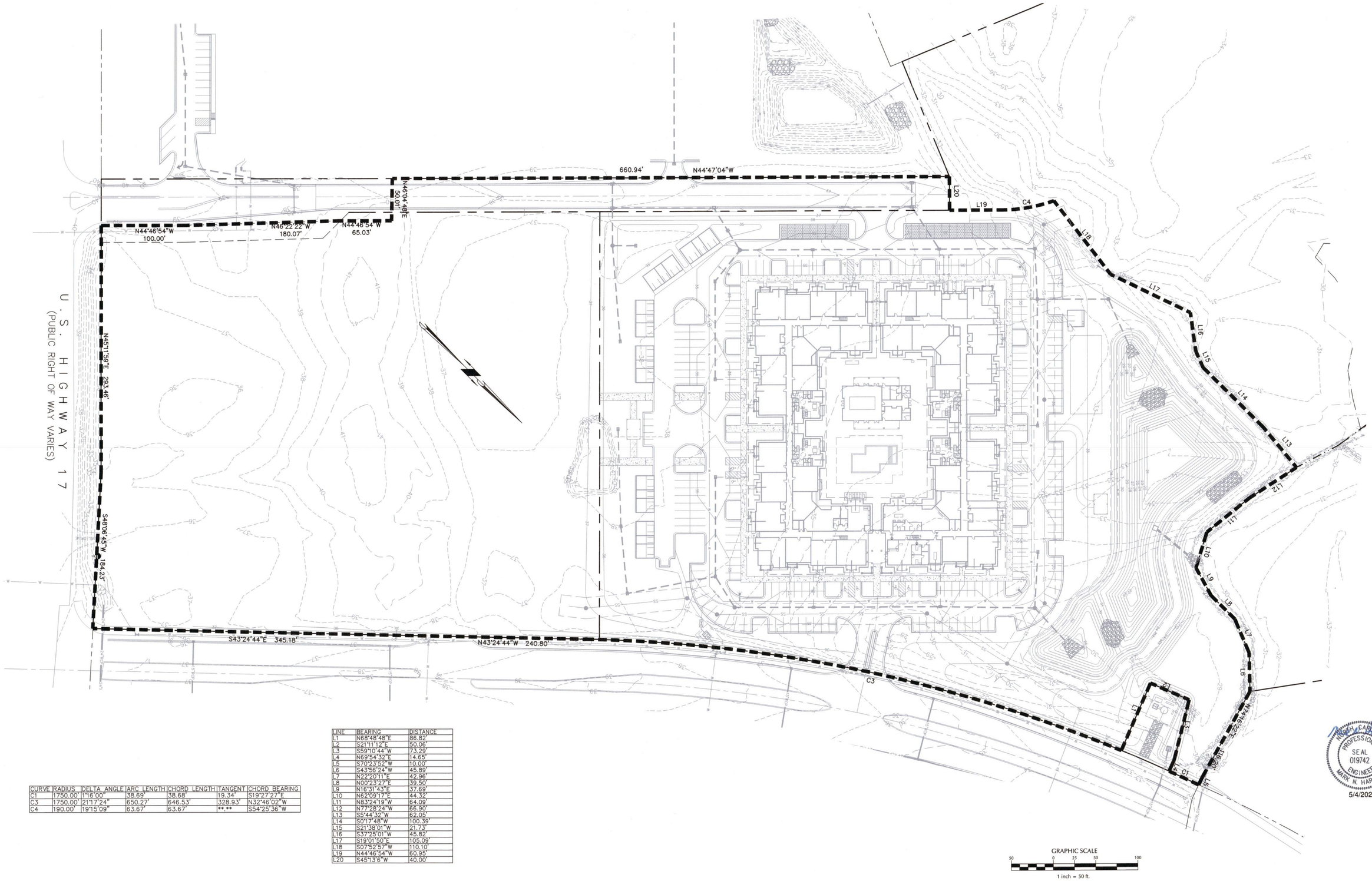

CURVE	RADIUS	DELTA ANGLE	ARC LENGTH	CHORD LENGTH	TANGENT	CHORD BEARING
C1	1750.00'	1°16'00"	38.69'	38.68'	19.34'	S19°27'27"E
C3	1750.00'	21°17'24"	650.27'	646.53'	328.93'	N32°46'02"W
C4	190.00'	19°15'09"	63.67'	63.67'	**.**	S54°25'36"W

LINE	BEARING	DISTANCE
L1	N68°48'48"E	86.82'
L2	S21°11'12"E	50.06'
L3	S59°10'44"W	73.29'
L4	N69°54'32"E	14.65'
L5	S70°23'52"W	10.00'
L6	S43°56'24"W	45.89'
L7	N22°20'11"E	42.96'
L8	N00°23'27"E	39.50'
L9	N16°31'43"E	37.69'
L10	N62°09'17"E	44.32'
L11	N83°24'19"W	64.09'
L12	N77°28'24"W	66.90'
L13	S5°44'32"W	62.05'
L14	S0°17'48"W	100.39'
L15	S21°38'01"W	21.73'
L16	S37°25'01"W	45.82'
L17	S19°01'50"E	105.09'
L18	S07°52'57"W	110.10'
L19	N44°46'54"W	60.95'
L20	S45°13'6"W	40.00'

No.	Revision	Date	By

Designer MNH	Scale AS SHOWN
Drawn By MNH	Date MAY, 2022
Checked By MNH	Job No.

OAK GROVE @ BLAKE FARM

PENDER COUNTY NORTH CAROLINA

TRASK LAND COMPANY, INC.
1022 ASHES DRIVE, SUITE 201
WILMINGTON, NC 28405

PORT CITY CONSULTING ENGINEERS, PLLC
6216 STONEBRIDGE ROAD
WILMINGTON, NC 28409
910-599-1744 LICENSE No. P-1032

PROJECT LIMITS

Sheet No.
C-3.1

Line ID	Line Length (ft)	Veloc (ft/s)	Pipe Size (in)	Pipe Slope (%)	Inv Elev Dn (ft)	Inv Elev Up (ft)	Grnd/Rim Dn (ft)	Grnd/Rim Up (ft)
P-1	52	6.15	42	0.48	27.00	27.25	NA	35.10
P-2	112	7.40	36	0.50	27.25	27.81	35.10	34.33
P-3	150	5.04	36	0.50	27.81	28.56	34.33	34.33
P-4	94	4.79	36	0.50	28.56	29.03	34.33	35.00
P-5	43	4.79	36	0.51	29.03	29.25	35.00	34.50
P-6	90	4.34	36	0.50	29.25	29.70	34.50	35.00
P-7a	80	0.37	15	0.75	29.70	30.30	35.00	35.00
P-7b	115	0.17	15	0.50	31.07	31.65	35.00	35.00
P-8	118	2.24	15	0.75	30.30	31.18	34.50	34.50
P-9	66	4.64	15	2.00	29.15	30.48	35.10	34.33
R-1	39	3.12	6	2.56	32.00	33.00	34.33	36.10
R-2	30	2.31	6	4.00	33.00	34.20	36.10	36.10
R-3	18	0.85	6	4.00	33.00	33.72	36.10	36.10
R-4	39	3.18	6	1.00	33.00	33.39	34.33	36.10
R-5	51	2.36	6	1.00	33.39	33.90	36.10	36.10
R-6	56	1.69	6	1.00	33.39	33.95	36.10	36.10
R-7	39	3.25	6	1.00	32.00	32.39	34.33	36.10
R-8	36	1.40	6	4.47	32.39	34.00	36.10	36.10
R-9	52	2.57	6	3.88	32.39	34.41	36.10	36.10
R-10	39	1.91	8	4.00	30.94	32.50	34.50	36.10
R-11	90	2.80	6	2.00	32.50	34.30	36.10	36.10
R-12	42	0.70	6	2.00	32.50	33.34	36.10	36.10

NOTE: CULVERT P-1 TO BE RCP CL III PIPE. ALL OTHER PIPE (P-*) MAY BE HDPE DOUBLE WALLED PIPE. ROOF DRAIN HEADER PIPE (R-*) TO BE HDPE OR C900 PVC. HDPE TO HAVE WATER TIGHT JOINTS

Structure ID	Grnd/Rim Up (ft)	Inv Elev Up (ft)
MH-1	35.10	27.25
DI-2	34.33	27.81
DI-3	34.33	28.56
MH-4	35.00	29.03
DI-5	34.50	29.25
DI-6	35.00	29.70
DI-7A	35.00	30.30
DI-7B	35.00	31.65
DI-8	34.50	31.18
DI-9	34.33	30.48
DI-2	36.10	33.00
DI-2	36.10	34.20
DI-2	36.10	33.72
DI-2	36.10	33.39

CI-CURB INLET
DI-DROP INLET
MH-MANHOLE

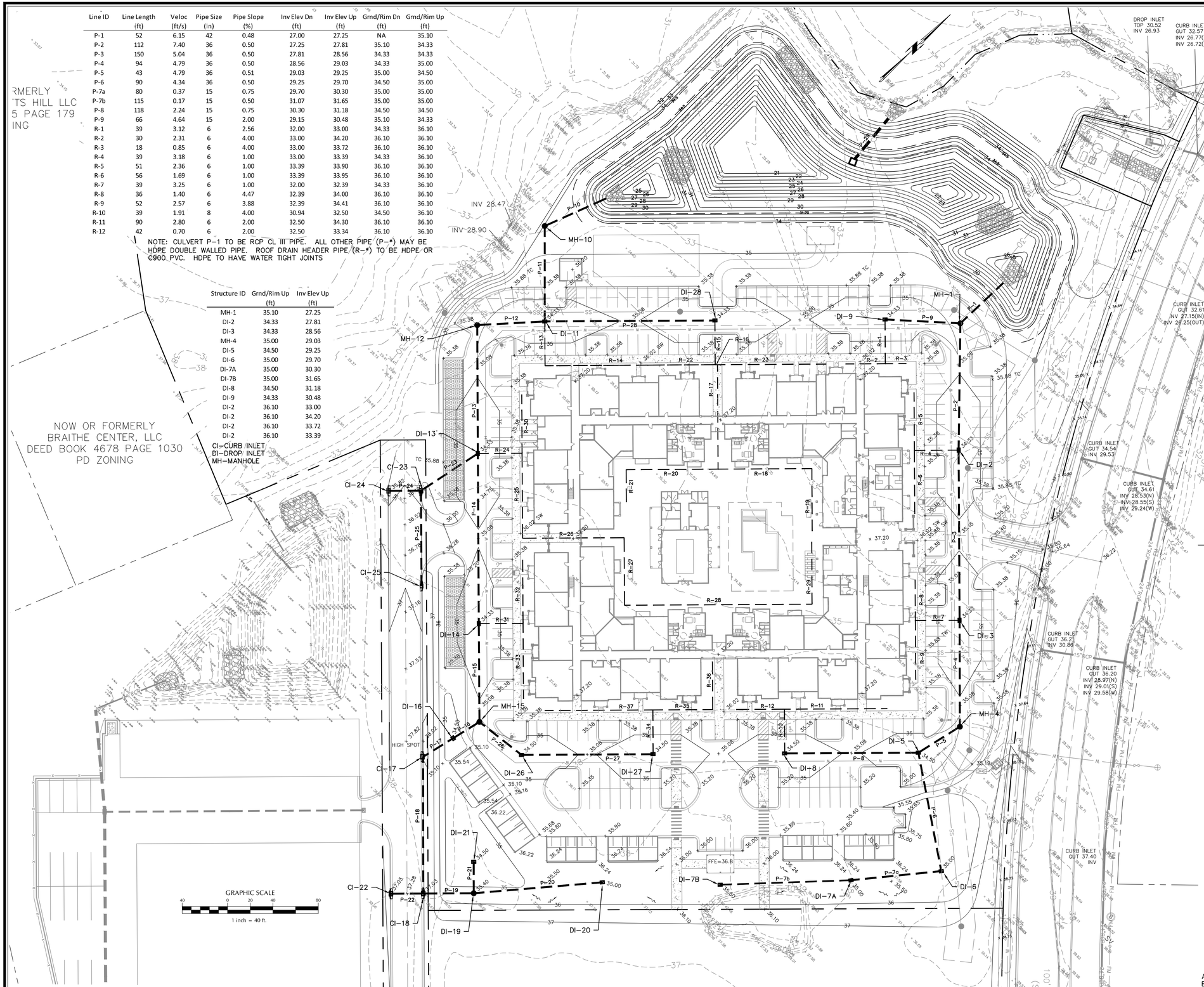

NOTE:

1. THERE ARE NO WETLANDS OR SURFACE WATER WITHIN THE PROJECT LIMITS. A 50-FT PROTECTED VEGETATED SETBACK IS NOT REQUIRED AND A PROTECTED RIPARIAN BUFFER IS NOT REQUIRED. THE PROJECT SITE LIMITS ARE NOT LOCATED IN A REGULATORY FLOOD ZONE.

NOTE:

1) ALL ROOF DRAIN DOWNSPOUTS SHALL CONNECT TO THE STORM DRAINAGE SYSTEM.
2) ALL ROOF DRAINAGE PIPING SHALL BE HDPE OR C900 PVC.

Structure ID	Grnd/RimUp (ft)	Inv ElevUp (ft)
MH-10	34.00	29.18
DI-11	34.33	29.43
MH-12	35.10	29.61
DI-13	34.33	29.95
DI-14	34.33	30.40
MH-15	34.95	30.66
DI-16	34.50	30.74
CI-17	37.98	30.84
CI-18	37.03	31.20
DI-19	35.40	31.33
DI-20	35.20	31.66
DI-21	34.50	31.46
CI-22	37.03	33.50
CI-23	35.82	31.45
CI-24	35.82	31.88
CI-25	36.73	33.13
DI-26	34.50	30.80
DI-27	34.50	31.15
DI-28	34.33	30.93

CI-CURB INLET
DI-DROP INLET
MH-MANHOLE

Line ID	LineLength (ft)	Veloc (ft/s)	PipeSize (in)	PipeSlope (%)	Inv ElevDn (ft)	Inv ElevUp (ft)	Grnd/RimDn (ft)	Grnd/RimUp (ft)
P-10	60	7.62	30	1.14	28.50	29.18	NA	34.00
P-11	84	5.17	30	0.30	29.18	29.43	34.00	34.33
P-12	60	2.93	30	0.30	29.43	29.61	34.33	35.10
P-13	113	4.58	24	0.30	29.61	29.95	35.10	34.33
P-14	150	2.69	24	0.30	29.95	30.40	34.33	34.33
P-15	87	2.11	24	0.30	30.40	30.66	34.33	34.95
P-16	27	1.57	18	0.29	30.66	30.74	34.95	34.50
P-17	31	1.55	18	0.32	30.74	30.84	34.50	37.98
P-18	120	2.23	15	0.30	30.84	31.20	37.98	37.03
P-19	45	0.68	15	0.29	31.20	31.33	37.03	35.40
P-20	108	0.35	15	0.31	31.33	31.66	35.40	35.20
P-21	34	0.43	15	0.39	31.33	31.46	35.40	34.50
P-22	29	2.45	15	0.70	33.30	33.50	37.03	37.03
P-23	60	0.80	15	2.50	29.95	31.45	34.33	35.82
P-24	29	0.58	15	1.51	31.45	31.88	35.82	35.82
P-25	84	1.27	15	2.00	31.45	33.13	35.82	36.73
P-26	47	2.53	18	0.30	30.66	30.80	34.95	34.50
P-27	116	2.49	15	0.30	30.80	31.15	34.50	34.50
P-28	150	4.70	15	1.00	29.43	30.93	34.33	34.33
P-29	47	4.80	30	5.32	26.50	29.00	NA	33.00
R-13	39	3.30	8	1.51	32.50	33.09	34.33	36.10
R-14	75	2.88	8	1.00	33.09	33.84	36.10	36.10
R-15	39	3.40	15	1.00	30.93	31.32	34.33	36.05
R-16	2	3.18	15	1.00	31.32	31.34	36.05	36.05
R-17	92	4.69	12	1.00	31.34	32.26	36.05	36.80
R-18	83	2.30	8	1.00	32.26	33.09	36.80	36.80
R-19	55	0.98	8	1.00	33.09	33.64	36.80	36.80
R-20	81	2.13	8	1.00	32.26	33.07	36.80	36.80
R-21	28	0.79	8	0.99	33.07	33.35	36.80	36.80
R-22	65	1.40	6	1.00	31.32	31.97	36.05	36.10
R-23	98	1.40	6	0.98	31.34	32.30	36.05	36.10
R-24	39	3.56	15	1.00	30.80	31.19	34.33	36.10
R-25	75	3.72	15	2.11	31.19	32.77	36.10	36.05
R-26	90	3.97	15	0.76	32.77	33.45	36.05	36.80
R-27	90	3.06	12	0.50	33.45	33.90	36.80	36.80
R-28	165	2.97	10	0.50	33.90	34.73	36.80	36.80
R-29	55	1.02	8	0.49	34.73	35.00	36.80	36.80
R-30	52	2.10	6	3.31	31.19	32.91	36.10	36.10
R-31	39	3.07	6	5.00	30.40	32.35	34.33	36.10
R-32	56	1.05	6	2.00	32.35	33.47	36.10	36.10
R-33	66	2.10	6	2.00	32.35	33.67	36.10	36.10
R-34	39	3.07	8	2.00	31.15	31.93	34.50	36.10
R-37	95	1.77	8	2.00	31.93	33.83	36.10	36.10
R-35	53	2.42	6	2.00	31.93	32.99	36.10	36.10
R-36	42	1.75	6	2.00	32.99	33.83	36.10	37.00

ALL PIPES (P-*) MAY BE HDPE DOUBLE WALLED PIPE. ROOF DRAIN HEADER PIPE (R-*) TO BE HDPE OR C900 PVC. HDPE TO HAVE WATER TIGHT JOINTS

No.	Revision	Date	By
1	REVISED PER TRC COMMENTS	5/12/22	MNH

Designer	MNH	Scale	AS SHOWN
Drawn By	MNH	Date	MAY, 2022
Checked By	MNH	Job No.	

OAK GROVE @ BLAKE FARM

PENDER COUNTY NORTH CAROLINA

TRASK LAND COMPANY, INC.
1022 ASHES DRIVE, SUITE 201
WILMINGTON, NC 28405

PORT CITY CONSULTING ENGINEERS, PLLC
6216 STONEBRIDGE ROAD
WILMINGTON, NC 28409
910-599-1744 LICENSE No. P-1032

GRADING & DRAINAGE PLAN

Sheet No.
C-4

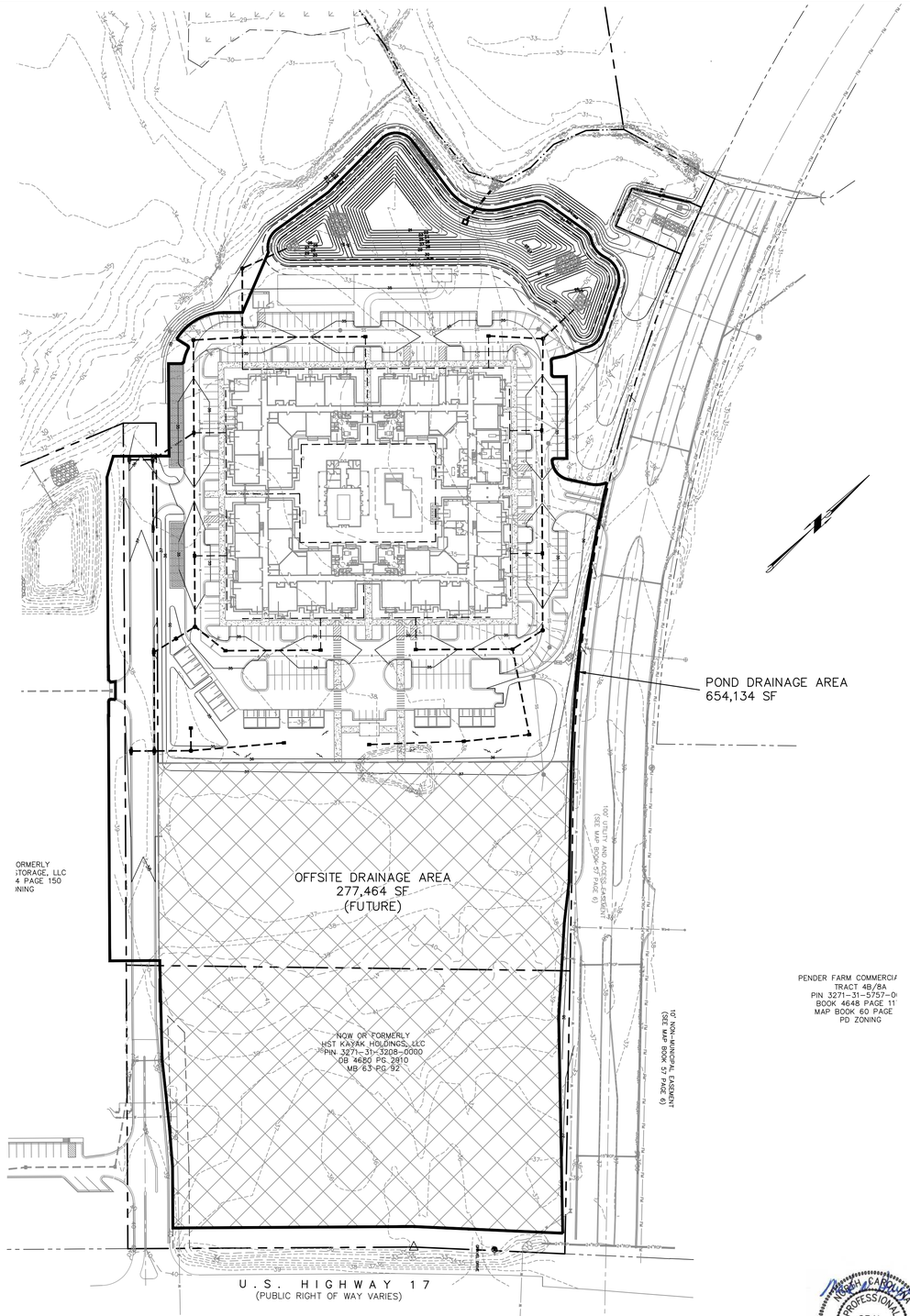

POND DRAINAGE AREA

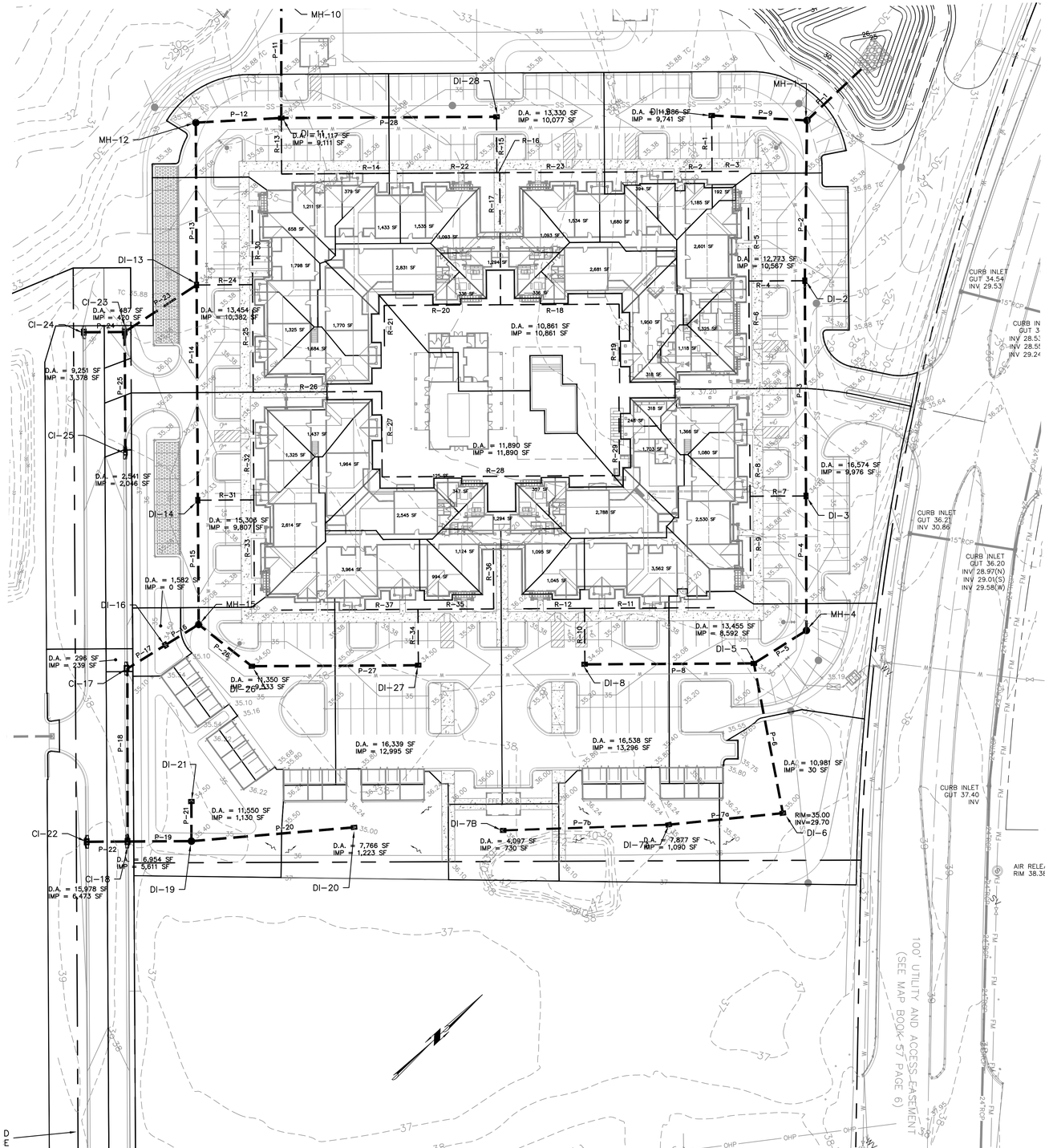

INLET DRAINAGE AREA

NORTH CAROLINA PROFESSIONAL SEAL 019742 ENGINEER MARK N. HARGROVE
5/4/2022

No.	Revision	Date	By

Designer MNH	Scale AS SHOWN
Drawn By MNH	Date MAY, 2022
Checked By MNH	Job No.

OAK GROVE @ BLAKE FARM

PENDER COUNTY NORTH CAROLINA

TRASK LAND COMPANY, INC.
1022 ASHES DRIVE, SUITE 201
WILMINGTON, NC 28405

PORT CITY CONSULTING ENGINEERS, PLLC
6216 STONEBRIDGE ROAD
WILMINGTON, NC 28409
910-599-1744 LICENSE No. P-1032

DRAINAGE AREA PLAN

Sheet No.
C-4.1

EROSION AND SEDIMENT CONTROL SEQUENCE

1. INSTALL CONSTRUCTION ENTRANCE AND PERIMETER SILT FENCE AS SHOWN ON THE PLANS. CLEARING ONLY AS NECESSARY TO INSTALL THESE DEVICES.
2. INSTALL THE WET POND THAT WILL ALSO ACT AS A SEDIMENT BASIN. CLEAR ONLY AS NECESSARY TO INSTALL THE WET POND.
3. CLEAR AND REMOVE FROM SITE ALL TREES, ROOTS, ROOT MAT, ETC. FROM THE AREA WITHIN DESIGNATED CLEARING LIMITS.
4. INSTALL DIVERSION BERMS TO DIRECT ANY RUNOFF TO THE WET POND UNTIL STORM CULVERTS AND CURB/DROP INLETS ARE INSTALLED. SITE RUNOFF SHALL BE DIRECTED TO THE WET POND/SEDIMENT BASIN.
5. PLANT GRASS OVER ALL GRADED AREAS AS SHOWN IN THE TABLE ON C-1 OF CEASE OF ANY GRADING ACTIVITY.
6. CONTRACTOR SHALL BE RESPONSIBLE FOR CLEANING AND RESTORING TO PRE-CONSTRUCTION CONDITIONS ANY AREAS OUTSIDE THE PROJECT LIMITS THAT MAY INADVERTENTLY BE DAMAGED DUE TO THE FAILURE OF THE EROSION MEASURES.
7. DURING GRADING AND AFTER GRADING HAS BEEN COMPLETED, CONTRACTOR SHALL CONTINUE TO MAINTAIN PERMANENT AND TEMPORARY EROSION CONTROL MEASURES UNTIL FINAL INSPECTION AND APPROVAL BY THE NC LAND QUALITY SECTION.
8. WATER, FERTILIZE, MOW AND MAINTAIN SPRIGGED, SODDED AND PLANTED AREAS UNTIL FINAL APPROVAL BY THE NC LAND QUALITY SECTION.
9. ANY BORROW MATERIAL BROUGHT ONTO SITE MUST BE FROM A LEGALLY OPERATED MINE OR OTHER APPROVED SOURCE.
10. ANY EXCESS MATERIAL REMOVED FROM SITE MUST BE HAULED TO A LEGALLY OPERATED MINE OR OTHER APPROVED SOURCE.

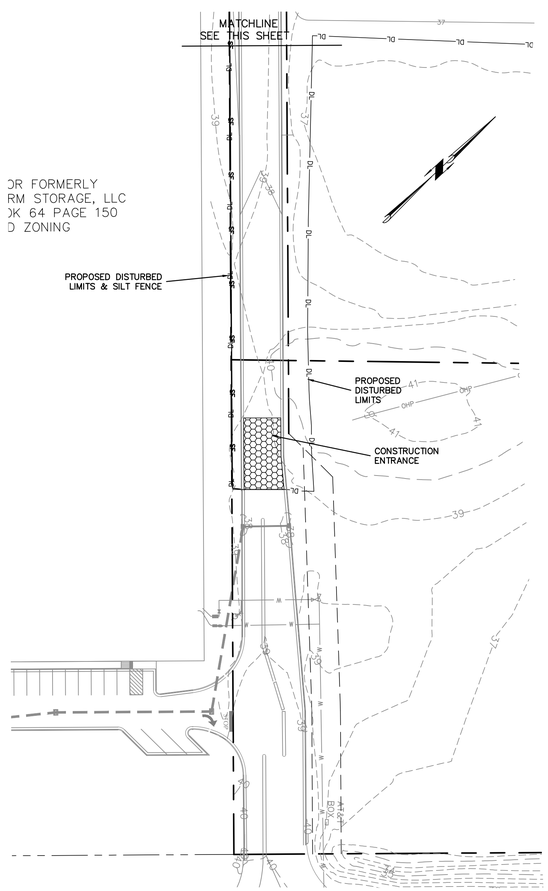

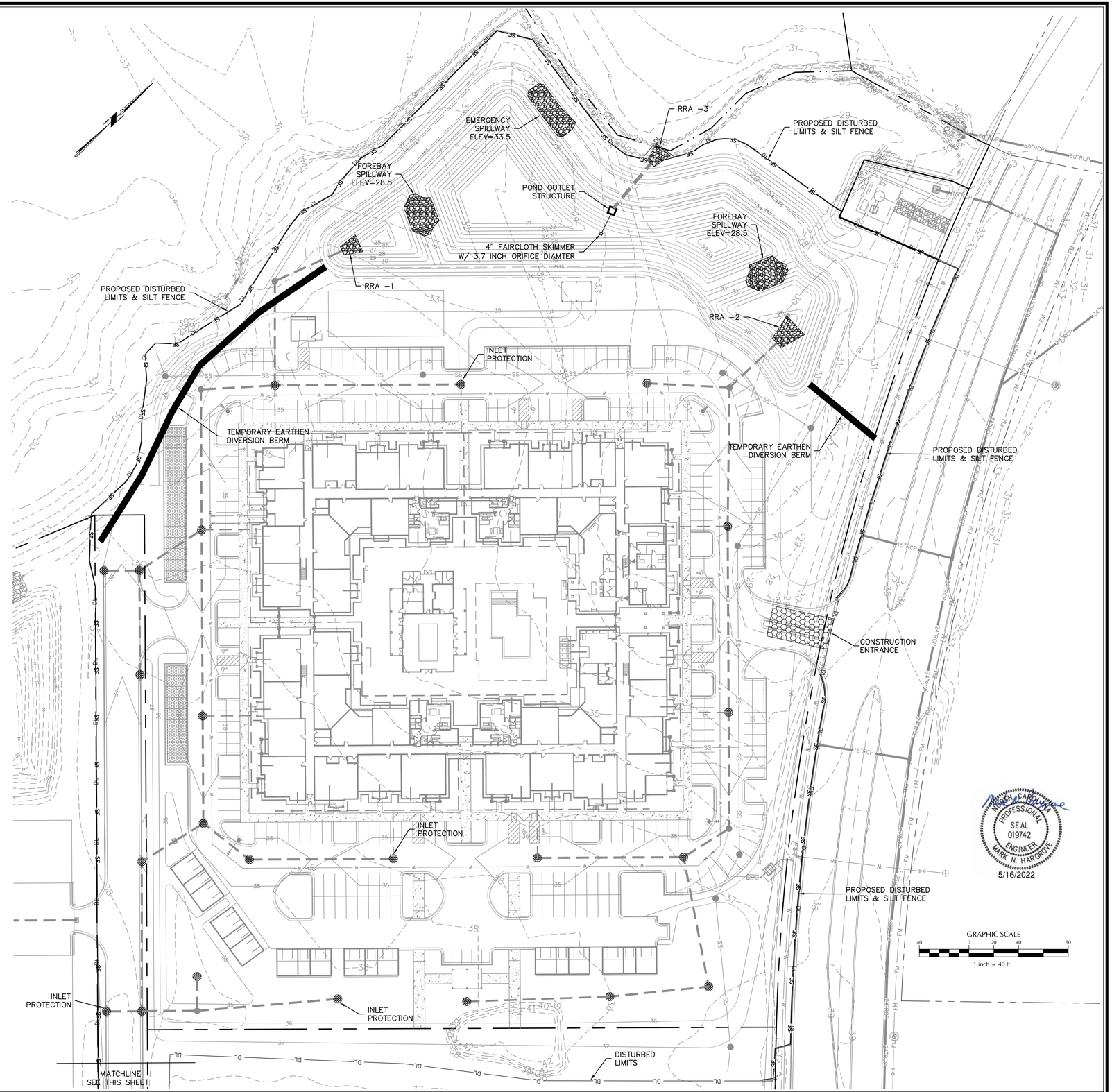

NORTH CAROLINA PROFESSIONAL SEAL 019742 ENGINEER MARK N. HARGROVE
5/16/2022

No.	Revision	Date	By
1	REVISED PER NC LAND QUALITY COMMENTS	5/16/22	MNH

Designer MNH	Scale AS SHOWN
Drawn By MNH	Date MAY, 2022
Checked By MNH	Job No.

OAK GROVE @ BLAKE FARM

PENDER COUNTY NORTH CAROLINA

TRASK LAND COMPANY, INC.
1022 ASHES DRIVE, SUITE 201
WILMINGTON, NC 28405

PORT CITY CONSULTING ENGINEERS, PLLC
6216 STONEBRIDGE ROAD
WILMINGTON, NC 28409
910-599-1744 LICENSE No. P-1032

EROSION CONTROL PLAN

Sheet No. C-5

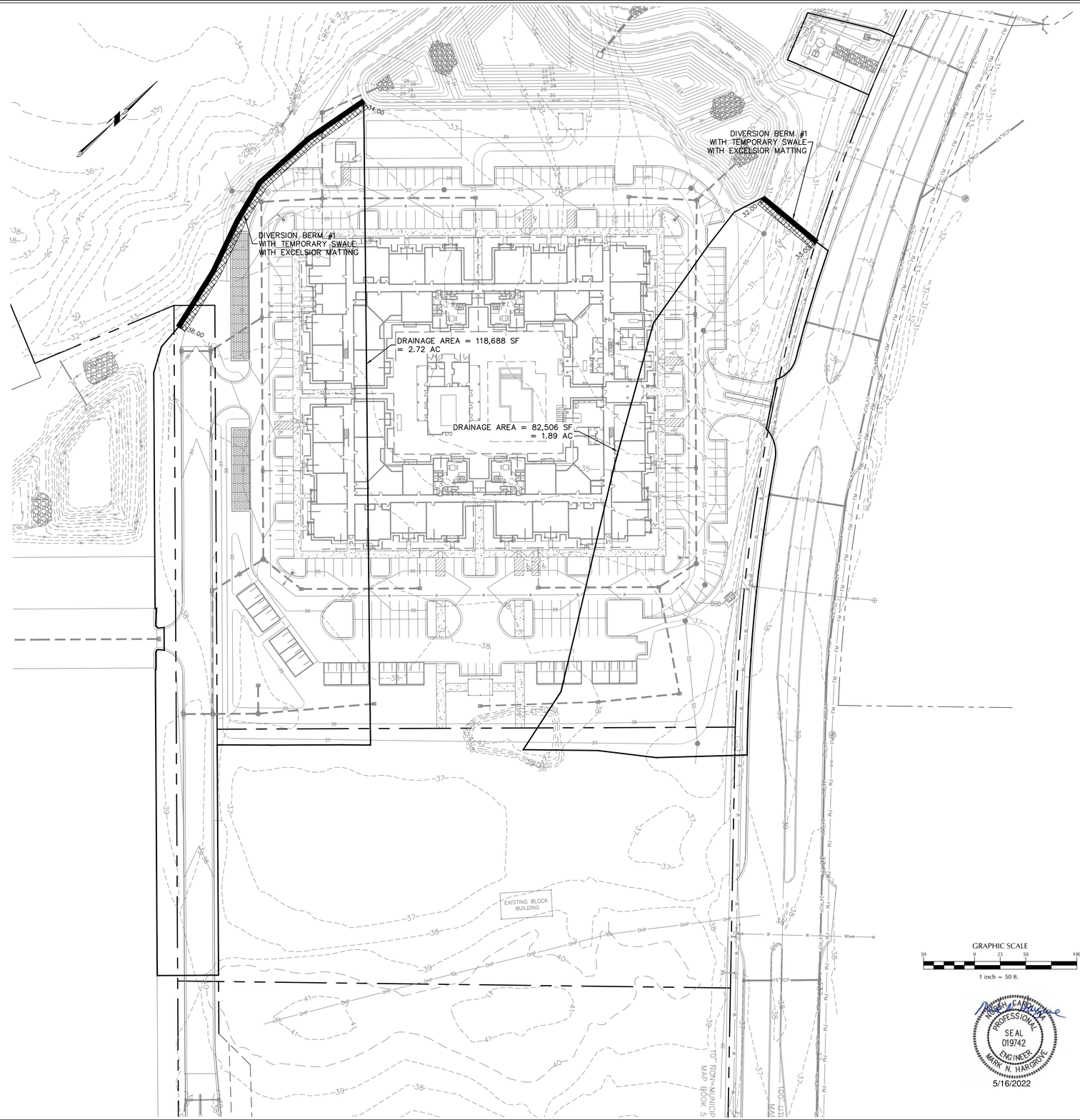

No.	Revision	Date	By

Designer MNH	Scale AS SHOWN
Drawn By MNH	Date MAY, 2022
Checked By MNH	Job No.

OAK GROVE @ BLAKE FARM

PENDER COUNTY NORTH CAROLINA

TRASK LAND COMPANY, INC.
1022 ASHES DRIVE, SUITE 201
WILMINGTON, NC 28405

PORT CITY CONSULTING
ENGINEERS, PLLC
6216 STONEBRIDGE ROAD
WILMINGTON, NC 28409
910-599-1744 LICENSE No. P-1032

DIVERSION BERM DRAINAGE AREAS

Sheet No.
C-5.1

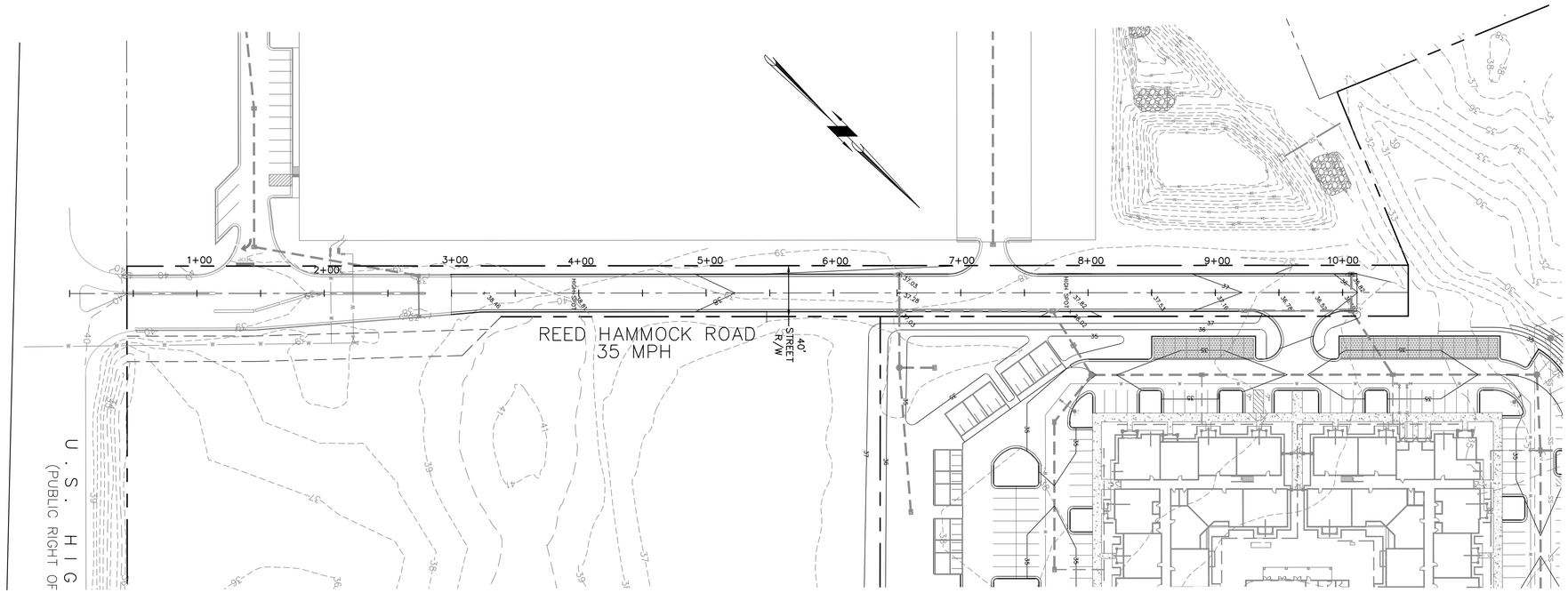

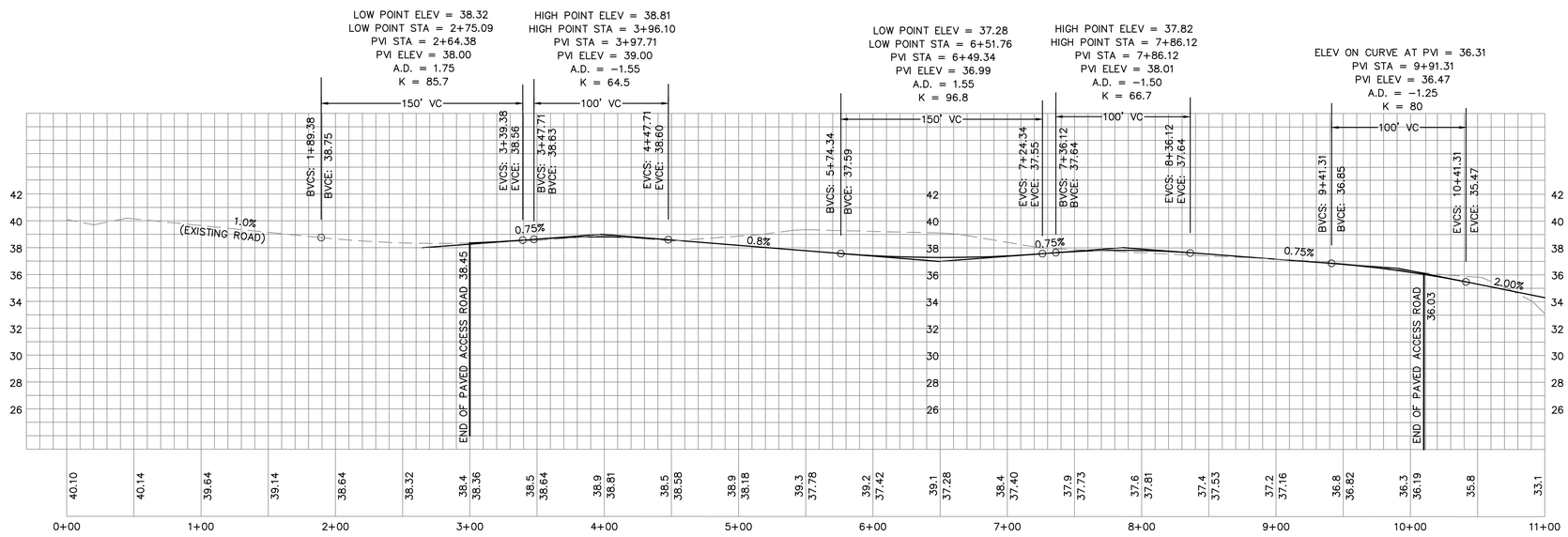

5/12/2022

GRAPHIC SCALE

50 0 25 50 100

1 inch = 50 ft.

No.	Revision	Date	By
1	REVISED PER TRC COMMENTS	5/12/22	MNH

Designer MNH	Scale AS SHOWN
Drawn By MNH	Date MAY, 2022
Checked By MNH	Job No.

OAK GROVE @ BLAKE FARM

PENDER COUNTY NORTH CAROLINA

TRASK LAND COMPANY, INC.
1022 ASHES DRIVE, SUITE 201
WILMINGTON, NC 28405

PORT CITY CONSULTING ENGINEERS, PLLC
6216 STONEBRIDGE ROAD
WILMINGTON, NC 28409
910-599-1744 LICENSE No. P-1032

ROAD PLAN/PROFILE

Sheet No.
C-6

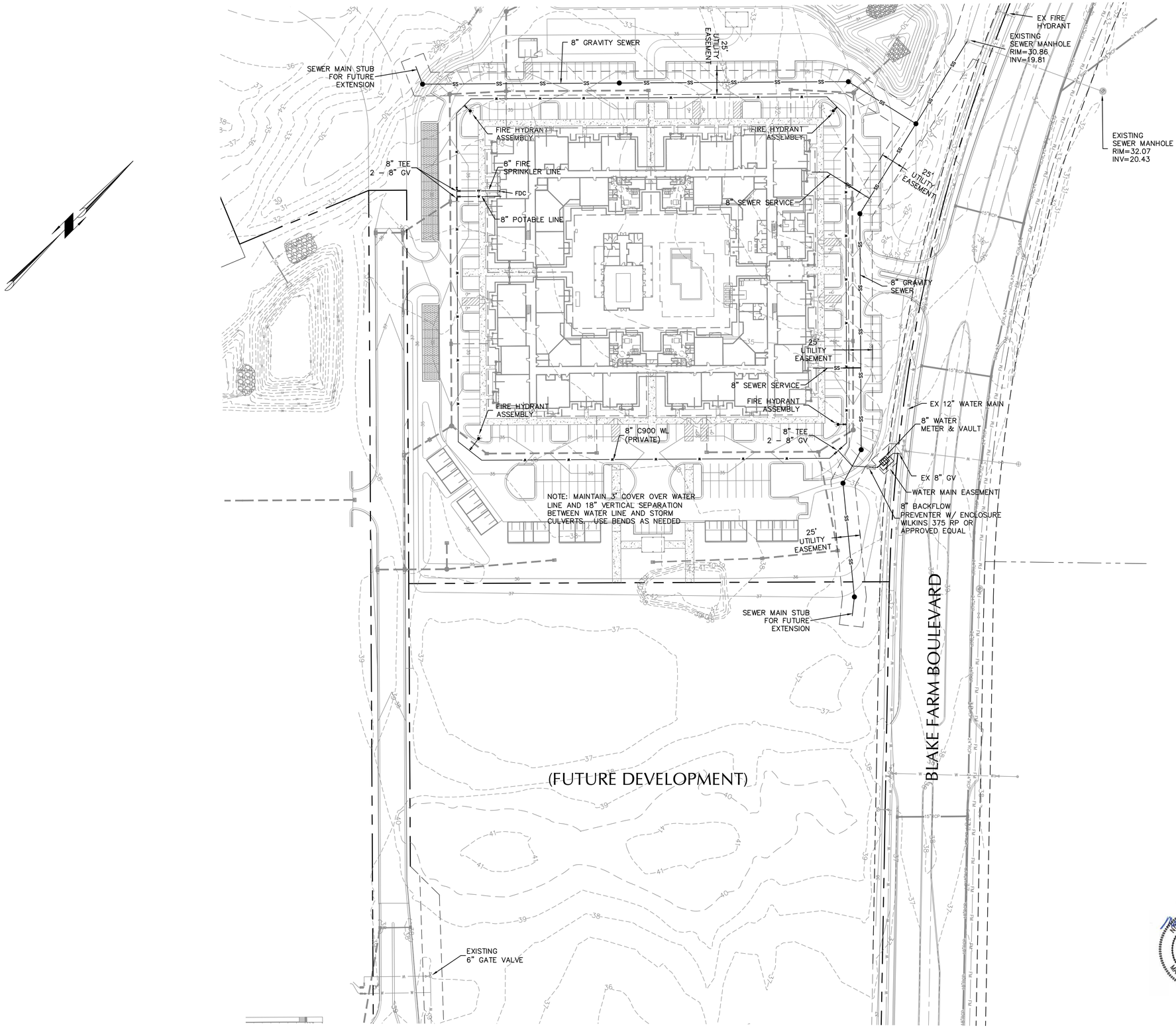

NORTH CAROLINA PROFESSIONAL SEAL 019742 ENGINEER MARK N. HARGROVE
5/4/2022

GRAPHIC SCALE
50 0 25 50 100
1 inch = 50 ft.

No.	Revision	Date	By

Designer MNH	Scale AS SHOWN
Drawn By MNH	Date MAY, 2022
Checked By MNH	Job No.

OAK GROVE @ BLAKE FARM

PENDER COUNTY NORTH CAROLINA

TRASK LAND COMPANY, INC.
1022 ASHES DRIVE, SUITE 201
WILMINGTON, NC 28405

PORT CITY CONSULTING ENGINEERS, PLLC
6216 STONEBRIDGE ROAD
WILMINGTON, NC 28409
910-599-1744 LICENSE No. P-1032

UTILITY PLAN

Sheet No.
C-7

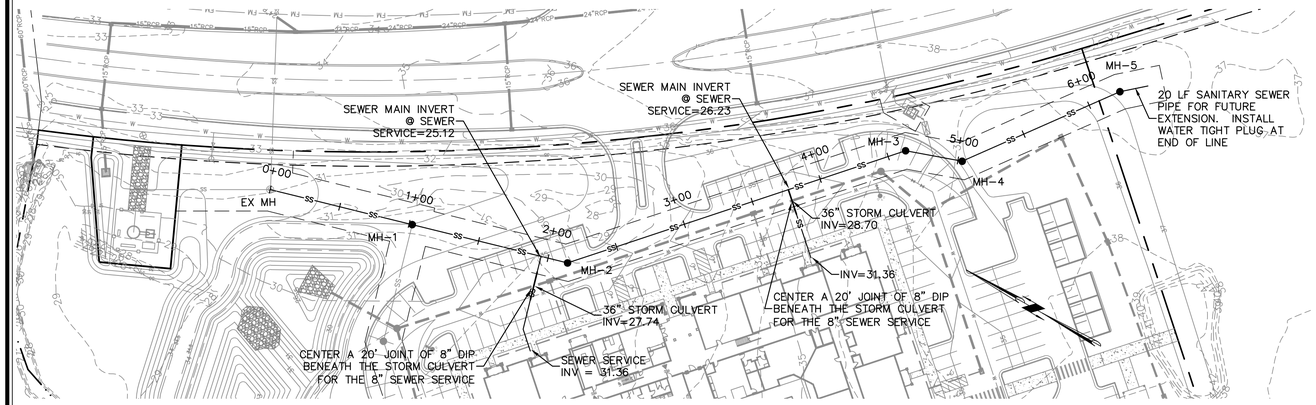

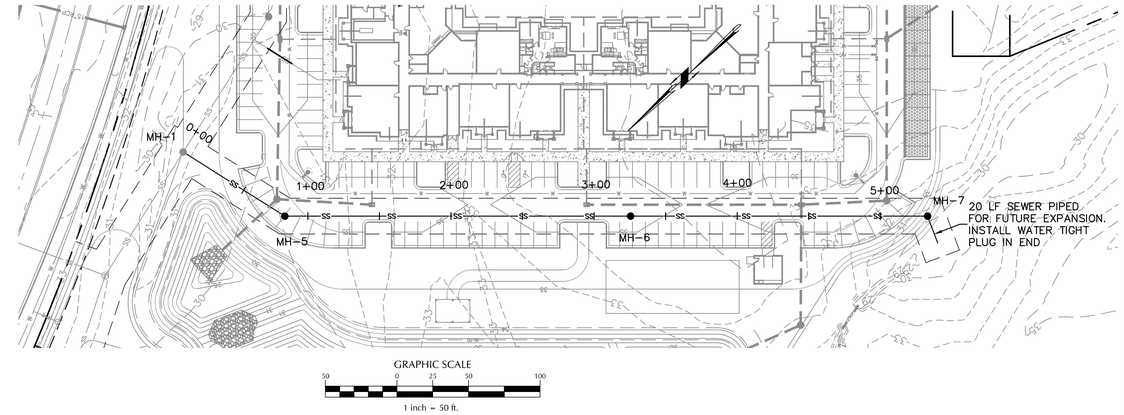

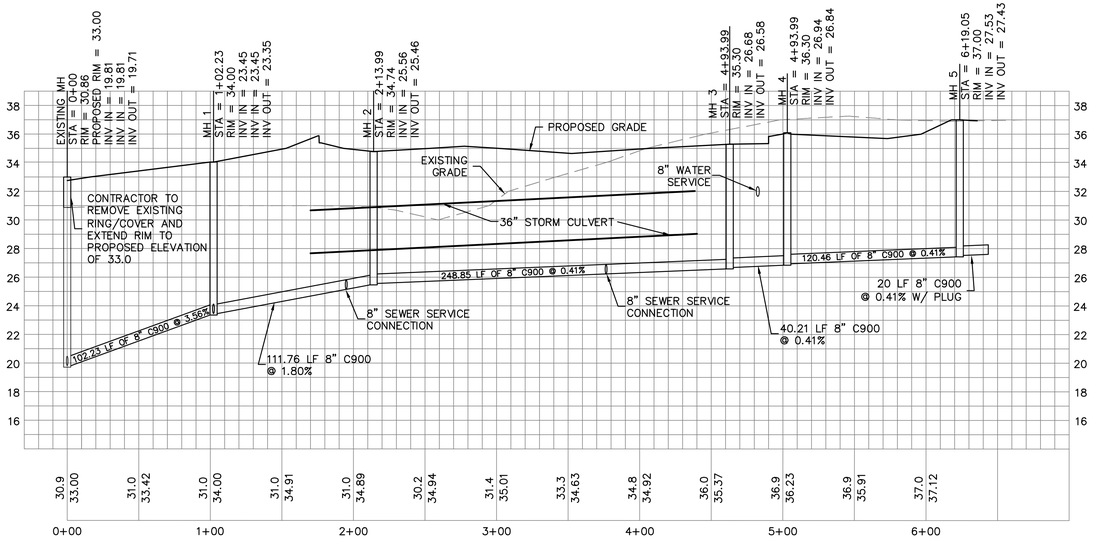

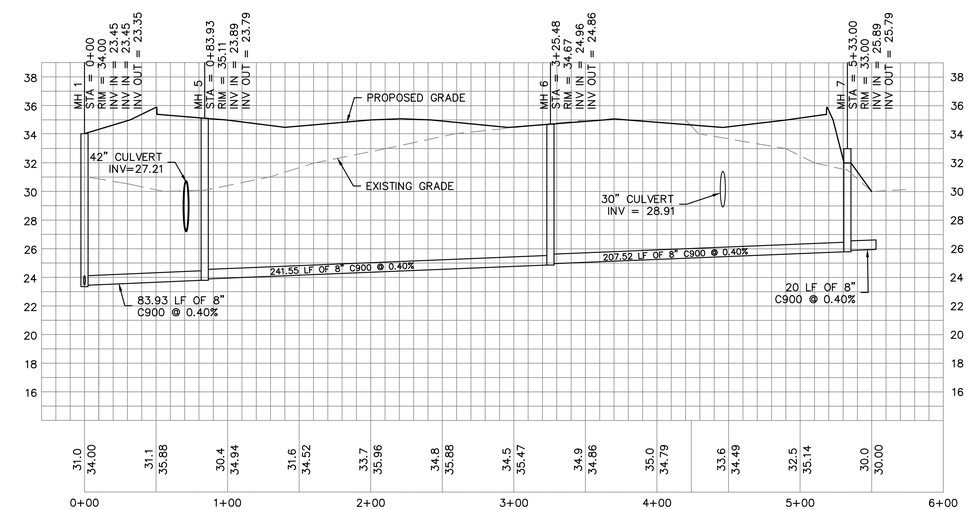

GRAPHIC SCALE
1 inch = 50 ft.

PROFESSIONAL SEAL 019742 ENGINEER MARK N. HARGROVE
5/4/2022

No.	Revision	Date	By

Designer MNH	Scale AS SHOWN
Drawn By MNH	Date MAY, 2022
Checked By MNH	Job No.

OAK GROVE @ BLAKE FARM

PENDER COUNTY NORTH CAROLINA

TRASK LAND COMPANY, INC.
1022 ASHES DRIVE, SUITE 201
WILMINGTON, NC 28405

PORT CITY CONSULTING ENGINEERS, PLLC
6216 STONEBRIDGE ROAD
WILMINGTON, NC 28409
910-599-1744 LICENSE No. P-1032

SEWER PLAN/PROFILE

Sheet No.
C-7.1

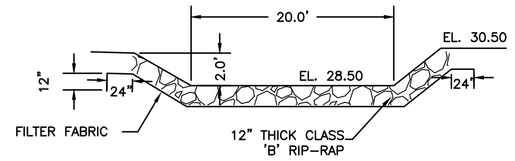

FOREBAY RIP-RAP
N.T.S.

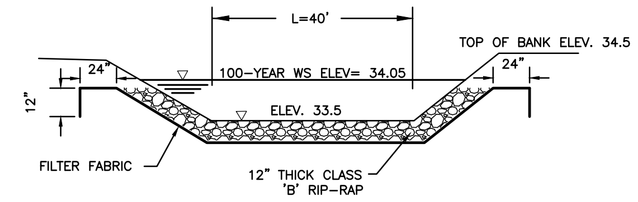

EMERGENCY SPILLWAY
N.T.S.

NOTES:

1. DO NOT PLANT TREES WITHIN 10 FEET OF THE INLET OR OUTLET PIPES, SPILLWAYS OR FLOW SPREADERS. TREE SPECIES WITH WATER-SEEKING ROOTS SUCH AS WEEPING WILLOWS AND POPLARS, SHOULD BE AVOIDED WITHIN 50 FEET OF PIPES OR MANMADE STRUCTURES. EVERGREEN TREES WHICH PRODUCE RELATIVELY LITTLE LEAF-FALL ARE PREFERRED IN AREAS DRAINING TO DETENTION DEVICES. TREES SHOULD BE SET BACK SO THAT BRANCHES DO NOT EXTEND OVER THE PERMANENT POOL.

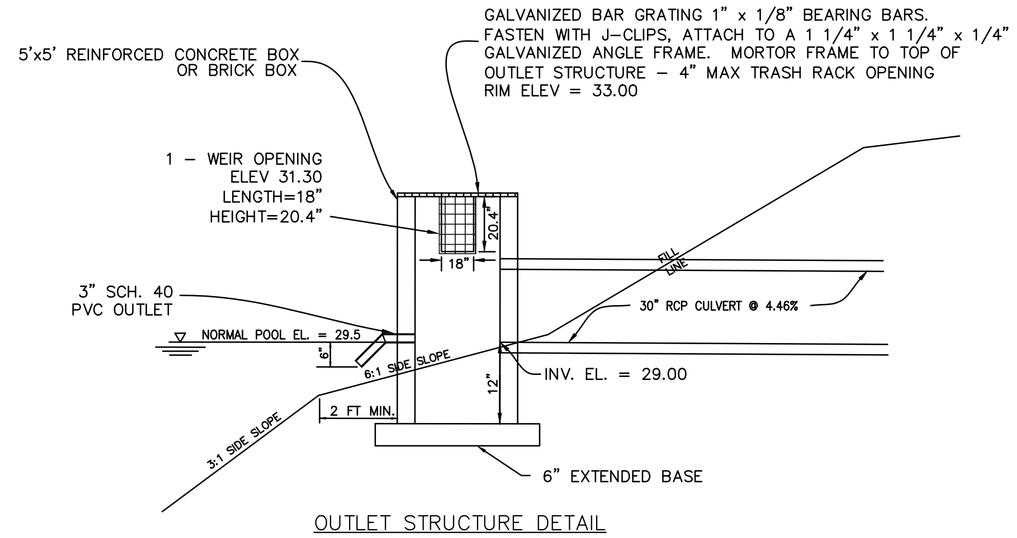

OUTLET STRUCTURE DETAIL
N.T.S.

NOTES:

1. DESIGN ELEVATIONS FOR WET DETENTION BASIN ARE TO AN ELEVATION OF 21.0 IN THE MAIN POND AND 25.0 IN THE FOREBAY WITH SEDIMENT STORAGE DOWN TO 20.0 IN THE MAIN POND AND 24.0 IN THE FOREBAY.
2. ALL IMPERVIOUS SITE AREA TO BE DRAINED TO PROPOSED STORM SEWER SYSTEM AND DISCHARGED TO THE WET DETENTION POND.
3. POND WILL BE PUMPED DOWN BY MECHANICAL MEANS IN CASE OF EMERGENCY.
4. PRIOR TO USE AS A WET DETENTION BASIN, SEDIMENT BASIN WILL BE MUCKED OUT.
5. POND SIDE SLOPES TO BE SODDED WITH CENTIPEDE GRASS OR EQUIVALENT.
6. ALL SLOPES ABOVE PERMANENT POOL TO BE 3:1 MAX.

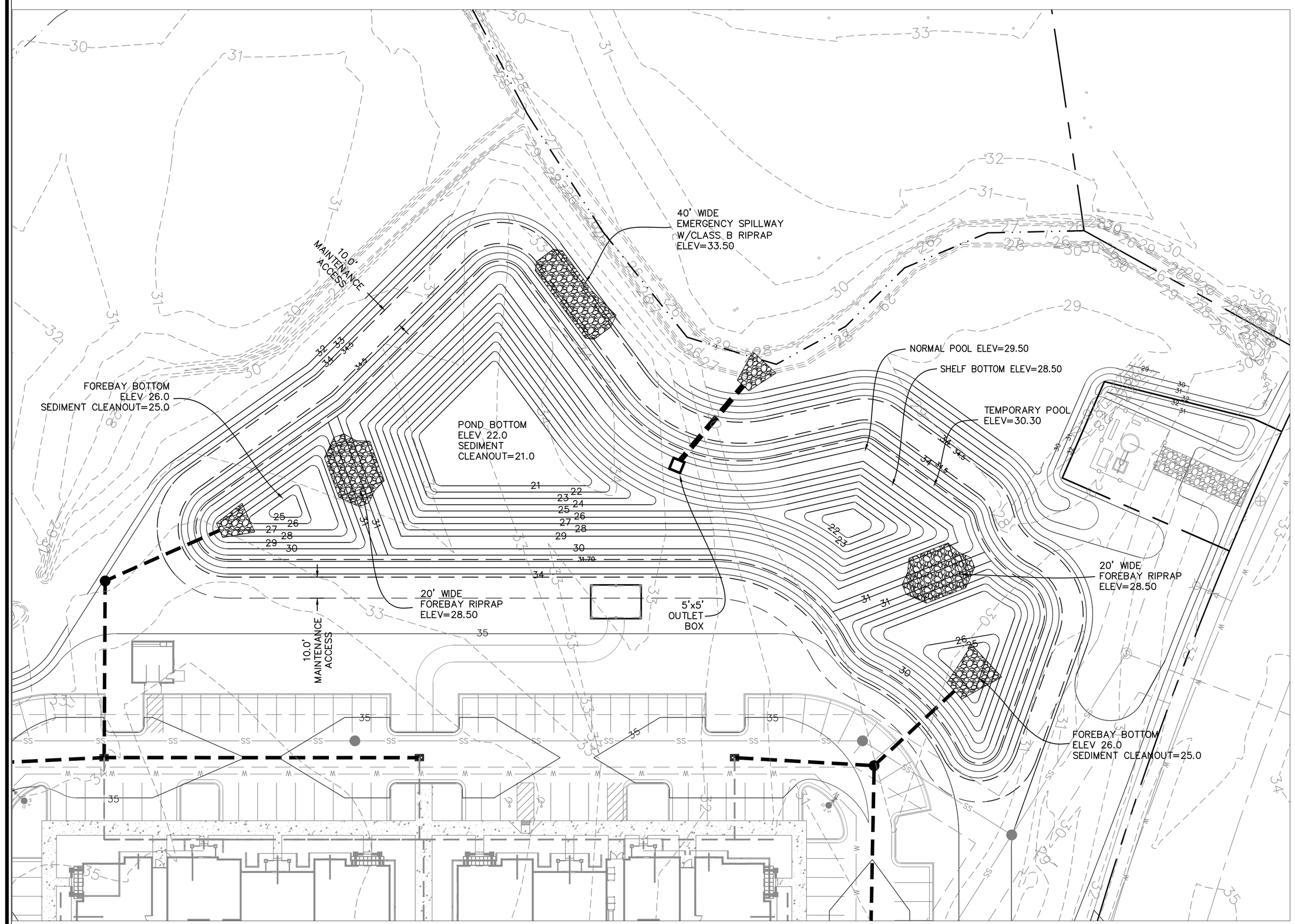

GRAPHIC SCALE
30 0 15 30 60
1 inch = 30 ft.

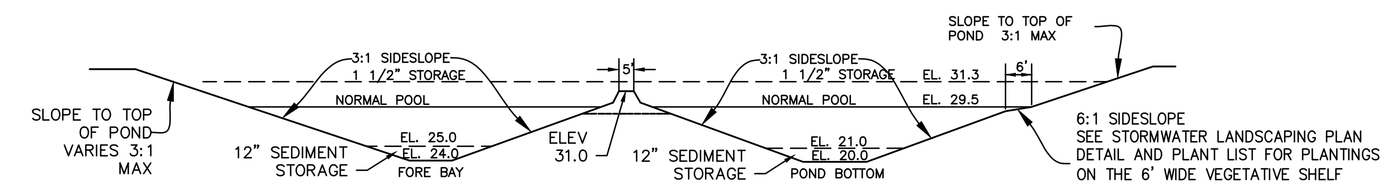

NORMAL POOL ELEVATION	SHELF BOTTOM ELEVATION	POND DEPTH (FT)	VOLUME SHELF (CF)	POND BOTTOM SHELF AREA (SF)	SURFACE AREA PROVIDED (SF)	SURFACE AREA REQUIRED (SF)	PERIMETER PERMANENT POOL (LF)	AVERAGE POND DEPTH (FT)
29.5	28.5	8.5	2,199	14,649	18,946	18,326	755	5.5

POND CROSS-SECTION
N.T.S.

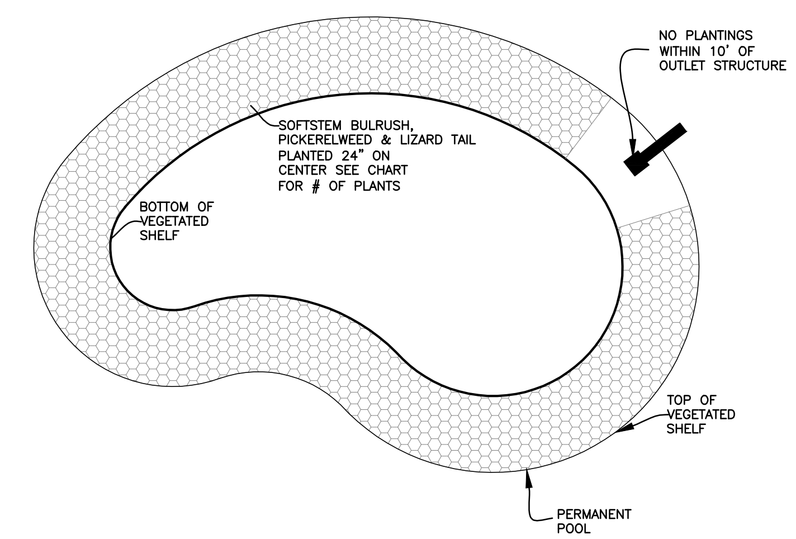

TYPICAL VEGETATED SHELF LANDSCAPING PLAN

SHALLOW WATER

VEGETATIVE SHELF = 2,673 S.F.
@ 1 PLANT PER 4 SF (24'' O.C.) =668 PLANTS

PLANT TYPE	QTY		BOTANICAL NAME	COMMON NAME	ROOT	CALIPER	HEIGHT	NOTES
HERBACEOUS	222		Schoenplectus tabernaemontani	Softstem Bulrush	CONT.	4" Pot		24" O.C.
	222		Pontedaria cordata	Pickerelweed	CONT.	4" Pot		24" O.C.
	223		Saururus cernuus	Lizard Tail	CONT.	4" Pot		24" O.C.

NOTES:

1. NO PLANTINGS WITHIN 10' OF OUTLET STRUCTURE.

2. BECAUSE MOST STORMWATER BASINS ARE EXCAVATED TO DEEP SUB-SOILS, THEY OFTEN LACK THE NUTRIENTS AND ORGANIC MATTER NEEDED TO SUPPORT VIGOROUS GROWTH OF PLANTS. ALL LANDSCAPE MATERIAL, INCLUDING GRASS, SHOULD BE PLANTED IN GOOD TOPSOIL. NATIVE UNDERLYING SOILS MAY BE SUITABLE FOR PLANTING IF AMENDED WITH 4 INCHES OF WELL-AGED COMPOST TILLED INTO THE SUBGRADE. COMPOST SHOULD MEET SPECIFICATIONS FOR GRADE A COMPOST QUALITY.

3. A MINIMUM TWO-YEAR WARRANTY PERIOD STIPULATING REQUIREMENTS FOR PLANT SURVIVAL/REPLACEMENT.

NORTH CAROLINA PROFESSIONAL SEAL 019742 ENGINEER MARK N. HARGROVE
5/4/2022

No.	Revision	Date	By

Designer MNH	Scale AS SHOWN
Drawn By MNH	Date MAY, 2022
Checked By MNH	Job No.

OAK GROVE @ BLAKE FARM
PENDER COUNTY NORTH CAROLINA

TRASK LAND COMPANY, INC.
1022 ASHES DRIVE, SUITE 201
WILMINGTON, NC 28405

PORT CITY CONSULTING ENGINEERS, PLLC
6216 STONEBRIDGE ROAD
WILMINGTON, NC 28409
910-599-1744 LICENSE No. P-1032

POND DETAIL

Sheet No.
C-8.0

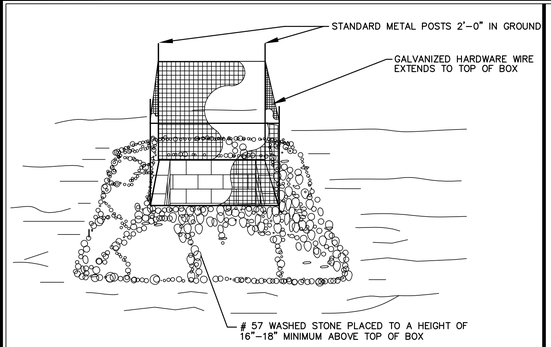

STANDARD CATCH BASIN/YARD INLET PROTECTION

N.T.S.

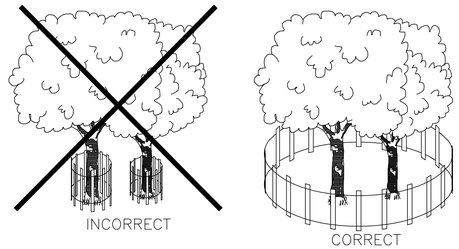

BARRIER SHOULD BE INSTALLED AT THE DRIP LINE OF TREE BRANCHES

NOTES:

IN SPITE OF PRECAUTIONS, SOME DAMAGE TO PROTECTED TREES MAY OCCUR. IN SUCH CASES REPAIR ANY DAMAGE TO THE CROWN, TRUCK OR ROOT SYSTEM IMMEDIATELY.

- FENCE SHALL BE PLACED 1.5 TIMES THE DIAMETER OF THE PLANT
- REPAIR ROOTS BY REMOVING THE DAMAGED AREAS WITH A CLEAN CUT.
- REPAIR DAMAGE TO BARK BY TRIMMING AROUND THE DAMAGED AREAS.
- CUT OFF ALL DAMAGED TREE LIMBS ABOVE THE TREE COLLAR AT THE TRUNK OR MAIN BRANCH.

EXAMPLE OF TREE PROTECTION FENCING

N.T.S.

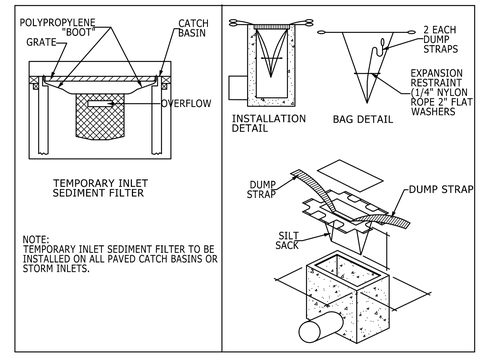

NOTE:
TEMPORARY INLET SEDIMENT FILTER TO BE INSTALLED ON ALL PAVED CATCH BASINS OR STORM INLETS.

SILT SACK DETAIL

NOT TO SCALE

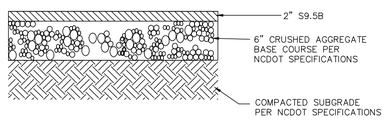

PAVEMENT DETAIL

N.T.S.

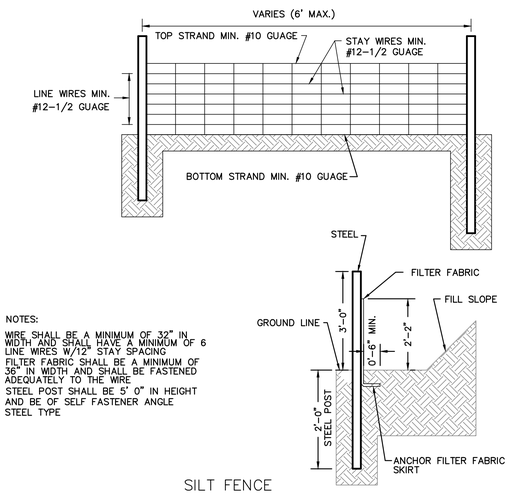

NOTES:

1. WIRE SHALL BE A MINIMUM OF 32" IN WIDTH AND SHALL HAVE A MINIMUM OF 6 LINE WIRES W/12" STAY SPACING
2. FILTER FABRIC SHALL BE A MINIMUM OF 36" IN WIDTH AND SHALL BE FASTENED ADEQUATELY TO THE WIRE
3. STEEL POST SHALL BE 5' 0" IN HEIGHT AND BE OF SELF FASTENER ANGLE STEEL TYPE

SILT FENCE

N.T.S.

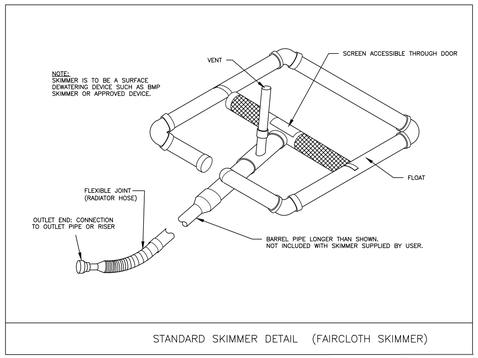

STANDARD SKIMMER DETAIL (FAIRCLOTH SKIMMER)

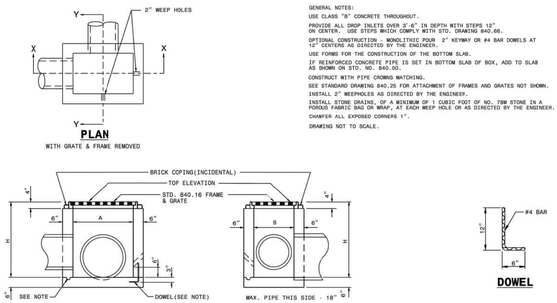

GENERAL NOTES:

USE CLASS "B" CONCRETE THROUGHOUT.

PROVIDE ALL DROP INLETS OVER 3'-6" IN DEPTH WITH STEPS 12" ON CENTER. USE STEPS WHICH COMPLY WITH STD. DRAWING 840.66.

OPTIONAL CONSTRUCTION - MONOLITHIC POUR 2" KEYWAY OR #4 BAR DOWELS AT 12" CENTERS AS DIRECTED BY THE ENGINEER.

USE FORMS FOR THE CONSTRUCTION OF THE BOTTOM SLAB.

IF REINFORCED CONCRETE PIPE IS SET IN BOTTOM SLAB OF BOX, ADD TO SLAB AS SHOWN ON STD. NO. 840.00.

CONSTRUCT WITH PIPE CROWNS MATCHING.

SEE STANDARD DRAWING 840.25 FOR ATTACHMENT OF FRAMES AND GRATES NOT SHOWN.

INSTALL 2" WEEPHOLES AS DIRECTED BY THE ENGINEER.

INSTALL STONE DRAINS, OF A MINIMUM OF 1 CUBIC FOOT OF NO. 78M STONE IN A POROUS FABRIC BAG OR WRAP, AT EACH WEEP HOLE OR AS DIRECTED BY THE ENGINEER.

CHAMFER ALL EXPOSED CORNERS 1".

DRAWING NOT TO SCALE.

DIMENSIONS AND QUANTITIES FOR DROP INLET(BASED ON MIN. HEIGHT, H)								
DIMENSIONS OF BOX & PIPE				CUBIC YARDS CONC. IN BOX			DEDUCTIONS FOR ONE PIPE	
PIPE	SPAN	WIDTH	MIN. HEIGHT					
D	A	B	H	BOTTOM SLAB	WALL PER FT. HT.	TOTAL WALL FOR MIN. HEIGHT	C.M.	R.C.
12"	3'-0"	2'-0"	2'-0"	0.222	0.222	0.592	0.015	0.026
15"	/	/	2'-3"			0.648	0.023	0.036
18"			2'-6"			0.703	0.033	0.049
24"			3'-0"			0.814	0.059	0.085
30"	3'-0"	2'-0"	3'-6"	0.222	0.222	0.925	0.092	0.127

NOTE: THE CONCRETE JUNCTION BOX IS AVAILABLE IN BRICK. SEE 840.32 BRICK JUNCTION BOX DETAIL IN THE NCDOT DIVISION OF HIGHWAY STANDARDS.

STATE OF NORTH CAROLINA DEPT. OF TRANSPORTATION DIVISION OF HIGHWAYS RALEIGH, N.C.

1-18

ROADWAY STANDARD DRAWING FOR
CONCRETE DROP INLET
12" THRU 30" PIPE

SHEET 1 OF 1
840.14

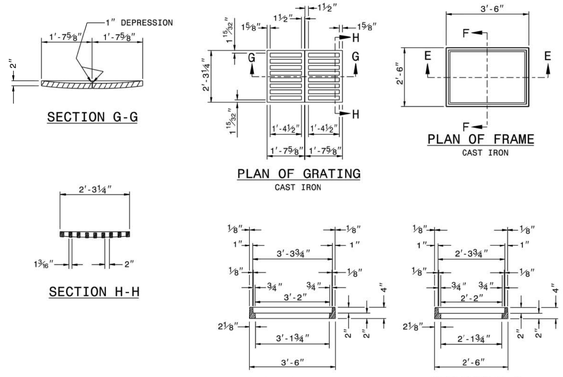

NOTE: USE TRAFFIC BEARING FRAME & GRATE IN TRAFFIC AREAS

STATE OF NORTH CAROLINA DEPT. OF TRANSPORTATION DIVISION OF HIGHWAYS RALEIGH, N.C.

1-18

ROADWAY STANDARD DRAWING FOR
DROP INLET FRAME AND GRATES
USE WITH STD. DWG.S 840.14 AND 840.15

SHEET 1 OF 1
840.16

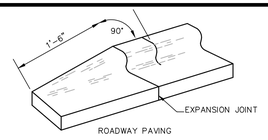

24" CURB & GUTTER TERMINATION DETAIL

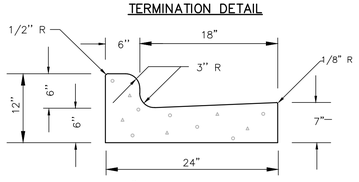

24" CURB AND GUTTER

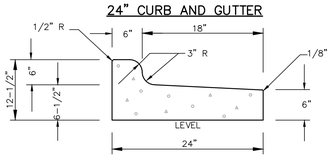

(TO BE USED WHEN PAVEMENT IS SLOPED AWAY FROM ISLAND 1/4' : 1'-0" SLOPE OR AS SHOWN ON PLANS)

24" CURB AND GUTTER (REVERSE SLOPE)

GENERAL NOTES:

CONSTRUCTION JOINTS SHALL BE SPACED AT MAX. 10' INTERVALS, EXCEPT THAT A 15 FOOT SPACING MAY BE USED WHEN A MACHINE IS USED OR WHEN SATISFACTORY SUPPORT FOR THE FACE FORM CAN BE OBTAINED WITHOUT THE USE OF TEMPLATES AT 10 FOOT INTERVALS. JOINT SPACING MAY BE ALTERED BY THE ENGINEER TO PREVENT UNCONTROLLED CRACKING. CONTRACTION JOINTS MAY BE INSTALLED BY THE USE OF TEMPLATES OR FORMED BY OTHER APPROVED METHODS. WHERE SUCH JOINTS ARE NOT FORMED BY TEMPLATES, A MINIMUM DEPTH OF 1-1/2" SHALL BE OBTAINED. ALL CONTRACTION JOINTS EXCEPT IN 8" X 6" MEDIAN CURB SHALL BE FILLED WITH JOINT SEALER. EXPANSION JOINTS SHALL BE SPACED AT 90' INTERVALS AND ADJACENT TO ALL RIGID OBJECTS.

CURB AND GUTTER

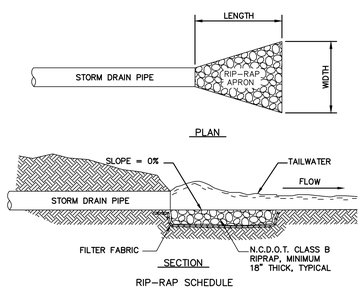

RIP-RAP SCHEDULE

(#)	PIPE DIA. (IN.)	LENGTH (FT.)	UPSTREAM WIDTH (FT.)	DOWNSTREAM WIDTH (FT.)
RRA-1	42	21	10.5	21
RRA-2	30	15	7.5	15
RRA-3	30	15	7.5	15

RIP-RAP APRON

N.T.S.

NORTH CAROLINA PROFESSIONAL SEAL 019742 ENGINEER MARK N. HARGROVE

5/4/2022

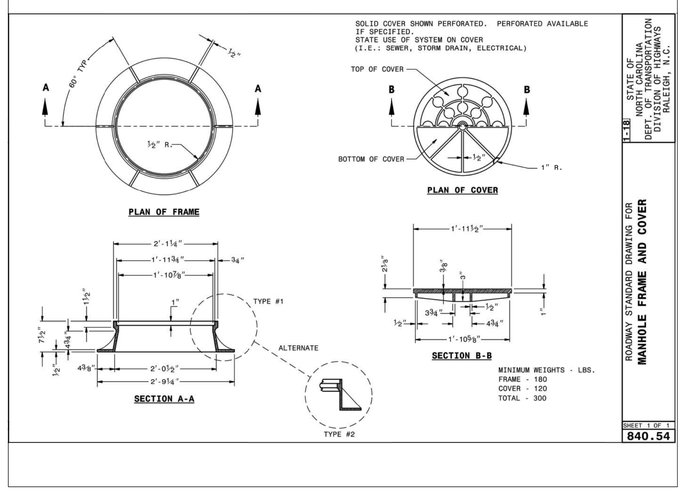

MINIMUM WEIGHTS - LBS.
FRAME - 180
COVER - 120
TOTAL - 300

STATE OF NORTH CAROLINA DEPT. OF TRANSPORTATION DIVISION OF HIGHWAYS RALEIGH, N.C.

1-18

ROADWAY STANDARD DRAWING FOR
MANHOLE FRAME AND COVER

SHEET 1 OF 1
840.54

GENERAL NOTES

USE 4000 PSI MINIMUM COMPRESSIVE STRENGTH CONCRETE.

USE ASTM A615 GRADE 60 REINFORCING STEEL. USE ASTM A1064 WELDED WIRE FABRIC (WWF).

FABRICATE, ASSEMBLE AND DESIGN PRECAST MANHOLE COMPONENTS ACCORDANCE WITH AASHTO M199.

ASSEMBLE RISER AND GRADE RINGS WITH THE STEPS SPACED 12" FROM THE TOP TO THE BOTTOM OF THE MANHOLE.

WHERE THE MANHOLE IS EXPOSED TO ROAD TRAFFIC, CONSTRUCT THE TOP OF THE MANHOLE FLUSH WITH THE GROUND AND A MINIMUM OF 9" ABOVE THE GROUND AT OTHER LOCATIONS.

LIMIT DEPTH OF FILL TO 30'-0" FROM FINISH GRADE TO TOP OF BOTTOM SLAB.

THE MIN. SLAB THICKNESS 'T' IS THE DIMENSION OF THE THINNEST PORTION OF THE TOP/BOTTOM SLAB.

* TOP MAT OF REINFORCEMENT MAY BE NEGLECTED IF TOP SLAB HAS A DISTINGUISHABLE TOP AND BOTTOM.

D	W	T	As
INTERNAL DIAMETER (FT.)	MIN. WALL THICKNESS (IN.)	MIN. TOP/BOTTOM SLAB THICKNESS (IN.)	MIN. CIRCUMFERENTIAL AREA OF STEEL PER VERTICAL FT. (SQ. IN.)
4	4	6	0.12
5	5	8	0.15
6	6	8	0.18

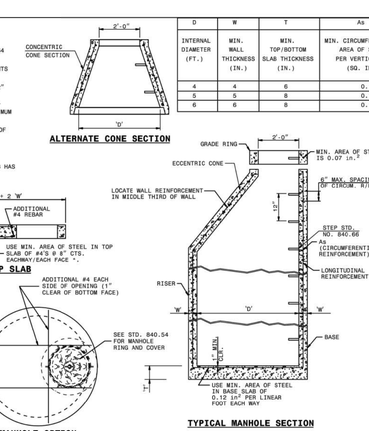

STATE OF NORTH CAROLINA DEPT. OF TRANSPORTATION DIVISION OF HIGHWAYS RALEIGH, N.C.

1-18

ROADWAY STANDARD DRAWING FOR
PRECAST MANHOLE 4', 5' AND 6' DIAMETER
12" THRU 48" PIPE

SHEET 1 OF 1
840.52

No.	Revision	Date	By

Designer	MNH	Scale	AS SHOWN
Drawn By	MNH	Date	MAY, 2022
Checked By	MNH	Job No.	

OAK GROVE @ BLAKE FARM

PENDER COUNTY NORTH CAROLINA

TRASK LAND COMPANY, INC.
1022 ASHES DRIVE, SUITE 201
WILMINGTON, NC 28405

PORT CITY CONSULTING ENGINEERS, PLLC
6216 STONEBRIDGE ROAD
WILMINGTON, NC 28409
910-599-1744 LICENSE No. P-1032

MISCELLANEOUS DETAILS

Sheet No.
C-8.1

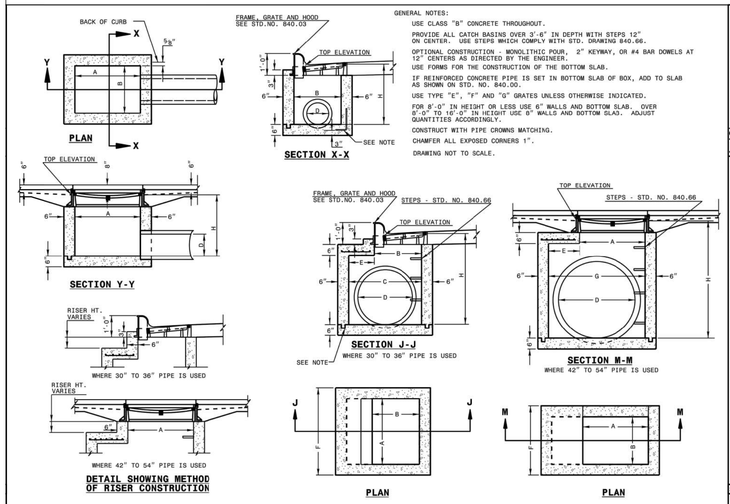

GENERAL NOTES:

USE CLASS "B" CONCRETE THROUGHOUT.

PROVIDE ALL CATCH BASINS OVER 3'-6" IN DEPTH WITH STEPS 12" ON CENTER. USE STEPS WHICH COMPLY WITH STD. DRAWING 840.66.

OPTIONAL CONSTRUCTION - MONOLITHIC POUR, 2" KEYWAY, OR #4 BAR DOWELS AT 12" CENTERS AS DIRECTED BY THE ENGINEER.

USE FORMS FOR THE CONSTRUCTION OF THE BOTTOM SLAB.

IF REINFORCED CONCRETE PIPE IS SET IN BOTTOM SLAB OF BOX, ADD TO SLAB AS SHOWN ON STD. NO. 840.00.

USE TYPE "E", "F" AND "G" GRATES UNLESS OTHERWISE INDICATED.

FOR 8'-0" IN HEIGHT OR LESS USE 6" WALLS AND BOTTOM SLAB. OVER 8'-0" TO 16'-0" IN HEIGHT USE 8" WALLS AND BOTTOM SLAB. ADJUST QUANTITIES ACCORDINGLY.

CONSTRUCT WITH PIPE CROWNS MATCHING.

CHAMFER ALL EXPOSED CORNERS 1".

DRAWING NOT TO SCALE.

STATE OF NORTH CAROLINA DEPT. OF TRANSPORTATION DIVISION OF HIGHWAYS RALEIGH, N.C.

1-18

ROADWAY STANDARD DRAWING FOR
CONCRETE CATCH BASIN
12" THRU 54" PIPE

SHEET 1 OF 2
840.02

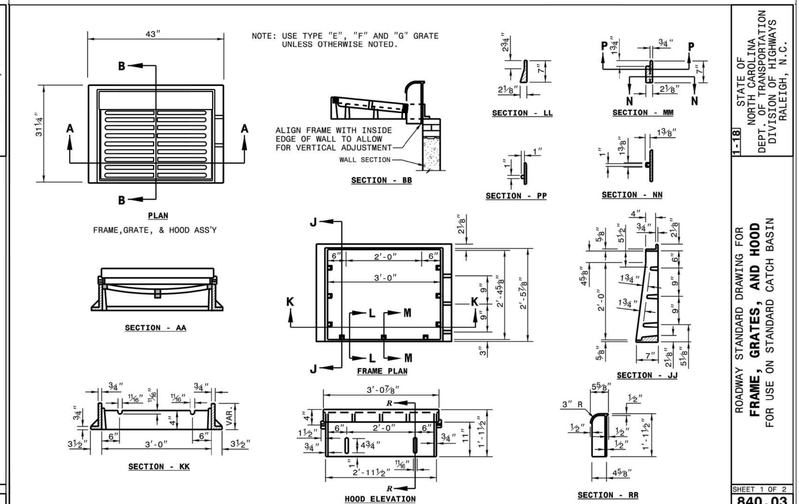

STATE OF NORTH CAROLINA DEPT. OF TRANSPORTATION DIVISION OF HIGHWAYS RALEIGH, N.C.

1-18

ROADWAY STANDARD DRAWING FOR
FRAME, GRATES, AND HOOD
FOR USE ON STANDARD CATCH BASIN

SHEET 1 OF 2
840.03

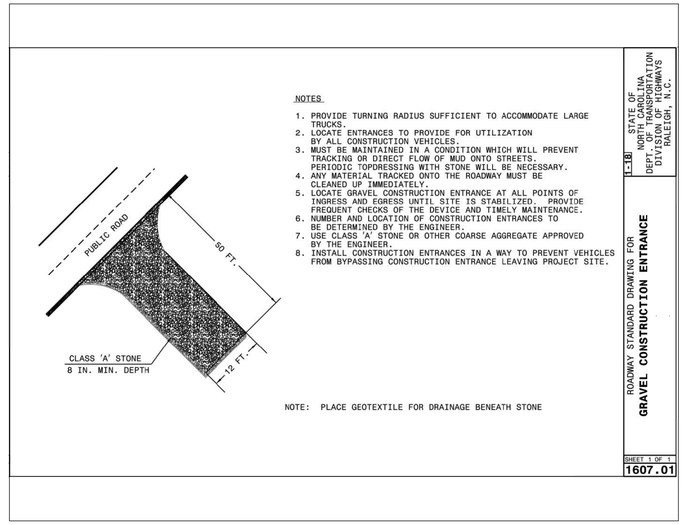

NOTES

1. PROVIDE TURNING RADIUS SUFFICIENT TO ACCOMMODATE LARGE TRUCKS.
2. LOCATE ENTRANCES TO PROVIDE FOR UTILIZATION BY ALL CONSTRUCTION VEHICLES.
3. MUST BE MAINTAINED IN A CONDITION WHICH WILL PREVENT TRACKING OR DIRECT FLOW OF MUD ONTO STREETS. PERIODIC TOPDRESSING WITH STONE WILL BE NECESSARY.
4. ANY MATERIAL TRACKED ONTO THE ROADWAY MUST BE CLEANED UP IMMEDIATELY.
5. LOCATE GRAVEL CONSTRUCTION ENTRANCE AT ALL POINTS OF INGRESS AND EGRESS UNTIL SITE IS STABILIZED. PROVIDE FREQUENT CHECKS OF THE DEVICE AND TIMELY MAINTENANCE.
6. NUMBER AND LOCATION OF CONSTRUCTION ENTRANCES TO BE DETERMINED BY THE ENGINEER.
7. USE CLASS 'A' STONE OR OTHER COARSE AGGREGATE APPROVED BY THE ENGINEER.
8. INSTALL CONSTRUCTION ENTRANCES IN A WAY TO PREVENT VEHICLES FROM BYPASSING CONSTRUCTION ENTRANCE LEAVING PROJECT SITE.

NOTE: PLACE GEOTEXTILE FOR DRAINAGE BENEATH STONE

STATE OF NORTH CAROLINA DEPT. NORTH CAROLINA DEPARTMENT OF TRANSPORTATION DIVISION OF HIGHWAYS RALEIGH, N.C.

1-18

ROADWAY STANDARD DRAWING FOR
GRAVEL CONSTRUCTION ENTRANCE

SHEET 1 OF 1
1607.01

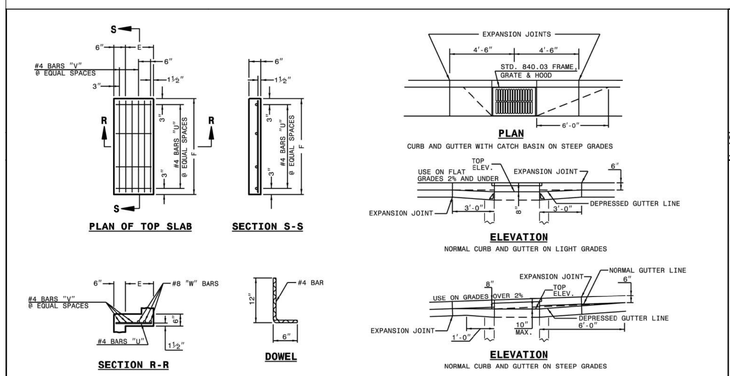

MINIMUM DIMENSIONS AND QUANTITIES FOR CONCRETE CATCH BASIN(BASED ON MIN. HEIGHT, H, WITH NO RISER) *

DIMENSIONS OF BOX AND PIPE						COVER DIMENSION		BARS-U		BARS-V		BARS-W		TOTAL LBS.	CU.YDS. CONC. IN BOX		DEDUCTIONS ONE PIPE	
PIPE	SPAN	WIDTH	WIDTH	SPAN	MIN. HEIGHT			NO.	LENGTH	NO.	LENGTH	NO.	LENGTH		TOP SLAB	BOTTOM SLAB	C.M.	R.C.
D	A	B	C	G	H	E	F									TOT CONC. FOR MINIMUM HEIGHT = H		
12"	3'-0"	2'-2"	--	--	2'-9"	--	--	--	--	--	--	--	--	--	--	0.235	0.015	0.026
15"	3'-0"	2'-2"			3'-0"											0.235	0.023	0.036
18"	3'-0"	2'-2"			3'-3"											0.235	0.033	0.049
24"	3'-0"	2'-2"			3'-9"											0.235	0.059	0.085
30"	3'-0"	2'-2"	3'-4"		4'-3"	1'-2"	4'-0"	4	1'-5"	2	3'-9"	3	3'-9"	39	0.123	0.321	0.092	0.127
36"	3'-0"	2'-2"	3'-10"		4'-9"	1'-8"	4'-0"	4	1'-11"	3	3'-9"	3	3'-9"	43	0.161	0.358	0.132	0.178
42"	3'-0"	2'-2"		4'-5"	5'-3"	1'-5"	3'-2"	4	1'-8"	2	2'-11"	3	2'-11"	32	0.112	0.318	0.180	0.243
48"	3'-0"	2'-2"		5'-0"	5'-9"	2'-0"	3'-2"	4	2'-3"	3	2'-11"	3	2'-11"	35	0.145	0.352	0.235	0.317
54"	3'-0"	2'-2"		5'-7"	6'-3"	2'-7"	3'-2"	4	2'-10"	5	2'-11"	3	2'-11"	41	0.180	0.386	0.297	0.401

* RISER HAS .228 CUBIC YARDS OF CONCRETE PER FOOT HEIGHT

STATE OF NORTH CAROLINA DEPT. OF TRANSPORTATION DIVISION OF HIGHWAYS RALEIGH, N.C.

1-18

ROADWAY STANDARD DRAWING FOR
CONCRETE CATCH BASIN
12" THRU 54" PIPE

SHEET 2 OF 2
840.02

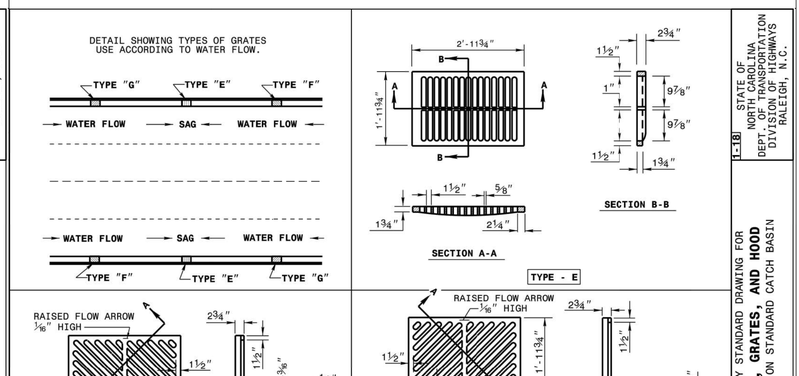

STATE OF NORTH CAROLINA DEPT. OF TRANSPORTATION DIVISION OF HIGHWAYS RALEIGH, N.C.

1-18

ROADWAY STANDARD DRAWING FOR
FRAME, GRATES, AND HOOD
FOR USE ON STANDARD CATCH BASIN

SHEET 2 OF 2
840.03

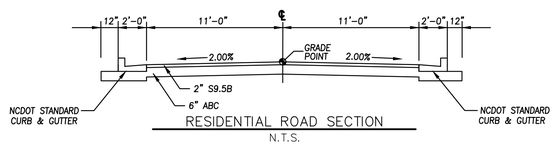

RESIDENTIAL ROAD SECTION

N.T.S.

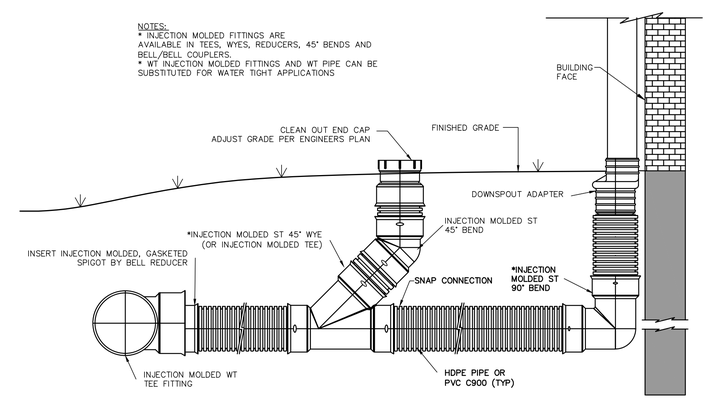

ROOF DRAIN DETAIL WITH CLEANOUT

N.T.S.

NORTH CAROLINA PROFESSIONAL SEAL 019742 ENGINEER MARK N. HAWGROVE

5/4/2022

No.	Revision	Date	By

Designer MNH	Scale AS SHOWN
Drawn By MNH	Date MAY, 2022
Checked By MNH	Job No.

OAK GROVE @ BLAKE FARM

PENDER COUNTY NORTH CAROLINA

TRASK LAND COMPANY, INC.
1022 ASHES DRIVE, SUITE 201
WILMINGTON, NC 28405

PORT CITY CONSULTING ENGINEERS, PLLC
6216 STONEBRIDGE ROAD
WILMINGTON, NC 28409
910-599-1744 LICENSE No. P-1032

MISCELLANEOUS DETAILS

Sheet No.
C-8.2

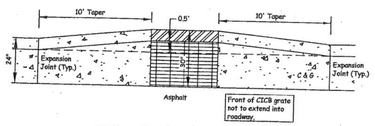

Offset Curb Inlet Catch Basin

Not to Scale

Notes:

1. Offset Curb to be in accordance with NC DOT Standards. (852.05)

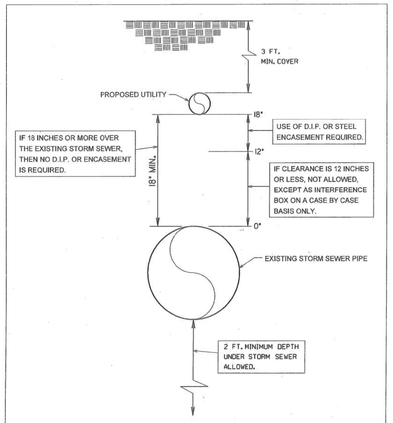

PROPOSED UTILITY OVER EXISTING STORM SEWER

NCDOT APPROVED 08/11/2004 — Not To Scale

8/17/99

THRUST BLOCKS ARE DESIGNED FOR 200 P.S.I. EVEN THOUGH THE TEST PRESSURE IS 150 PSI

HORIZONTAL RESTRAINT (ALL AREAS GIVEN ARE IN SQUARE FEET)

PIPE SIZE	DEGREE OF BEND	LBS. STATIC THRUST *	ALLOWABLE SOIL BEARING (PSF) 1000	2000	3000	4000	5000	6000	7000	8000
4"	11¼°	616	1	-	-	-	-	-	-	-
	22½°	1,233	1	1	-	-	-	-	-	-
	45°	2,465	2	1	-	-	-	-	-	-
	90°	4,930	4	2	1	-	-	-	-	-
	TEE/PLUG	4,930	4	2	1	-	-	-	-	-
6"	11¼°	1,383	2	1	-	-	-	-	-	-
	22½°	2,765	3	1	1	-	-	-	-	-
	45°	5,529	6	3	2	1	-	-	-	-
	90°	11,059	12	6	4	3	2	1	-	-
	TEE/PLUG	11,059	12	6	4	3	2	1	-	-
8"	11¼°	2,458	3	1	1	-	-	-	-	-
	22½°	4,916	5	3	2	1	-	-	-	-
	45°	9,832	10	5	3	2	2	1	-	-
	90°	19,663	21	11	7	5	4	3	2	1
	TEE/PLUG	19,663	21	11	7	5	4	3	2	1
10"	11¼°	3,838	4	2	1	-	-	-	-	-
	22½°	7,675	8	4	3	2	1	-	-	-
	45°	15,350	16	8	5	4	3	2	1	-
	90°	30,699	33	17	11	8	6	5	4	3
	TEE/PLUG	30,699	33	17	11	8	6	5	4	3
12"	11¼°	5,527	6	3	2	1	-	-	-	-
	22½°	11,053	12	6	4	3	2	1	-	-
	45°	22,097	23	12	8	6	4	3	2	1
	90°	44,197	47	24	15	11	8	6	5	4
	TEE/PLUG	44,197	47	24	15	11	8	6	5	4
14"	11¼°	7,454	8	4	3	2	2	1	-	-
	22½°	14,908	15	8	5	4	3	2	1	-
	45°	29,815	31	16	10	7	5	4	3	2
	90°	59,629	64	33	21	15	11	8	7	6
	TEE/PLUG	59,629	64	33	21	15	11	8	7	6
16"	11¼°	9,733	10	5	3	2	2	1	-	-
	22½°	19,467	20	10	7	5	4	3	2	1
	45°	38,931	41	21	14	10	7	6	5	4
	90°	77,860	83	42	28	20	15	12	10	8
	TEE/PLUG	77,860	83	42	28	20	15	12	10	8

* INCLUDES 1.25 SAFETY FACTOR

VERTICAL RESTRAINT (ALL VOLUMES GIVEN ARE IN CUBIC YARDS)**

PIPE SIZE	RESTRAINING RODS NO.REQ'D	DIA.	DEGREE OF BEND 11 1/4°	22 1/2°	45°
4"	2	1/2"	0.25	0.50	0.75
6"	2	1/2"	0.50	1.0	1.75
8"	2	5/8"	0.75	1.50	3.0
10"	2	3/4"	1.25	2.25	4.50
12"	2	7/8"	1.75	3.25	6.50
14"	4	5/8"	2.25	4.50	8.75
16"	4	3/4"	3.0	6.0	11.50

**INCLUDES 1.50 SAFETY FACTOR

GENERAL NOTES:
1. CONCRETE SHALL BE CLASS "B".
2. CONCRETE SHALL NOT CONTACT BOLTS ENDS OF MECHANICAL JOINT FITTINGS.
3. CONSULT WITH ENGINEER FOR CONCRETE REQUIREMENTS ON MAINS LARGER THAN 16 INCHES. (FOR VERTICAL & HORIZONTAL BENDS)
4. ALLOWABLE SOIL BEARING SHALL BE DETERMINED BY THE ENGINEER.

REVISIONS

NO.	DATE	DESCRIPTION

SHEET 2 OF 2

THRUST RESTRAINT FOR WATER MAINS

STATE OF NORTH CAROLINA
DIVISION OF HIGHWAYS
RALEIGH, N.C.

PROJECT REFERENCE NO.	SHEET NO.
DESIGNED BY:	
DRAWN BY:	
CHECKED BY:	
APPROVED BY:	
REVISED:	

NORTH CAROLINA DEPARTMENT OF TRANSPORTATION
DESIGN SERVICES UNIT
TELEPHONE: (919) 250-4128
FAX: (919) 250-4119

UTILITY CONSTRUCTION PLANS ONLY

UTILITY CONSTRUCTION

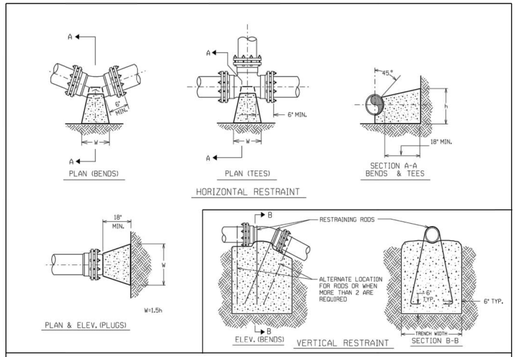

THRUST RESTRAINT FOR PIPE LINES

FLOWABLE FILL ENCASEMENT

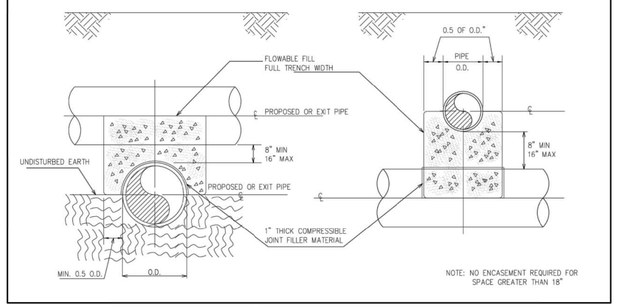

NOTE: NO ENCASEMENT REQUIRED FOR SPACE GREATER THAN 18"

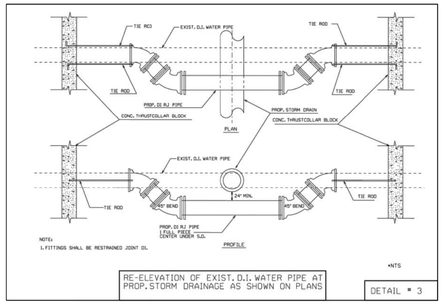

RE-ELEVATION OF EXIST. D.I. WATER PIPE AT PROP. STORM DRAINAGE AS SHOWN ON PLANS

DETAIL # 3

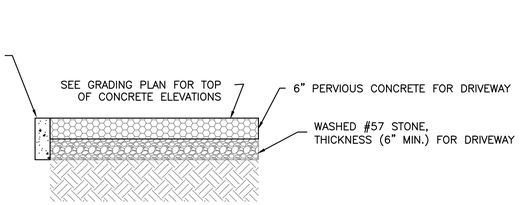

NOTE: CONTRACTOR & DEVELOPER SHALL CONSULT WITH & INSTALL PERVIOUS CONCRETE PER MANUFACTURER'S RECOMMENDATIONS/SPECIFICATIONS (INCLUDING CONCRETE & STONE THICKNESSES IF GREATER THAN SHOWN).

PERMEABLE PAVEMENT SYSTEM DETAIL FOR PARKING

N.T.S

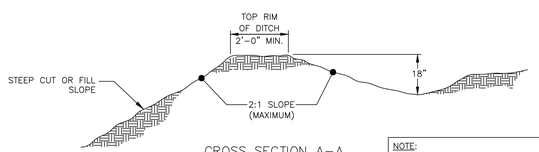

CROSS SECTION A–A

NOTE:
STABILIZE DIVERSION DITCH WITH TEMPORARY SEEDING AND EROSION CONTROL MATTING.

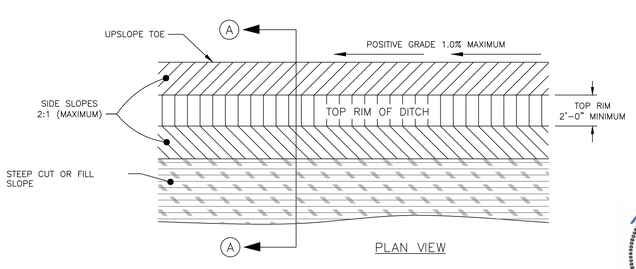

PLAN VIEW

TEMPORARY DIVERSION DITCH

NOT TO SCALE

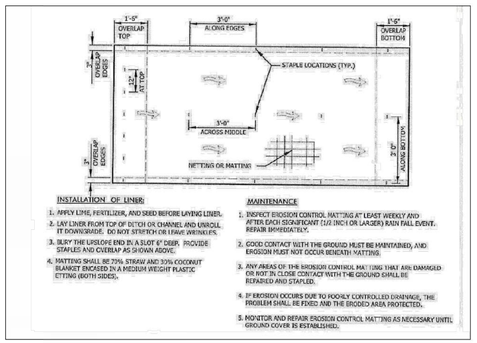

INSTALLATION OF LINER:

1. APPLY LIME, FERTILIZER, AND SEED BEFORE LAYING LINER.
2. LAY LINER FROM TOP OF DITCH OR CHANNEL AND UNROLL IT DOWNGRADE. DO NOT STRETCH OR LEAVE WRINKLES.
3. BURY THE UPSLOPE END IN A SLOT 6" DEEP. PROVIDE STAPLES AND OVERLAP AS SHOWN ABOVE.
4. MATTING SHALL BE 70% STRAW AND 30% COCONUT BLANKET ENCASED IN A MEDIUM WEIGHT PLASTIC NETTING (BOTH SIDES).

MAINTENANCE

1. INSPECT EROSION CONTROL MATTING AT LEAST WEEKLY AND AFTER EACH SIGNIFICANT (1/2 INCH OR LARGER) RAIN FALL EVENT. REPAIR IMMEDIATELY.
2. GOOD CONTACT WITH THE GROUND MUST BE MAINTAINED, AND EROSION MUST NOT OCCUR BENEATH MATTING.
3. ANY AREAS OF THE EROSION CONTROL MATTING THAT ARE DAMAGED OR NOT IN CLOSE CONTACT WITH THE GROUND SHALL BE REPAIRED AND STAPLED.
4. IF EROSION OCCURS DUE TO POORLY CONTROLLED DRAINAGE, THE PROBLEM SHALL BE FIXED AND THE ERODED AREA PROTECTED.
5. MONITOR AND REPAIR EROSION CONTROL MATTING AS NECESSARY UNTIL GROUND COVER IS ESTABLISHED.

TEMPORARY DITCH LINER

N.T.S.

NORTH CAROLINA PROFESSIONAL SEAL 019742 ENGINEER MARK N. HARGROVE
5/16/2022

RECOMMENDED MINIMUM TRENCH WIDTHS

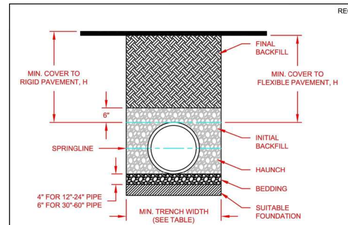

PIPE DIAM.	MIN. TRENCH WIDTH
4" (100mm)	21" (533mm)
6" (150mm)	23" (584mm)
8" (200mm)	26" (660mm)
10" (250mm)	28" (711mm)
12" (300mm)	30" (762mm)
15" (375mm)	34" (864mm)
18" (450mm)	39" (991mm)
24" (600mm)	48" (1219mm)
30" (750mm)	56" (1422mm)
36" (900mm)	64" (1626mm)
42" (1050mm)	72" (1829mm)
48" (1200mm)	80" (2032mm)
60" (1500mm)	96" (2438mm)

MINIMUM RECOMMENDED COVER BASED ON VEHICLE LOADING CONDITIONS*

PIPE DIAM.	SURFACE LIVE LOADING CONDITION H-25	HEAVY CONSTRUCTION (75T AXLE LAOD)*
12" - 48" (300mm - 1200mm)	12" (305mm)	48" (1219mm)
60" (1500mm)	24" (610mm)	60" (1524mm)

* VEHICLES IN EXCESS OF 75T MAY REQUIRE ADDITIONAL COVER
**SEE BACKFILL REQUIREMENTS IN NOTE 6.

MAXIMUM RECOMMENDED COVER BASED ON VECHICLE LOADING CONDITIONS

PIPE DIAM.	CLASS I COMPACTED	CLASS I DUMPED	CLASS II 95%	CLASS II 90%	CLASS III 95%
4" (100mm)	34 (10.4m)	16 (4.9m)	23 (7.0m)	16 (4.9m)	17 (5.2m)
6" (150mm)	40 (12.2m)	19 (5.8m)	27 (8.2m)	19 (5.8m)	20 (6.1m)
8" (200mm)	30 (9.1m)	14 (4.3m)	21 (6.4m)	14 (4.3m)	15 (4.6m)
10" (250mm)	34 (10.4m)	16 (4.9m)	23 (7.0m)	16 (4.9m)	17 (5.2m)
12" (300mm)	35 (10.7m)	17 (5.2m)	24 (7.3m)	17 (5.2m)	18 (5.5m)
15" (375mm)	37 (11.3m)	18 (5.5m)	25 (7.6m)	18 (5.5m)	19 (5.8m)
18" (450mm)	32 (9.8m)	15 (4.6m)	22 (6.7m)	15 (4.6m)	16 (4.9m)
24" (600mm)	27 (8.2m)	13 (4.0m)	19 (5.8m)	13 (4.0m)	14 (4.3m)
30" (750mm)	22 (6.7m)	11 (3.4m)	16 (4.9m)	11 (3.4m)	11 (3.4m)
36" (900mm)	26 (7.8m)	12 (3.7m)	18 (5.5m)	12 (3.7m)	13 (4.0m)
42" (1050mm)	24 (7.3m)	11 (3.4m)	17 (5.2m)	11 (3.4m)	12 (3.7m)
48" (1200mm)	23 (7.0m)	11 (3.4m)	16 (4.9m)	11 (3.4m)	12 (3.7m)
60" (1500mm)	26 (7.8m)	12 (3.7m)	18 (5.5m)	12 (3.7m)	13 (4.0m)

FILL HEIGHT TABLE GENERATED USING AASHTO SECTION 12, LOAD RESISTANCE FACTOR DESIGN (LRFD) PROCEDURE WITH THE FOLLOWING ASSUMPTIONS:
NO HYDROSTATIC PRESSURE,
UNIT WEIGHT OF SOIL (γs) = 120 PCF

NOTES:

1. ALL PIPE SYSTEMS SHALL BE INSTALLED IN ACCORDANCE WITH ASTM D2321, "STANDARD PRACTICE FOR UNDERGROUND INSTALLATION OF THERMOPLASTIC PIPE FOR SEWERS AND OTHER GRAVITY FLOW APPLICATIONS", LATEST ADDITION

2. MEASURES SHOULD BE TAKEN TO PREVENT MIGRATION OF NATIVE FINES INTO BACKFILL MATERIAL, WHEN REQUIRED.

3. FOUNDATION: WHERE THE TRENCH BOTTOM IS UNSTABLE, THE CONTRACTOR SHALL EXCAVATE TO A DEPTH REQUIRED BY THE ENGINEER AND REPLACE WITH SUITABLE MATERIAL AS SPECIFIED BY THE ENGINEER. AS AN ALTERNATIVE AND AT THE DISCRETION OF THE DESIGN ENGINEER, THE TRENCH BOTTOM MAY BE STABILIZED USING A GEOTEXTILE MATERIAL.

4. BEDDING: SUITABLE MATERIAL SHALL BE CLASS I, II OR III. THE CONTRACTOR SHALL PROVIDE DOCUMENTATION FOR MATERIAL SPECIFICATION TO ENGINEER. UNLESS OTHERWISE NOTED BY THE ENGINEER, MINIMUM BEDDING THICKNESS SHALL BE 4" (100mm) FOR 4"-24" (100mm-600mm); 6" (150mm) FOR 30"-60" (750mm-1500mm).

5. INITIAL BACKFILL: SUITABLE MATERIAL SHALL BE CLASS I, II OR III IN THE PIPE ZONE EXTENDING NOT LESS THAN 6" ABOVE CROWN OF PIPE. THE CONTRACTOR SHALL PROVIDE DOCUMENTATION FOR MATERIAL SPECIFICATION TO ENGINEER. MATERIAL SHALL BE INSTALLED AS REQUIRED IN ASTM D2321, LATEST EDITION.

6. MINIMUM COVER: MINIMUM COVER, H, IN NON-TRAFFIC APPLICATIONS (GRASS OR LANDSCAPE AREAS) IS 12" FROM THE TOP OF PIPE TO GROUND SURFACE. ADDITIONAL COVER MAY BE REQUIRED TO PREVENT FLOTATION. FOR TRAFFIC APPLICATIONS, MINIMUM COVER, H, IS 12" UP TO 48" DIAMETER PIPE AND 24" OF COVER FOR 60" DIAMETER PIPE, MEASURED FROM TOP OF PIPE TO BOTTOM OF FLEXIBLE PAVEMENT OR TO TOP OF RIGID PAVEMENT. FOR TRAFFIC APPLICATIONS WITH LESS THAN FOUR FEET OF COVER, EMBEDMENT OF THE PIPE SHALL BE USING ONLY A CLASS I OR CLASS II BACKFILL.

© 2016 ADS, INC.

ADVANCED DRAINAGE SYSTEMS, INC. ("ADS") HAS PREPARED THIS DETAIL BASED ON INFORMATION PROVIDED TO ADS. THIS DRAWING IS INTENDED TO DEPICT THE COMPONENTS AS REQUESTED. ADS HAS NOT PERFORMED ANY ENGINEERING OR DESIGN SERVICES FOR THIS PROJECT, NOR HAS ADS INDEPENDENTLY VERIFIED THE INFORMATION SUPPLIED. THE INSTALLATION DETAILS PROVIDED HEREIN ARE GENERAL RECOMMENDATIONS AND ARE NOT SPECIFIC FOR THIS PROJECT. THE DESIGN ENGINEER SHALL REVIEW THESE DETAILS PRIOR TO CONSTRUCTION. IT IS THE DESIGN ENGINEERS RESPONSIBILITY TO ENSURE THE DETAILS PROVIDED HEREIN MEETS OR EXCEEDS THE APPLICABLE NATIONAL, STATE, OR LOCAL REQUIREMENTS AND TO ENSURE THAT THE DETAILS PROVIDED HEREIN ARE ACCEPTABLE FOR THIS PROJECT.

REV.	DESCRIPTION	BY	MM/DD/YY	CHKD
4	ADDED CLASS 3 MAX COVER COLUMN	RJS	01/27/17	

TRENCH INSTALLATION DETAIL (ASTM F2648)

DRAWING NUMBER: STD-101A

ADS — ADVANCED DRAINAGE SYSTEMS, INC. — 4640 TRUEMAN BLVD HILLIARD, OHIO 43026

DR.	B.E.
DATE	8/15/13
SCALE	NTS
SHEET	1 OF 1

HDPE PIPE INSTALLATION DETAIL

N.T.S.

No.	Revision	Date	By
1	REVISED PER NC LAND QUALITY COMMENTS	5/16/22	MNH

Designer: MNH	Scale: AS SHOWN
Drawn By: MNH	Date: MAY, 2022
Checked By: MNH	Job No.

OAK GROVE @ BLAKE FARM

PENDER COUNTY — NORTH CAROLINA

TRASK LAND COMPANY, INC.
1022 ASHES DRIVE, SUITE 201
WILMINGTON, NC 28405

PORT CITY CONSULTING ENGINEERS, PLLC
6216 STONEBRIDGE ROAD
WILMINGTON, NC 28409
910-599-1744 LICENSE No. P-1032

MISCELLANEOUS DETAILS

Sheet No. C-8.3

GROUND STABILIZATION AND MATERIALS HANDLING PRACTICES FOR COMPLIANCE WITH THE NCG01 CONSTRUCTION GENERAL PERMIT

Implementing the details and specifications on this plan sheet will result in the construction activity being considered compliant with the Ground Stabilization and Materials Handling sections of the NCG01 Construction General Permit (Sections E and F, respectively). The permittee shall comply with the Erosion and Sediment Control plan approved by the delegated authority having jurisdiction. All details and specifications shown on this sheet may not apply depending on site conditions and the delegated authority having jurisdiction.

SECTION E: GROUND STABILIZATION

Required Ground Stabilization Timeframes

Site Area Description	Stabilize within this many calendar days after ceasing land disturbance	Timeframe variations
(a) Perimeter dikes, swales, ditches, and perimeter slopes	7	None
(b) High Quality Water (HQW) Zones	7	None
(c) Slopes steeper than 3:1	7	If slopes are 10' or less in length and are not steeper than 2:1, 14 days are allowed
(d) Slopes 3:1 to 4:1	14	-7 days for slopes greater than 50' in length and with slopes steeper than 4:1 -7 days for perimeter dikes, swales, ditches, perimeter slopes and HQW Zones -10 days for Falls Lake Watershed
(e) Areas with slopes flatter than 4:1	14	-7 days for perimeter dikes, swales, ditches, perimeter slopes and HQW Zones -10 days for Falls Lake Watershed unless there is zero slope

Note: After the permanent cessation of construction activities, any areas with temporary ground stabilization shall be converted to permanent ground stabilization as soon as practicable but in no case longer than 90 calendar days after the last land disturbing activity. Temporary ground stabilization shall be maintained in a manner to render the surface stable against accelerated erosion until permanent ground stabilization is achieved.

GROUND STABILIZATION SPECIFICATION

Stabilize the ground sufficiently so that rain will not dislodge the soil. Use one of the techniques in the table below:

Temporary Stabilization	Permanent Stabilization
• Temporary grass seed covered with straw or other mulches and tackifiers • Hydroseeding • Rolled erosion control products with or without temporary grass seed • Appropriately applied straw or other mulch • Plastic sheeting	• Permanent grass seed covered with straw or other mulches and tackifiers • Geotextile fabrics such as permanent soil reinforcement matting • Hydroseeding • Shrubs or other permanent plantings covered with mulch • Uniform and evenly distributed ground cover sufficient to restrain erosion • Structural methods such as concrete, asphalt or retaining walls • Rolled erosion control products with grass seed

POLYACRYLAMIDES (PAMS) AND FLOCCULANTS

1. Select flocculants that are appropriate for the soils being exposed during construction, selecting from the *NC DWR List of Approved PAMS/Flocculants*.
2. Apply flocculants at or before the inlets to Erosion and Sediment Control Measures.
3. Apply flocculants at the concentrations specified in the *NC DWR List of Approved PAMS/Flocculants* and in accordance with the manufacturer's instructions.
4. Provide ponding area for containment of treated Stormwater before discharging offsite.
5. Store flocculants in leak-proof containers that are kept under storm-resistant cover or surrounded by secondary containment structures.

EQUIPMENT AND VEHICLE MAINTENANCE

1. Maintain vehicles and equipment to prevent discharge of fluids.
2. Provide drip pans under any stored equipment.
3. Identify leaks and repair as soon as feasible, or remove leaking equipment from the project.
4. Collect all spent fluids, store in separate containers and properly dispose as hazardous waste (recycle when possible).
5. Remove leaking vehicles and construction equipment from service until the problem has been corrected.
6. Bring used fuels, lubricants, coolants, hydraulic fluids and other petroleum products to a recycling or disposal center that handles these materials.

LITTER, BUILDING MATERIAL AND LAND CLEARING WASTE

1. Never bury or burn waste. Place litter and debris in approved waste containers.
2. Provide a sufficient number and size of waste containers (e.g dumpster, trash receptacle) on site to contain construction and domestic wastes.
3. Locate waste containers at least 50 feet away from storm drain inlets and surface waters unless no other alternatives are reasonably available.
4. Locate waste containers on areas that do not receive substantial amounts of runoff from upland areas and does not drain directly to a storm drain, stream or wetland.
5. Cover waste containers at the end of each workday and before storm events or provide secondary containment. Repair or replace damaged waste containers.
6. Anchor all lightweight items in waste containers during times of high winds.
7. Empty waste containers as needed to prevent overflow. Clean up immediately if containers overflow.
8. Dispose waste off-site at an approved disposal facility.
9. On business days, clean up and dispose of waste in designated waste containers.

PAINT AND OTHER LIQUID WASTE

1. Do not dump paint and other liquid waste into storm drains, streams or wetlands.
2. Locate paint washouts at least 50 feet away from storm drain inlets and surface waters unless no other alternatives are reasonably available.
3. Contain liquid wastes in a controlled area.
4. Containment must be labeled, sized and placed appropriately for the needs of site.
5. Prevent the discharge of soaps, solvents, detergents and other liquid wastes from construction sites.

PORTABLE TOILETS

1. Install portable toilets on level ground, at least 50 feet away from storm drains, streams or wetlands unless there is no alternative reasonably available. If 50 foot offset is not attainable, provide relocation of portable toilet behind silt fence or place on a gravel pad and surround with sand bags.
2. Provide staking or anchoring of portable toilets during periods of high winds or in high foot traffic areas.
3. Monitor portable toilets for leaking and properly dispose of any leaked material. Utilize a licensed sanitary waste hauler to remove leaking portable toilets and replace with properly operating unit.

EARTHEN STOCKPILE MANAGEMENT

1. Show stockpile locations on plans. Locate earthen-material stockpile areas at least 50 feet away from storm drain inlets, sediment basins, perimeter sediment controls and surface waters unless it can be shown no other alternatives are reasonably available.
2. Protect stockpile with silt fence installed along toe of slope with a minimum offset of five feet from the toe of stockpile.
3. Provide stable stone access point when feasible.
4. Stabilize stockpile within the timeframes provided on this sheet and in accordance with the approved plan and any additional requirements. Soil stabilization is defined as vegetative, physical or chemical coverage techniques that will restrain accelerated erosion on disturbed soils for temporary or permanent control needs.

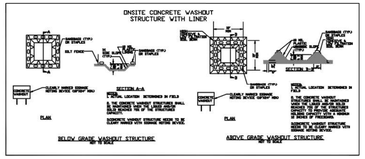

CONCRETE WASHOUTS

1. Do not discharge concrete or cement slurry from the site.
2. Dispose of, or recycle settled, hardened concrete residue in accordance with local and state solid waste regulations and at an approved facility.
3. Manage washout from mortar mixers in accordance with the above item and in addition place the mixer and associated materials on impervious barrier and within lot perimeter silt fence.
4. Install temporary concrete washouts per local requirements, where applicable. If an alternate method or product is to be used, contact your approval authority for review and approval. If local standard details are not available, use one of the two types of temporary concrete washouts provided on this detail.
5. Do not use concrete washouts for dewatering or storing defective curb or sidewalk sections. Stormwater accumulated within the washout may not be pumped into or discharged to the storm drain system or receiving surface waters. Liquid waste must be pumped out and removed from project.
6. Locate washouts at least 50 feet from storm drain inlets and surface waters unless it can be shown that no other alternatives are reasonably available. At a minimum, install protection of storm drain inlet(s) closest to the washout which could receive spills or overflow.
7. Locate washouts in an easily accessible area, on level ground and install a stone entrance pad in front of the washout. Additional controls may be required by the approving authority.
8. Install at least one sign directing concrete trucks to the washout within the project limits. Post signage on the washout itself to identify this location.
9. Remove leavings from the washout when at approximately 75% capacity to limit overflow events. Replace the tarp, sand bags or other temporary structural components when no longer functional. When utilizing alternative or proprietary products, follow manufacturer's instructions.
10. At the completion of the concrete work, remove remaining leavings and dispose of in an approved disposal facility. Fill pit, if applicable, and stabilize any disturbance caused by removal of washout.

HERBICIDES, PESTICIDES AND RODENTICIDES

1. Store and apply herbicides, pesticides and rodenticides in accordance with label restrictions.
2. Store herbicides, pesticides and rodenticides in their original containers with the label, which lists directions for use, ingredients and first aid steps in case of accidental poisoning.
3. Do not store herbicides, pesticides and rodenticides in areas where flooding is possible or where they may spill or leak into wells, stormwater drains, ground water or surface water. If a spill occurs, clean area immediately.
4. Do not stockpile these materials onsite.

HAZARDOUS AND TOXIC WASTE

1. Create designated hazardous waste collection areas on-site.
2. Place hazardous waste containers under cover or in secondary containment.
3. Do not store hazardous chemicals, drums or bagged materials directly on the ground.

NORTH CAROLINA Environmental Quality

NCG01 GROUND STABILIZATION AND MATERIALS HANDLING

EFFECTIVE: 04/01/19

PART III
SELF-INSPECTION, RECORDKEEPING AND REPORTING

SECTION A: SELF-INSPECTION

Self-inspections are required during normal business hours in accordance with the table below. When adverse weather or site conditions would cause the safety of the inspection personnel to be in jeopardy, the inspection may be delayed until the next business day on which it is safe to perform the inspection. In addition, when a storm event of equal to or greater than 1.0 inch occurs outside of normal business hours, the self-inspection shall be performed upon the commencement of the next business day. Any time when inspections were delayed shall be noted in the Inspection Record.

Inspect	Frequency (during normal business hours)	Inspection records must include:
(1) Rain gauge maintained in good working order	Daily	Daily rainfall amounts. If no daily rain gauge observations are made during weekend or holiday periods, and no individual day rainfall information is available, record the cumulative rain measurement for those unattended days (and this will determine if a site inspection is needed). Days on which no rainfall occurred shall be recorded as "zero." The permittee may use another rain-monitoring device approved by the Division.
(2) E&SC Measures	At least once per 7 calendar days and within 24 hours of a rain event ≥ 1.0 inch in 24 hours	1. Identification of the measures inspected, 2. Date and time of the inspection, 3. Name of the person performing the inspection, 4. Indication of whether the measures were operating properly, 5. Description of maintenance needs for the measure, 6. Description, evidence, and date of corrective actions taken.
(3) Stormwater discharge outfalls (SDOs)	At least once per 7 calendar days and within 24 hours of a rain event ≥ 1.0 inch in 24 hours	1. Identification of the discharge outfalls inspected, 2. Date and time of the inspection, 3. Name of the person performing the inspection, 4. Evidence of indicators of stormwater pollution such as oil sheen, floating or suspended solids or discoloration, 5. Indication of visible sediment leaving the site, 6. Description, evidence, and date of corrective actions taken.
(4) Perimeter of site	At least once per 7 calendar days and within 24 hours of a rain event ≥ 1.0 inch in 24 hours	If visible sedimentation is found outside site limits, then a record of the following shall be made: 1. Actions taken to clean up or stabilize the sediment that has left the site limits, 2. Description, evidence, and date of corrective actions taken, and 3. An explanation as to the actions taken to control future releases.
(5) Streams or wetlands onsite or offsite (where accessible)	At least once per 7 calendar days and within 24 hours of a rain event ≥ 1.0 inch in 24 hours	If the stream or wetland has increased visible sedimentation or a stream has visible increased turbidity from the construction activity, then a record of the following shall be made: 1. Description, evidence and date of corrective actions taken, and 2. Records of the required reports to the appropriate Division Regional Office per Part III, Section C, Item (2)(a) of this permit.
(6) Ground stabilization measures	After each phase of grading	1. The phase of grading (installation of perimeter E&SC measures, clearing and grubbing, installation of storm drainage facilities, completion of all land-disturbing activity, construction or redevelopment, permanent ground cover). 2. Documentation that the required ground stabilization measures have been provided within the required timeframe or an assurance that they will be provided as soon as possible.

NOTE: The rain inspection resets the required 7 calendar day inspection requirement.

PART III
SELF-INSPECTION, RECORDKEEPING AND REPORTING

SECTION B: RECORDKEEPING

1. E&SC Plan Documentation

The approved E&SC plan as well as any approved deviation shall be kept on the site. The approved E&SC plan must be kept up-to-date throughout the coverage under this permit. The following items pertaining to the E&SC plan shall be kept on site and available for inspection at all times during normal business hours.

Item to Document	Documentation Requirements
(a) Each E&SC measure has been installed and does not significantly deviate from the locations, dimensions and relative elevations shown on the approved E&SC plan.	Initial and date each E&SC measure on a copy of the approved E&SC plan or complete, date and sign an inspection report that lists each E&SC measure shown on the approved E&SC plan. This documentation is required upon the initial installation of the E&SC measures or if the E&SC measures are modified after initial installation.
(b) A phase of grading has been completed.	Initial and date a copy of the approved E&SC plan or complete, date and sign an inspection report to indicate completion of the construction phase.
(c) Ground cover is located and installed in accordance with the approved E&SC plan.	Initial and date a copy of the approved E&SC plan or complete, date and sign an inspection report to indicate compliance with approved ground cover specifications.
(d) The maintenance and repair requirements for all E&SC measures have been performed.	Complete, date and sign an inspection report.
(e) Corrective actions have been taken to E&SC measures.	Initial and date a copy of the approved E&SC plan or complete, date and sign an inspection report to indicate the completion of the corrective action.

2. Additional Documentation to be Kept on Site

In addition to the E&SC plan documents above, the following items shall be kept on the site and available for inspectors at all times during normal business hours, unless the Division provides a site-specific exemption based on unique site conditions that make this requirement not practical:

(a) This General Permit as well as the Certificate of Coverage, after it is received.

(b) Records of inspections made during the previous twelve months. The permittee shall record the required observations on the Inspection Record Form provided by the Division or a similar inspection form that includes all the required elements. Use of electronically-available records in lieu of the required paper copies will be allowed if shown to provide equal access and utility as the hard-copy records.

3. Documentation to be Retained for Three Years

All data used to complete the e-NOI and all inspection records shall be maintained for a period of three years after project completion and made available upon request. [40 CFR 122.41]

PART III
SELF-INSPECTION, RECORDKEEPING AND REPORTING

SECTION C: REPORTING

1. Occurrences that Must be Reported

Permittees shall report the following occurrences:

(a) Visible sediment deposition in a stream or wetland.

(b) Oil spills if:
- They are 25 gallons or more,
- They are less than 25 gallons but cannot be cleaned up within 24 hours,
- They cause sheen on surface waters (regardless of volume), or
- They are within 100 feet of surface waters (regardless of volume).

(c) Releases of hazardous substances in excess of reportable quantities under Section 311 of the Clean Water Act (Ref: 40 CFR 110.3 and 40 CFR 117.3) or Section 102 of CERCLA (Ref: 40 CFR 302.4) or G.S. 143-215.85.

(d) Anticipated bypasses and unanticipated bypasses.

(e) Noncompliance with the conditions of this permit that may endanger health or the environment.

2. Reporting Timeframes and Other Requirements

After a permittee becomes aware of an occurrence that must be reported, he shall contact the appropriate Division regional office within the timeframes and in accordance with the other requirements listed below. Occurrences outside normal business hours may also be reported to the Department's Environmental Emergency Center personnel at (800) 858-0368.

Occurrence	Reporting Timeframes [After Discovery] and Other Requirements
(a) Visible sediment deposition in a stream or wetland	• ***Within 24 hours***, an oral or electronic notification. • ***Within 7 calendar days***, a report that contains a description of the sediment and actions taken to address the cause of the deposition. Division staff may waive the requirement for a written report on a case-by-case basis. • If the stream is named on the NC 303(d) list as impaired for sediment-related causes, the permittee may be required to perform additional monitoring, inspections or apply more stringent practices if staff determine that additional requirements are needed to assure compliance with the federal or state impaired-waters conditions.
(b) Oil spills and release of hazardous substances per Item 1(b)-(c) above	• ***Within 24 hours***, an oral or electronic notification. The notification shall include information about: the date, time, nature, volume and location of the spill or release.
(c) Anticipated bypasses [40 CFR 122.41(m)(3)]	• ***A report at least ten days before the date of the bypass, if possible***. The report shall include an evaluation of the anticipated quality and effect of the bypass.
(d) Unanticipated bypasses [40 CFR 122.41(m)(3)]	• ***Within 24 hours***, an oral or electronic notification. • ***Within 7 calendar days***, a report that includes an evaluation of the quality and effect of the bypass.
(e) Noncompliance with the conditions of this permit that may endanger health or the environment [40 CFR 122.41(l)(7)]	• ***Within 24 hours***, an oral or electronic notification. • ***Within 7 calendar days***, a report that contains a description of the noncompliance, and its causes; the period of noncompliance, including exact dates and times, and if the noncompliance has not been corrected, the anticipated time noncompliance is expected to continue; and steps taken or planned to reduce, eliminate, and prevent reoccurrence of the noncompliance. [40 CFR 122.41(l)(6).
	• Division staff may waive the requirement for a written report on a case-by-case basis.

PART II, SECTION G, ITEM (4)
DRAW DOWN OF SEDIMENT BASINS FOR MAINTENANCE OR CLOSE OUT

Sediment basins and traps that receive runoff from drainage areas of one acre or more shall use outlet structures that withdraw water from the surface when these devices need to be drawn down for maintenance or close out unless this is infeasible. The circumstances in which it is not feasible to withdraw water from the surface shall be rare (for example, times with extended cold weather). Non-surface withdrawals from sediment basins shall be allowed only when all of the following criteria have been met:

(a) The E&SC plan authority has been provided with documentation of the non-surface withdrawal and the specific time periods or conditions in which it will occur. The non-surface withdrawal shall not commence until the E&SC plan authority has approved these items,
(b) The non-surface withdrawal has been reported as an anticipated bypass in accordance with Part III, Section C, Item (2)(c) and (d) of this permit,
(c) Dewatering discharges are treated with controls to minimize discharges of pollutants from stormwater that is removed from the sediment basin. Examples of appropriate controls include properly sited, designed and maintained dewatering tanks, weir tanks, and filtration systems,
(d) Vegetated, upland areas of the sites or a properly designed stone pad is used to the extent feasible at the outlet of the dewatering treatment devices described in Item (c) above,
(e) Velocity dissipation devices such as check dams, sediment traps, and riprap are provided at the discharge points of all dewatering devices, and
(f) Sediment removed from the dewatering treatment devices described in Item (c) above is disposed of in a manner that does not cause deposition of sediment into waters of the United States.

NORTH CAROLINA Environmental Quality

NCG01 SELF-INSPECTION, RECORDKEEPING AND REPORTING

EFFECTIVE: 04/01/19

NORTH CAROLINA PROFESSIONAL SEAL 019742 ENGINEER MARK N. HARGROVE
5/4/2022

No.	Revision	Date	By

Designer MNH	Scale AS SHOWN
Drawn By MNH	Date MAY, 2022
Checked By MNH	Job No.

OAK GROVE @ BLAKE FARM
PENDER COUNTY NORTH CAROLINA

TRASK LAND COMPANY, INC.
1022 ASHES DRIVE, SUITE 201
WILMINGTON, NC 28405

PORT CITY CONSULTING ENGINEERS, PLLC
6216 STONEBRIDGE ROAD
WILMINGTON, NC 28409
910-599-1744 LICENSE No. P-1032

MISCELLANEOUS DETAILS

Sheet No.
C-8.4

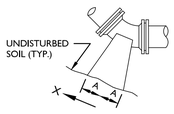

PLAN-BENDS

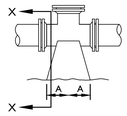

PLAN-TEES

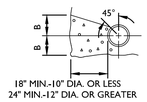

SECTION X-X
BENDS & TEES

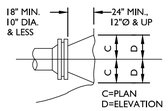

PLAN & ELEVATION
PLUGS

PIPE SIZE	90° BEND		45° BEND		22-1/2° BEND		11-1/4° BEND		TEE		PLUG	
	A	B	A	B	A	B	A	B	A	B	C	D
4"	18"	12"	10"	13"	7"	10"	7"	10"	12"	14"	13"	6"
6"	18"	12"	10"	13"	7"	10"	7"	10"	12"	14"	19"	9"
8"	24"	18"	13"	18"	10"	12"	10"	12"	16"	18"	25"	11"
10"	28"	22"	15"	22"	12"	15"	12"	15"	20"	22"	31"	14"
12"	32"	28"	19"	28"	14"	18"	14"	18"	22"	28"	37"	17"
16"	54"	38"	30"	36"	18"	36"	18"	36"	36"	42"	54"	24"

ASSUME 2000 PSF SOIL (SAND & GRAVEL WITH CLAY)

NOTES:

1. BASED ON 200 PSI STATIC PRESSURE PLUS AWWA WATER HAMMER ALLOWANCE.
2. ALL BEARING SURFACES TO BE CARRIED TO UNDISTURBED GROUND.
3. THRUST BLOCKS TO BE USED AT ALL LINES OPERATING UNDER PRESSURE.
4. CONCRETE SHALL NOT CONTACT BOLTS OR MECHANICAL FITTINGS.
5. CONCRETE SHALL BE 3000 PSI.
6. TRENCHES SHALL CONFORM WITH STANDARD EMBEDMENT DETAIL
7. ALL BENDS AND INTERSECTIONS SHALL HAVE CONCRETE THRUST BLOCKING.
8. SEE STD. THRUST BLOCK SHEET 2 OF 4 FOR OTHER SOILS.

PSD NO. 1 - THRUST BLOCKING DETAIL

NOT TO SCALE

REACTION BEARING AREAS FOR HORIZONTAL WATER/SEWER PIPE BENDS

BASED ON TEST PRESSURE OF 200 P.S.I.

ALL AREAS GIVEN IN SQUARE FEET.

SIZE AND DEGREE OF BEND	STATIC THRUST IN POUNDS	MODERATELY DRY CLAY 4000 LBS/FT²	SOFT CLAY 2000 LBS/FT²	GRAVEL / COARSE SAND 1600 LBS/FT²	DRY CLAY - ALWAYS DRY 8000 LBS/FT²	SAND, COMPACT FIRM 8000 LBS/FT²	SAND, CLEAN DRY 4000 LBS/FT²	QUICKSAND - VERY POOR SOIL 1000 LBS/FT²	ROCK - POOR 10,000 LBS/FT²
6"									
11 1/4 °	1,108	1	1	1	1	1	1	2	1
22 1/2 °	2,207	1	2	2	1	1	1	3	1
45 °	4,328	2	3	3	1	1	2	5	1
90 °	7,996	2	4	5	1	1	2	8	1
PLUG	5,655	2	3	4	1	1	2	6	1
8"									
11 1/4 °	1,970	1	1	2	1	1	1	2	1
22 1/2 °	3,922	1	2	3	1	1	1	4	1
45 °	7,694	2	4	5	1	1	2	8	1
90 °	14,215	4	8	9	2	2	4	15	2
PLUG	10,053	3	5	6	2	2	3	10	1
12"									
11 1/4 °	4,433	2	3	3	1	1	2	5	1
22 1/2 °	8,826	3	5	6	2	2	3	9	1
45 °	17,312	5	9	11	3	3	5	18	2
90 °	31,983	8	16	19	4	4	8	32	4
PLUG	22,619	6	12	14	3	3	6	23	3
16"									
11 1/4 °	7,881	2	4	5	1	1	2	8	1
22 1/2 °	15,691	4	8	10	2	2	4	16	2
45 °	30,779	8	16	19	4	4	8	31	4
90 °	56,861	15	29	35	8	8	15	57	6
PLUG	40,213	10	21	25	5	5	10	41	5

REACTION BEARING AREAS ARE IN SQUARE FEET MEASURED IN A VERTICAL PLANE IN THE TRENCH SIDE AT AN ANGLE OF 90° TO THE THRUST VECTOR.

USE 6" - 90° BEND VALUE FOR HYDRANTS FOR ADDITIONAL SAFETY FACTOR.

PSD NO.2 - THRUST BLOCKING DESIGN QUANTITY TABLE

NOT TO SCALE

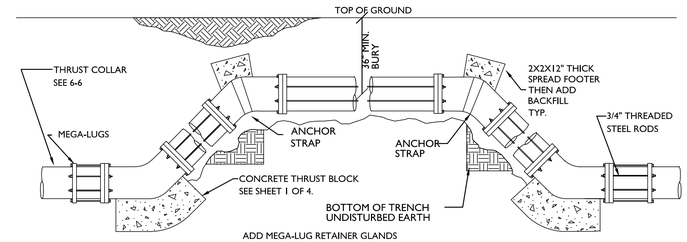

ROD REQUIREMENTS

SIZE OF 45 BEND	STATIC THRUST IN POUNDS	NO. OF RODS REQUIRED
6"	4,328	4
8"	7,694	4
12"	17,312	4
16"	30,779	8
24"	69,252	8

GENERAL NOTES:

1. STEEL RODS AND BOLTS SHALL BE 3/4" HOT OR COLD DIPPED GALVANIZED.
2. CONCRETE SHALL NOT CONTACT BOLTS OR ENDS OF MECHANICAL JOINT BENDS.
3. MEGA-LUGS TO BE USED AT ALL FITTINGS.
4. MUST USE DUCTILE IRON EYE BOLTS WHERE NECESSARY.

PSD NO. 3 - VERTICAL BEND DETAIL

NOT TO SCALE

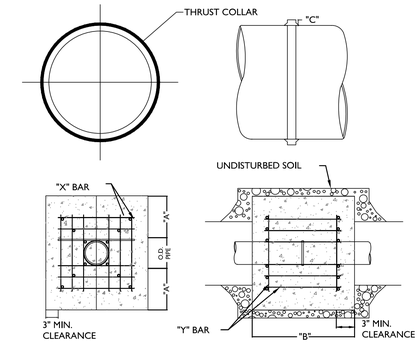

REINFORCING REQUIREMENTS

I.D. PIPE	REBAR SIZE	"X" BAR LENGTH	"X" BAR WEIGHT	"Y" BAR LENGTH	"Y" BAR WEIGHT	NO. REQUIRED
6" - 36"	#5	2'-2"+ O.D. PIPE	1.043 LBS/FT	1'-1"	1.1 LBS. EACH	X-24, Y-12
48" & greater	#6	3'-0"+ O.D. PIPE	1.502 LBS/FT	1'-3"	1.9 LBS. EACH	X-24, Y-12

THRUST COLLAR, AND THRUST SCHEDULE

I.D. PIPE	"A"	"B"	"C"-6"-16", 20"-24", 30"-36", 48"
6" - 36"	1'-4"	1'-7"	2" 3" 4"
48" & greater	1'-8"	1'-9"	6"

NOTES:

1. CONCRETE SHALL BE 3000 PSI AND TRANSIT MIXED.
2. REINFORCING BARS SHALL BE DEFORMED AND TIED TOGETHER.
3. TRENCH BOTTOM WIDTH IN VICINITY OF THRUST BLOCK INSTALLATION SHALL BE THE MINIMUM WIDTH AS SHOWN ON STANDARD EMBEDMENT DETAIL.
4. BACKFILL TAMPED IN 6" LIFTS PER STANDARD EMBEDMENT DETAIL.
5. THRUST COLLAR MUST BE FACTORY WELDED ON BOTH SIDES ALONG BOTH EDGES OF COLLAR AROUND CIRCUMFERENCE.

PSD NO. 4 - THRUST COLLAR DETAIL

NOT TO SCALE

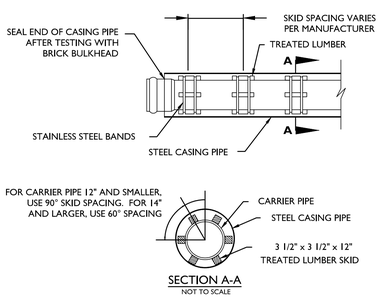

SECTION A-A
NOT TO SCALE

NOTES:
1. SKID TO BE PLACED TO PROVIDE PROPER SUPPORT, ALIGNMENT, AND GRADE AS SPECIFIED. CONTINUOUS SKIDS MAY BE USED AS ALTERNATIVE. 2. OIL, GREASE, OR PETROLEUM PRODUCT MAY NOT BE USED AS LUBRICANT.
3. CASING PIPE TO BE OF FERROUS METAL AND HAVE A MINIMUM DIAMETER TWICE THATOF THE CARRIER PIPE.
4. CASING PIPE TO HAVE A MINIMUM THICKNESS OF .25".
5. FOR ALL BORES UNDER NCDOT RIGHT OF WAYS FOLLOW ALL NCDOT GUIDELINES FOR PIPE SIZE AND THICKNESS.

PSD NO. 5 - PIPE CASING DETAIL

NOT TO SCALE

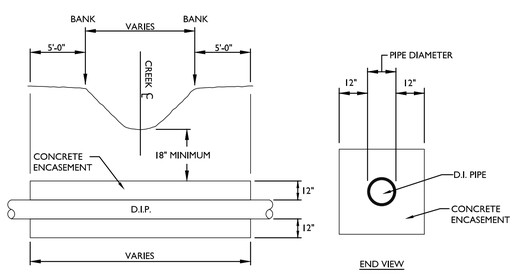

CROSS SECTION

END VIEW

CASING PIPE SIZE (O.D.)	WALL THICKNESS
4" - 12 3/4"	0.250"
16"	0.250"
18"	0.250"
20"	0.250"
24"	0.250"
30"	0.312"
36"	0.375"
48"	0.500"

NOTES:

1. CONCRETE SHALL BE 3,000 P.S.I.
2. CONCRETE ENCASEMENT NOT REQUIRED WHEN PIPE IS AT LEAST THREE (3) FEET UNDER CENTERLINE OF CREEK BOTTOM.
3. ALL STREAM CROSSINGS TO BE PERMITTED BY NCDENR.
4. ALL WETLAND CROSSINGS AND COASTAL WETLAND CROSSINGS TO BE PERMITTED BY ALL APPROPRIATE AGENCIES.

PSD NO. 6 - STREAM/WETLAND CROSSING DETAIL DETAIL

NOT TO SCALE

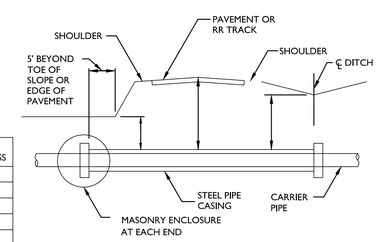

TYPICAL PIPE CROSSING

ENCASEMENTS SHALL EXTEND FROM DITCH LINE TO DITCH LINE IN CUT SECTIONS, FIVE (5) FEET BEYOND THE TOE OF SLOPES IN FILL SECTIONS, AND TEN (10) FEET BEYOND EDGE OF PAVEMENT IN SECTIONS WITH NO DITCH OR FILL AREA.

NOTES:

1. STEEL ENCASEMENT PIPE SHALL CONFORM TO ASTM A-139 WITH ALL THICKNESS AND GRADE AS DEFINED IN THE SPECIFICATIONS. MINIMUM ALLOWABLE YIELD STRENGTH IS 35,000 PSI.
2. CARRIER PIPE SHALL BE ADEQUATELY SUPPORTED THE ENTIRE LENGTH WITHIN THE CASING BY USING "SPIDER" STEEL SUPPORTS AT A MAXIMUM OF 9 FOOT CENTERS (ONE AT EACH JOINT AND ONE INTERMEDIATE). OTHER METHODS MUST MEET APPROVAL OF THE ENGINEER.
3. NO EXCAVATED MATERIAL SHALL BE PLACED IN ANY STREAM, DITCH OR DRAINAGE WAY.
4. THE CONTRACTOR IS RESPONSIBLE FOR LOCATING ALL UNDERGROUND UTILITIES PRIOR TO THE START OF CONSTRUCTION.
5. THE CONTRACTOR IS RESPONSIBLE FOR ANY SEDIMENT AND EROSION CONTROL PRACTICES REQUIRED DURING CONSTRUCTION AND THE SUBSEQUENT STABILIZATION OF ALL DISTURBED AREAS AFTER CONSTRUCTION.
6. THE CONTRACTOR IS RESPONSIBLE FOR ALL LAY DOWN AND STOCKPILE AREAS.
7. FOR BORES ON THE NCDOT RIGHT OF WAY, NO WORK WILL BEGIN UNTIL THE CONTRACTOR HAS A COPY OF THE NCDOT ENCROACHMENT PERMIT FOR THE PROJECT.

PSD NO. 7 - BORE DETAIL DETAIL

NOT TO SCALE

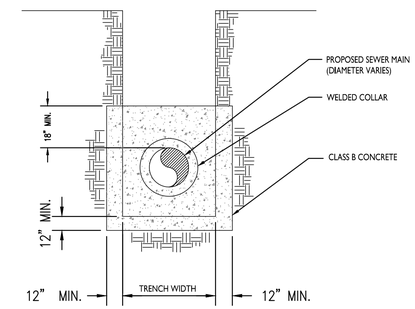

SECTION

NOTES:
1. DO NOT EXCEED 150 FEET BETWEEN COLLARS.

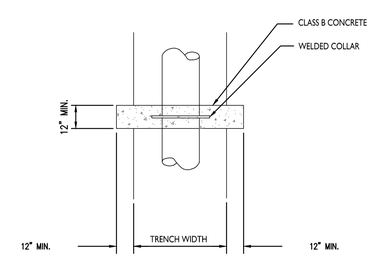

PLAN

PSD NO. 8 - ANTI SEEP COLLAR DETAIL

NOT TO SCALE

NORTH CAROLINA PROFESSIONAL SEAL 019742 ENGINEER MARK N. HARGROVE

5/4/2022

STANDARD DETAILS SHEET A

PLURIS, LLC

No.	Revision	Date	By

Designer MNH	Scale AS SHOWN
Drawn By MNH	Date MAY, 2022
Checked By MNH	Job No.

OAK GROVE @ BLAKE FARM

PENER COUNTY NORTH CAROLINA

TRASK LAND COMPANY, INC.
1022 ASHES DRIVE, SUITE 201
WILMINGTON, NC 28405

PORT CITY CONSULTING ENGINEERS, PLLC
6216 STONEBRIDGE ROAD
WILMINGTON, NC 28409
910-599-1744 LICENSE No. P-1032

SEWER DETAILS

Sheet No. C-9.0

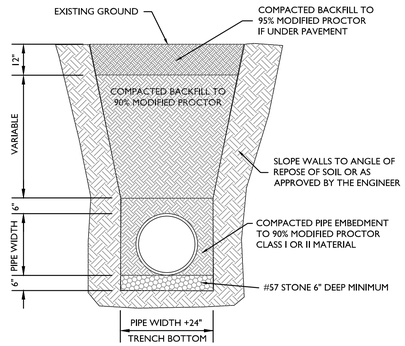

NOTES:
1. MINIMUM BURY DEPTH FOR ALL FORCE MAINS AND GRAVITY LINES IS 36" UNLESS SPECIFICALLY ALLOWED BY THE ENGINEER. ALL LINES SHALLOWER THAN 36" MUST GIVE CONSIDERATION TO USING HIGHER PRESSURE AND THICKNESS CLASSES OF DIP.
2. ALL LINES TO BE BEDDED IN 6" OF #57 STONE MINIMUM. FOR LINES INSTALLED BELOW THE WATER TABLE #57 STONE SHOULD EXTEND TO THE SPRING LINE OF THE PIPE AT A MINIMUM.
3. THE USE OF #57 STONE BEDDING AND BACKFILL SHOULD BE COMMENSURATE WITH THE CONDITIONS IN THE TRENCH. THE CONTRACTOR IS RESPONSIBLE FOR PROPER BEDDING AND BACKFILLING TO INSURE PIPE STABILITY AND UNIFORM GRADE.

PSD NO. 9 - PIPE TRENCH AND BEDDING DETAIL

NOT TO SCALE

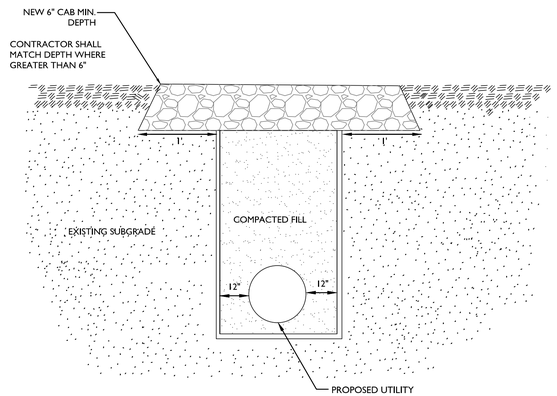

NOTES:
1. THE REPLACED STONE SHALL CONSIST OF ABC MATERIAL COMPACTED TO A DENSITY EQUAL TO 100% OF THAT OBTAINED BY COMPACTING A SAMPLE OF THE MATERIAL IN ACCORDANCE WITH ASSMTO T-80 AS MODIFIED BY NCDOT.

PSD NO. 10 - GRAVEL DRIVEWAY REPAIR DETAIL

NOT TO SCALE

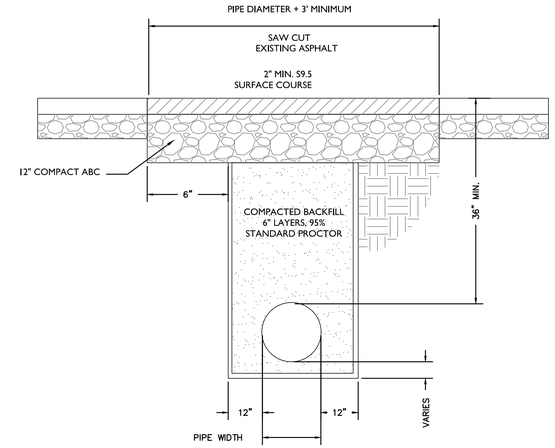

NOTES:
1. THE PAVEMENT SHALL BE DEFINED BY A STRAIGHT EDGE, PREFERABLY A MACHINED SAW CUT.
2. THE TRENCH SUBGRADE MATERIAL SHALL BE BACKFILLED WITH DRY SOIL OR ABC STONE USING MAXIMUM 6" LIFTS TO WITHIN 10" OF THE ROAD SURFACE. THE BACKFILL SHALL BE COMPACTED PER ASTM D698 TO A DENSITY OF 95% OF THE STANDARD PROCTOR DENSITY.
3. WITHIN ROADS MAINTAINED BY NCDOT, THE TRENCH SHALL BE BACKFILLED AND COMPACTED USING FLOWABLE FILL OR ABC STONE TO WITHIN 12" OF THE ROAD SURFACE. WHERE ABC STONE IS USED, IT SHALL BE COMPACTED TO A DENSITY OF AT LEAST 95% OF THAT OBTAINED BY COMPACTING A SAMPLE OF THE MATERIAL IN ACCORDANCE WITH AASHTO-99 AS MODIFIED BY NCDOT.
4. THE FINAL 1' OF FILL SHALL CONSIST OF ABC MATERIAL COMPACTED TO A DENSITY EQUAL TO 100% OF THAT OBTAINED BY COMPACTING A SAMPLE OF THE MATERIAL IN ACCORDANCE WITH ASSHTO T-80 AS MODIFIED BY NCDOT. BITUMINOUS BASE OR BINDER MAY BE SUBSTITUTED IF APPROVED BY THE ENGINEER.
5. THE ENTIRE THICKNESS/VERTICAL EDGE OF THE CUT SHALL BE TACKED.
6. THE SAME DEPTH OF PAVEMENT MATERIAL WHICH EXISTS SHALL BE REINSTALLED, BUT IN NO CASE SHALL THE ASPHALT BE LESS THAN 2" THICK.
7. THE ASPHALT PAVEMENT MATERIAL SHALL BE INSTALLED AND COMPACTED THOROUGHLY TO ACHIEVE A SMOOTH LEVEL PATCH.

PSD NO. 11 - ASPHALT PAVING REPAIR DETAIL

NOT TO SCALE

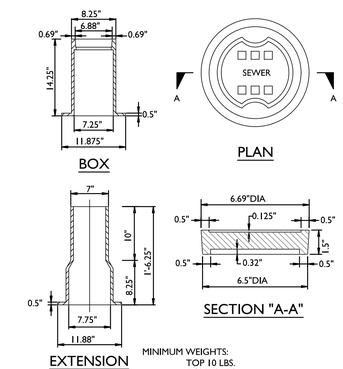

MINIMUM WEIGHTS:
TOP 10 LBS.
BOX 40 LBS.
EXTENSION 40 LBS.

NOTE:
VALVE BOX LID NOT FOR USE IN ROADWAY LOCATIONS.
HEAVY DUTY LID REQUIRED. SEE SD 14-08.

PSD NO. 12 - CAST IRON VALVE BOX DETAIL

NOT TO SCALE

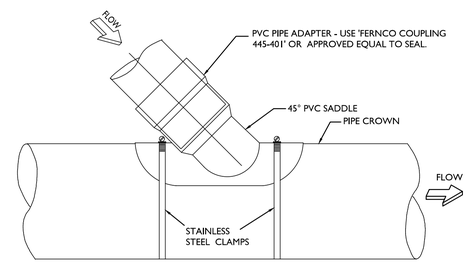

BACKFILL UNDER PVC SADDLE, ADAPTOR, AND PIPE BEND WITH #67 STONE AS SHOWN ON PIPE EMBEDMENT DETAIL.

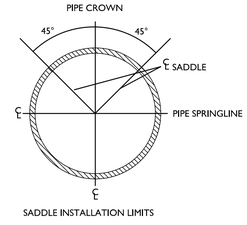

NOTE:
USE AT DEPTHS FROM 3 TO 6-FEET

NORTH CAROLINA PROFESSIONAL SEAL 019742 ENGINEER MARK N. HARGROVE
5/4/2022

PSD NO. 16 - SADDLE INSTALLATION DETAIL

NOT TO SCALE

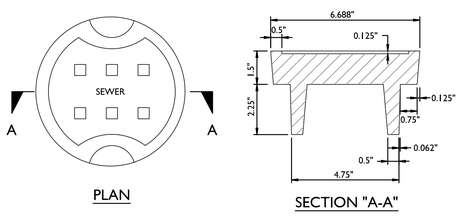

GRE-WVC-6HD, CAST IRON OR EQUAL
APPROX. WEIGHT 17lbs.

PSD NO. 13 - HEAVY DUTY CAST IRON VALVE BOX LID DETAIL

NOT TO SCALE

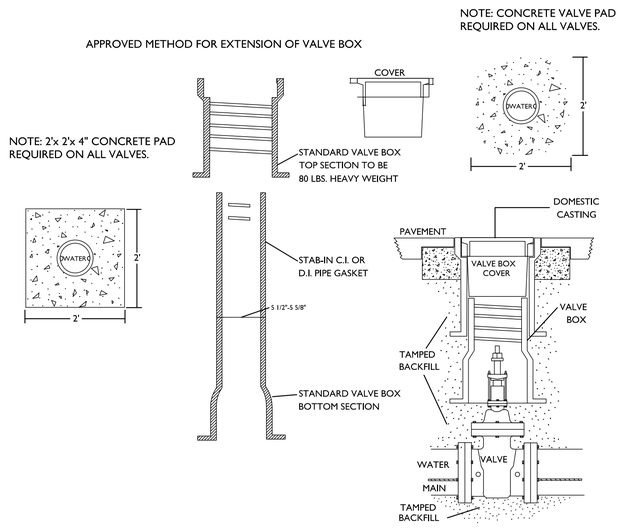

NOTE: VALVE BOX NOT TO CONTACT FORCE MAIN NOR VALVE. ALL TRAFFIC CASTINGS MUST BE CLASS 35 OR GREATER. VALVE BOX SHALL BE THREADED TYPE.

PSD NO. 14 - VALVE BOX INSTALLATION AND EXTENSION DETAIL

NOT TO SCALE

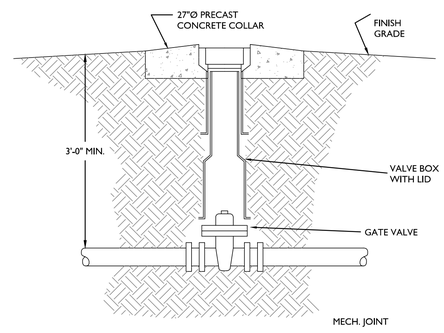

PSD NO. 15 - GATE VALVE DETAIL

NOT TO SCALE

STANDARD DETAILS SHEET B

PLURIS, LLC

No.	Revision	Date	By

Designer MNH	Scale AS SHOWN
Drawn By MNH	Date MAY, 2022
Checked By MNH	Job No.

OAK GROVE @ BLAKE FARM
PENER COUNTY NORTH CAROLINA

TRASK LAND COMPANY, INC.
1022 ASHES DRIVE, SUITE 201
WILMINGTON, NC 28405

PORT CITY CONSULTING ENGINEERS, PLLC
6216 STONEBRIDGE ROAD
WILMINGTON, NC 28409
910-599-1744 LICENSE No. P-1032

SEWER DETAILS

Sheet No. C-9.1

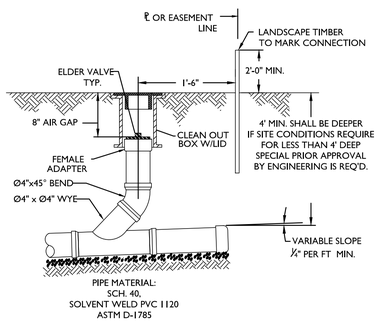

NOTE: ALL SEVICES FOR SINGLE FAMILY RESIDENCES AND SINGLE COMMERCIAL STRUCTURES ARE TO BE INSTALLED WITH AN ELDER VALVE .

PSD NO. 17A - STANDARD SERVICE CLEAN OUT DETAIL

NOT TO SCALE

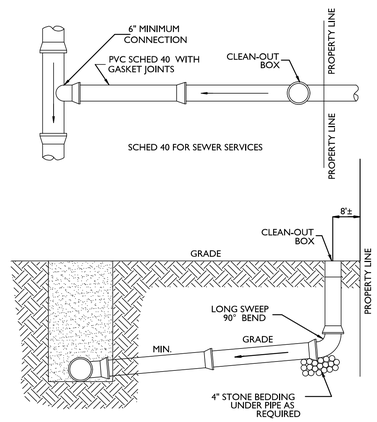

PSD NO. 17 - STANDARD SERVICE DETAIL

NOT TO SCALE

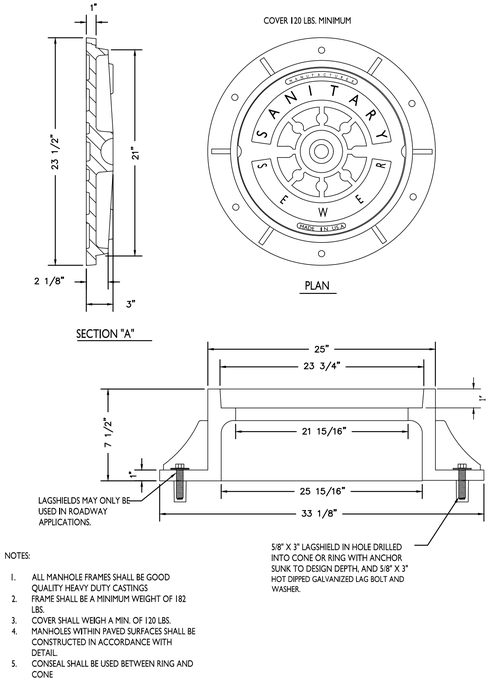

NOTES:

1. ALL MANHOLE FRAMES SHALL BE GOOD QUALITY HEAVY DUTY CASTINGS
2. FRAME SHALL BE A MINIMUM WEIGHT OF 182 LBS.
3. COVER SHALL WEIGH A MIN. OF 120 LBS.
4. MANHOLES WITHIN PAVED SURFACES SHALL BE CONSTRUCTED IN ACCORDANCE WITH DETAIL.
5. CONSEAL SHALL BE USED BETWEEN RING AND CONE

PSD NO. 18 - STANDARD MANHOLE RING AND COVER DETAIL

NOT TO SCALE

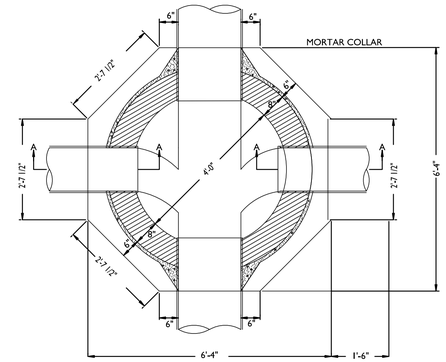

PSD NO. 19 - SANITARY SEWER MANHOLE PLAN VIEW DETAIL

NOT TO SCALE

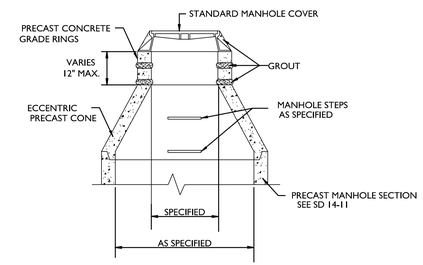

PSD NO. 20 - SANITARY SEWER PRECAST RING EXTENSION DETAIL

NOT TO SCALE

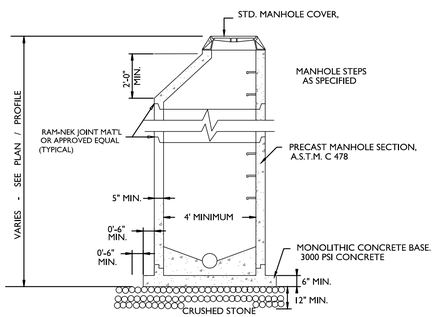

NOTE:
ADDITIONAL EXTENDED BASE MAY BE REQUIRED WHERE MANHOLES DEPENDING ON ANTIFLOTATION CALCULATIONS

PSD NO. 21 - SANITARY SEWER PRECAST MANHOLE DETAIL

NOT TO SCALE

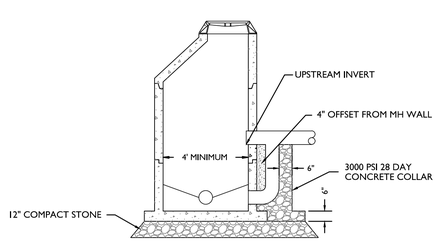

NOTE:
CONCRETE COLLAR TO EXTEND 6" ON EACH SIDE OF DROP PIPE. USE OUTSIDE DROP MANHOLE WHEN UPSTREAM INVERT IS OVER 24" HIGHER THAN DOWNSTREAM INVERT.

PSD NO. 22 - OUTSIDE DROP MANHOLE DETAIL

NOT TO SCALE

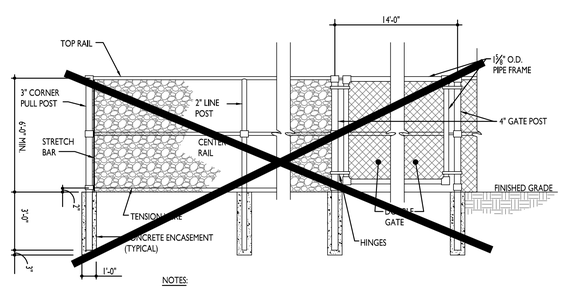

NOTES:

1. DOUBLE GATE SHALL HAVE A LOCKING MECHANISM, DROP ROD, AND TRUSS ROD.
2. ALL FENCE COMPONENT MATERIALS SHALL BE EITHER HOT DIPPED GALVANIZED STEEL OR IRON. FENCE FABRIC SHALL BE ALUMINUM COATED.
3. PRIVACY SLATS WHEN INDICATED

PSD NO. 23 - LIFT STATION FENCING DETAIL

NOT TO SCALE

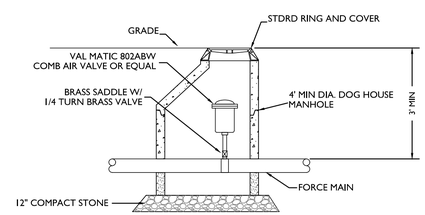

NOTE:
AIR RELEASE VALVES TO BE LOCATED AT HIGH POINTS OF THE FORCE MAIN WHERE GRADE DIFFERENCES EXCEED 10' IN ELEVATION.

PSD NO. 24 - AIR RELEASE MANHOLE DETAIL

NOT TO SCALE

NORTH CAROLINA PROFESSIONAL SEAL 019742 ENGINEER MARK N. HARGROVE

5/4/2022

STANDARD DETAILS SHEET C

PLURIS, LLC

No.	Revision	Date	By

Designer MNH	Scale AS SHOWN
Drawn By MNH	Date MAY, 2022
Checked By MNH	Job No.

OAK GROVE @ BLAKE FARM
PENER COUNTY NORTH CAROLINA

TRASK LAND COMPANY, INC.
1022 ASHES DRIVE, SUITE 201
WILMINGTON, NC 28405

PORT CITY CONSULTING ENGINEERS, PLLC
6216 STONEBRIDGE ROAD
WILMINGTON, NC 28409
910-599-1744 LICENSE No. P-1032

SEWER DETAILS

Sheet No. C-9.2

Restrained Length In Feet Each Side of Fitting Joint

PIPE DIAMETER (INCHES)	D. I. P.				P. V. C.			
	90°	45°	22 1/2°	11 1/4°	90°	45°	22 1/2°	11 1/4°
3"	30'	15'	10'	5'	40'	20'	10'	5'
4"	35'	15'	10'	5'	55'	25'	15'	10'
6"	55'	25	10'	5'	80'	35'	20'	10'
8"	65'	30	15'	10'	90'	40'	20'	10'
10"	80'	35	20'	10'	110'	50'	25'	15'
12"	95'	40	20'	10'	130'	55'	30'	15'
16"	120'	50	25'	15'	165'	70'	35'	20'
20"	150'	65	30'	15'	200'	85'	40'	20'
24"	180'	70	35'	20'	210'	90'	45'	25'
30"	190'	80	40'	20'	250'	105'	50'	25'
36"	220'	95	45'	25'	0	0	0	0
42"	245'	105'	50'	25'	0	0	0	0
48"	260'	120'	60'	30'	0	0	0	0

Restrained lengths for valves, dead ends and branches from tees shall be the same as for 90° (degree) bends

Restrained Length In Feet For Reducer

PIPE DIAMETER (INCHES)	3"	4"	6"	8"	10"	12"	16"	20"	24"	30"
3"	0	0	0	0	0	0	0	0	0	0
4"	40'	0	0	0	0	0	0	0	0	0
6"	50'	45'	0	0	0	0	0	0	0	0
8"	75'	70'	40'	0	0	0	0	0	0	0
10"	95'	90'	70'	40'	0	0	0	0	0	0
12"	120'	115'	100'	75'	40'	0	0	0	0	0
16"	160'	155'	140'	125'	100'	70'	0	0	0	0
20"	200'	195'	185'	170'	150'	130'	75'	0	0	0
24"	160'	155'	150'	140'	135'	120'	90'	50'	0	0
30"	195'	190'	185'	180'	170'	160'	120'	105'	70'	0
36"	225'	220'	215'	210'	205'	195'	180'	150'	125'	70'
42"	245'	240'	235'	230'	225'	220'	205'	180'	155'	105'
48"	255'	250'	245'	240'	235'	230'	215'	195'	175'	125'

Length of restrained joint for larger diameter pipe

NOTES:
1. PENDER COUNTY STANDARD RESTRAINT METHOD IS MJ "GRIP RING" TYPE. ALL RJ TO BE MJ "GRIP RING" TYPE, UNLESS SPECIFICALLY APPROVED BY PCU IN WRITING.
2. ALL FITTINGS AND JOINTS SHALL BE RESTRAINED JOINT.
3. "L" ABOVE IS GIVEN IN FEET FROM FITTING JOINT.

PENDER COUNTY UTILITIES
605 EAST FREMONT STREET
BURGAW, NC 28425

RESTRAINED JOINT TABLE
STANDARD DETAIL
VERSION #1 - OCTOBER 2015

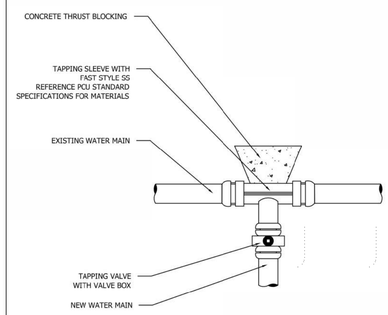

TAPPING SLEEVE AND VALVE ASSEMBLY DETAIL
NOT TO SCALE

PENDER COUNTY UTILITIES
605 EAST FREMONT STREET
BURGAW, NC 28425

TAPPING SLEEVE AND VALVE ASSEMBLY
STANDARD DETAIL
VERSION #3 - FEB 2016

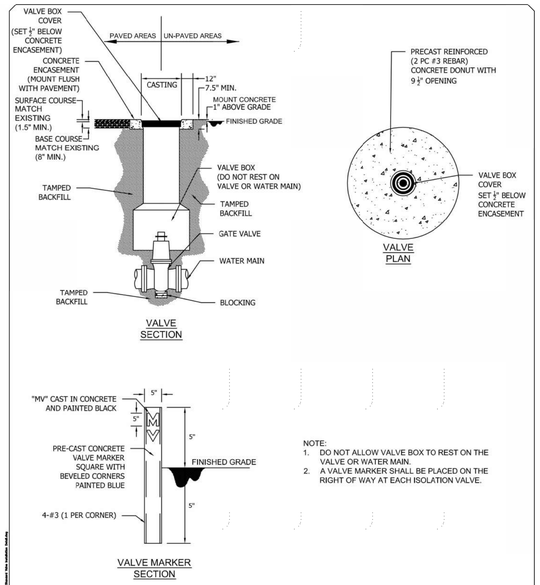

NOTE:
1. DO NOT ALLOW VALVE BOX TO REST ON THE VALVE OR WATER MAIN.
2. A VALVE MARKER SHALL BE PLACED ON THE RIGHT OF WAY AT EACH ISOLATION VALVE.

VALVE INSTALLATION DETAIL
NOT TO SCALE

PENDER COUNTY UTILITIES
605 EAST FREMONT STREET
BURGAW, NC 28425

VALVE INSTALLATION
STANDARD DETAIL
VERSION #3 - JUNE 2016

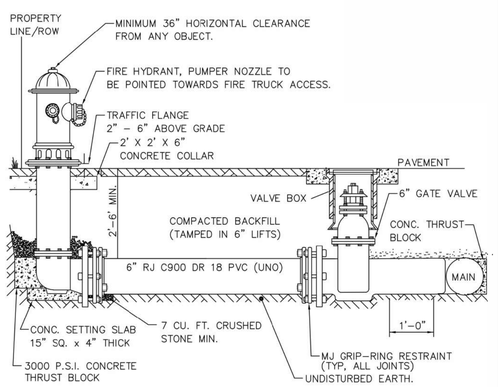

NOTES:

1. FIRE HYDRANTS WILL BE INSTALLED IN TRUE VERTICAL POSITION.
2. FIRE HYDRANTS TO BE LOCATED IN RIGHT-OF-WAY.
3. INSTALL WITH BURY LINE FLUSH TO FINAL GRADE.
4. HYDRANTS TO BE AVK SERIES 2780, MUELLER SUPER CENTURION A473 W/PENDER CO. OPTIONS 981, OR CLOW MEDALLION WITH STAINLESS STEEL STEMS. HYDRANTS SHALL BE NOSTALGIC STYLE DRY BARREL.
5. HYDRANTS TO BE RED WITH SILVER CAPS AND BONNET.

FIRE HYDRANT ASSEMBLY DETAIL
NOT TO SCALE

PENDER COUNTY UTILITIES
605 EAST FREMONT STREET
BURGAW, NC 28425

FIRE HYDRANT ASSEMBLY
STANDARD DETAIL
VERSION #2 - APRIL 2016

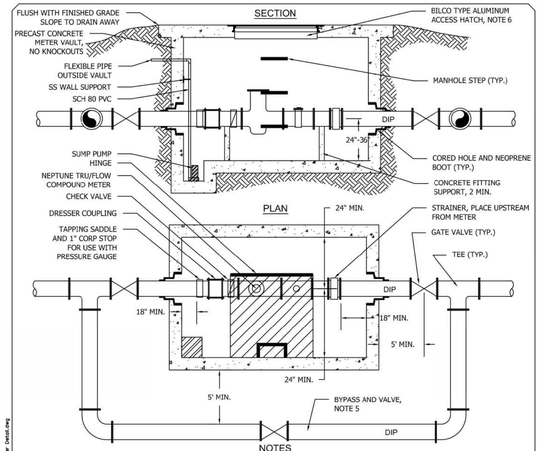

NOTES

1. VAULTS SHALL BE PROPERLY DESIGNED AND SIZED FOR EACH SPECIFIC APPLICATION AND SITE CONDITION.
2. VAULTS SHALL BE LOCATED SUCH THAT THE RIM ELEVATION IS A MINIMUM OF 2 FEET ABOVE THE BASE FLOOD ELEVATION.
3. PROVIDE ADEQUATE DESIGN FOR ALL SITE CONDITIONS INCLUDING BUT NOT LIMITED TO FLOTATION, TRAFFIC LOADING, ACCESSIBILITY, PROJECTED DEMAND, AND OTHER DESIGN CRITERIA AS REQUIRED.
4. MINIMUM CLEARANCES SHOWN ARE REQUIRED FOR PROPER ACCESSIBILITY TO ALLOW OPERATION AND MAINTENANCE. CLEARANCES SHALL BE VERIFIED DURING THE SUBMITTAL PROCESS.
5. METERS SHALL BE PROVIDED A BYPASS WITH AT LEAST ONE VALVE OF THE SAME SIZE AS THE METER.
6. THE ACCESS HATCH SHALL BE LOCATED OVER THE METER, AND SHALL BE LOCATED TO ALLOW ENTRY WITHOUT CLIMBING OVER VAULT COMPONENTS. HATCH SHALL ALSO BE LOCATED AND OF APPROPRIATE SIZE TO ALLOW REMOVAL OF EQUIPMENT. PROVIDE 1 3/4" HOLE IN ACCESS HATCH FOR TOUCH-READ SYSTEM.
7. THRUST RESTRAINT AND SUPPORTS SHALL BE PROPERLY DESIGNED, SIZED, AND INSTALLED TO PREVENT MOVEMENT OF ALL VAULT COMPONENTS, INCLUDING THE BY PASS.
8. THERE SHALL BE NO VALVES, DIRECTIONAL CHANGES, OR OTHER DISTURBANCES WITHIN 5 PIPE DIAMETERS UPSTREAM OF THE METER THAT MAY INTERFERE WITH LAMINAR FLOW.
9. VAULTS SHALL BE PROPERLY WATERPROOFED AND HYDROSTATICALLY TESTED. AN AUTOMATIC SUMP PUMP SHALL BE PROVIDED. THE FLOOR OF THE VAULT SHALL BE SLOPED TOWARD THE SUMP.
10. AT LEAST ONE, 20 AMP, GFI OUTLET WITH STANDARD THREE PRONG RECEPTACLE SHALL BE PROVIDED ON THE ELECTRIC PANEL. THE OUTLET SHALL BE WEATHER PROOF AND HAVE A LOCKABLE COVER.
11. AT LEAST ONE SPARE BREAKER SHALL BE PROVIDED IN THE ELECTRICAL PANEL.

BULK METER DETAIL
NOT TO SCALE

PENDER COUNTY UTILITIES
605 EAST FREMONT STREET
BURGAW, NC 28525

BULK METER
STANDARD DETAIL
VERSION #3 - FEB 2016

NORTH CAROLINA PROFESSIONAL SEAL 019742 ENGINEER MARK N. HARGROVE
5/4/2022

No.	Revision	Date	By

Designer MNH	Scale AS SHOWN
Drawn By MNH	Date MAY, 2022
Checked By MNH	Job No.

OAK GROVE @ BLAKE FARM
PENER COUNTY NORTH CAROLINA

TRASK LAND COMPANY, INC.
1022 ASHES DRIVE, SUITE 201
WILMINGTON, NC 28405

PORT CITY CONSULTING ENGINEERS, PLLC
6216 STONEBRIDGE ROAD
WILMINGTON, NC 28409
910-599-1744 LICENSE No. P-1032

WATER DETAILS

Sheet No.
C-10.0

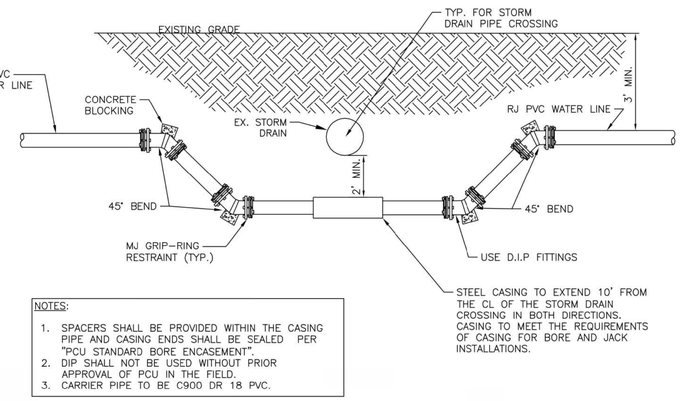

NOTES:

1. SPACERS SHALL BE PROVIDED WITHIN THE CASING PIPE AND CASING ENDS SHALL BE SEALED PER "PCU STANDARD BORE ENCASEMENT".
2. DIP SHALL NOT BE USED WITHOUT PRIOR APPROVAL OF PCU IN THE FIELD.
3. CARRIER PIPE TO BE C900 DR 18 PVC.

PIPE CROSSING "A" DETAIL

NOT TO SCALE

PENDER COUNTY UTILITIES
605 EAST FREMONT STREET
BURGAW, NC 28425

PIPE CROSSING "A"
STANDARD DETAIL
VERSION #1 - SEPTEMBER 2015

PCU STANDARD NOTES

1. A PRE-CONSTRUCTION MEETING IS REQUIRED BEFORE BEGINNING WORK. THE MEETING MUST BE SCHEDULED WITH PENDER COUNTY UTILITIES (PCU) AT LEAST ONE WEEK IN ADVANCE. ATTENDEES MUST INCLUDE PCU, THE UTILITY CONTRACTOR'S SUPERINTENDENT, THE SUPPLIER, AND THE CONSULTING ENGINEER.
2. ALL MATERIALS USED SHALL CONFORM TO PENDER COUNTY UTILITIES REQUIREMENTS. NON-CONFORMING MATERIAL WILL NOT BE ACCEPTED FOR FINAL CERTIFICATION.
3. ALL PIPE SHALL BE C900 DR18 PVC, UNLESS OTHERWISE NOTED (SEE PCU STANDARD DETAIL). PVC PIPE TO BE SDR 21 WHERE C900 IS UNAVAILABLE. THE USE OF DUCTILE IRON PIPE (DIP) IS REQUIRED UNDER PAVED AREAS. PCU MUST APPROVE THE USE OF DIP IN THE FIELD BEFORE INSTALLATION IN OTHER LOCATIONS.
4. PCU STANDARD WATERLINE PIPE RESTRAINING METHOD IS MJ GRIP RINGS. AT A MINIMUM ALL FITTINGS, VALVES, ETC. MUST BE RESTRAINED (SEE PCU STANDARD DETAIL).
5. PCU MUST INSPECT CASING INSTALLATIONS PRIOR TO BACKFILL. PCU MUST WITNESS PRESSURE TESTS, AND WITHDRAWAL OF BACTERIOLOGICAL SAMPLES. CONTACT PCU UTILITIES INSPECTOR TO SCHEDULE.
6. CLOSE-OUT DOCUMENTS WHICH MUST BE RECEIVED PRIOR TO PCU SIGNING THE NCDEQ PWSS APPLICANT CERTIFICATION INCLUDE: BACTERIOLOGICAL TESTS, PRESSURE TESTS, DEED OF DEDICATION, AFFIDAVIT/RELEASE OF LIENS, WARRANTY, AND RECORD DRAWINGS (PDF & CAD).
7. AN 18-MONTH WARRANTY PERIOD APPLIES TO ALL WATERLINE CONSTRUCTION. THIS WARRANTY PERIOD DOES NOT BEGIN UNTIL FINAL APPROVAL OF THE SYSTEM HAS BEEN RECEIVED FROM NCDEQ PWSS.

PENDER COUNTY UTILITIES
605 EAST FREMONT STREET
PO BOX 995, BURGAW, NC 28425

STANDARD NOTES
PCU WATER SYSTEMS
VERSION #3 - APRIL 2022

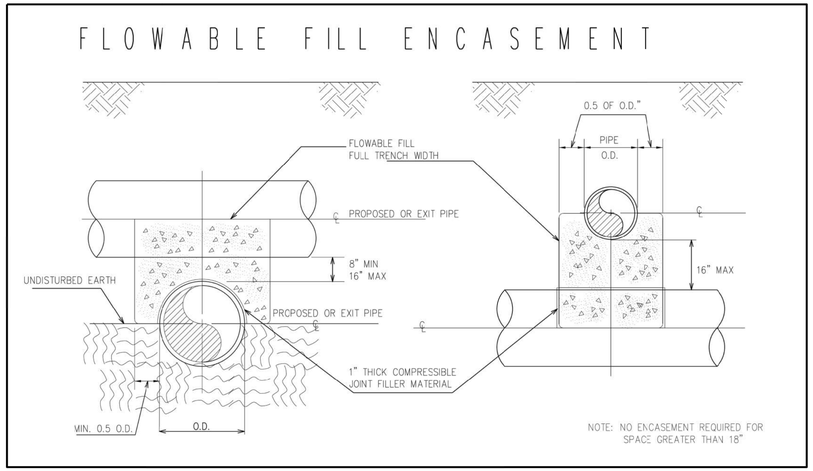

STRUCTURAL BRIDGING DETAIL

N.T.S.

NORTH CAROLINA PROFESSIONAL SEAL 019742 ENGINEER MARK N. HARGROVE
5/4/2022

No.	Revision	Date	By

Designer MNH	Scale AS SHOWN
Drawn By MNH	Date MAY, 2022
Checked By MNH	Job No.

OAK GROVE @ BLAKE FARM
PENER COUNTY NORTH CAROLINA

TRASK LAND COMPANY, INC.
1022 ASHES DRIVE, SUITE 201
WILMINGTON, NC 28405

PORT CITY CONSULTING ENGINEERS, PLLC
6216 STONEBRIDGE ROAD
WILMINGTON, NC 28409
910-599-1744 LICENSE No. P-1032

WATER DETAILS

Sheet No.
C-10.1

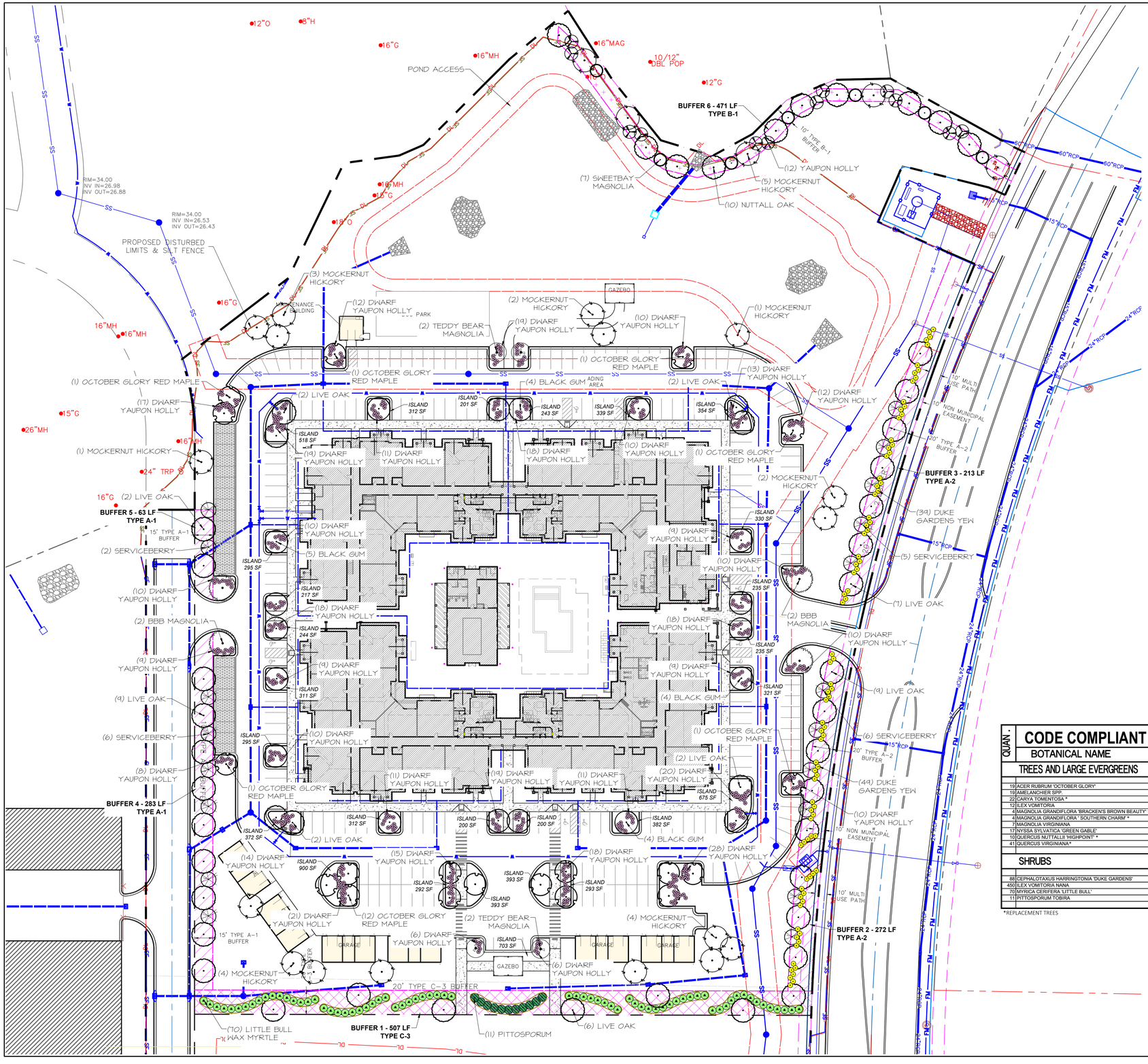

LANDSCAPE CALCULATIONS

BUFFER 1 - 20' TYPE C-3 (507 LF)

(1) CANOPY TREE / 100 LF
(6) CANOPY TREES REQUIRED

(6) LIVE OAKS PROVIDED*

6' EVERGREEN HEDGE REQUIRED

(11) PITTOSPORUM PROVIDED
(70) WAX MYRTLE PROVIDED

BUFFER 2 - 20' TYPE A-2 (272 LF)

(3) CANOPY TREES / 100 LF
(9) CANOPY TREES REQUIRED

(9) LIVE OAKS PROVIDED*

(2) UNDERSTORY TREES / 100 LF
(6) UNDERSTORY TREES REQUIRED

(6) SERVICEBERRY PROVIDED

(18) SHRUBS / 100 LF
(49) SHRUBS REQUIRED

(49) DUKE GARDENS YEW PROVIDED

BUFFER 3 - 20' TYPE A-2 (213 LF)

(3) CANOPY TREES / 100 LF
(7) CANOPY TREES REQUIRED

(7) LIVE OAKS PROVIDED*

(2) UNDERSTORY TREES / 100 LF
(5) UNDERSTORY TREES REQUIRED

(5) SERVICEBERRY PROVIDED

(18) SHRUBS / 100 LF
(39) SHRUBS REQUIRED

(39) DUKE GARDENS YEW PROVIDED

*TREES COUNTING TOWARD SIGNIFICANT TREE REPLACEMENT - SEE PLANT SCHEDULE FOR ALL REPLACEMENT TREES

BUFFER 4 - 15' TYPE A-1 (283 LF)

(3) CANOPY TREES / 100 LF
(9) CANOPY TREES REQUIRED

(9) LIVE OAKS PROVIDED*

(2) UNDERSTORY TREES / 100 LF
(6) UNDERSTORY TREES REQUIRED

(6) SERVICEBERRY PROVIDED

BUFFER 5 - 15' TYPE A-1 (63 LF)

(3) CANOPY TREES / 100 LF
(2) CANOPY TREES REQUIRED

(2) LIVE OAKS PROVIDED*

(2) UNDERSTORY TREES / 100 LF
(2) UNDERSTORY TREES REQUIRED

(2) SERVICEBERRY PROVIDED

BUFFER 6 - 10' TYPE B-1 (471 LF)

(3) CANOPY TREES / 100 LF
(15) CANOPY TREES REQUIRED

(10) NUTTALL OAKS PROVIDED*
(5) MOCKERNUT HICKORY PROVIDED*

(4) UNDERSTORY TREES / 100 LF
(19) UNDERSTORY TREES REQUIRED

(12) YAUPON HOLLY PROVIDED
(7) SWEETBAY MAGNOLIA PROVIDED

SIGNIFICANT TREE MITIGATION
(3) OAK TREES REMOVED
(1) MAGNOLIA TREE REMOVED
(11) MOCKERNUT HICKORY REMOVED

(6) OAKS REQUIRED
(2) MAGNOLIAS REQUIRED
(22) MOCKERNUT HICKORY REQUIRED

(41) LIVE OAKS PROVIDED
(5) NUTTALL OAKS PROVIDED

(8) MAGNOLIAS PROVIDED

(22) MOCKERNUT HICKORIES PROVIDED

CODE COMPLIANT PLANT SCHEDULE

QUAN.	BOTANICAL NAME	COMMON NAME	SIZE	NOTES
TREES AND LARGE EVERGREENS				
19	ACER RUBRUM 'OCTOBER GLORY'	OCTOBER GLORY RED MAPLE	2" CAL.	
19	AMELANCHIER SPP.	SERVICEBERRY	4-6'	SINGLE-STEM TREE FORM
22	CARYA TOMENTOSA *	MOCKERNUT HICKORY	2" CAL.	
12	ILEX VOMITORIA	YAUPON HOLLY	4-6'	
4	MAGNOLIA GRANDIFLORA 'BRACKEN'S BROWN BEAUTY' *	BRACKEN'S BROWN BEAUTY SOUTHERN MAGNOLIA	2" CAL.	MATCHING, FULL
4	MAGNOLIA GRANDIFLORA ' SOUTHERN CHARM' *	TEDDY BEAR MAGNOLIA	2" CAL.	MATCHING, FULL
7	MAGNOLIA VIRGINIANA	SWEETBAY MAGNOLIA	4-6'	
17	NYSSA SYLVATICA 'GREEN GABLE'	GREEN GABLE BLACK TUPELO	2" CAL.	
10	QUERCUS NUTTALLII 'HIGHPOINT' *	HIGHPOINT' NUTTALL OAK	2" CAL.	
41	QUERCUS VIRGINIANA*	LIVE OAK	2" CAL.	
SHRUBS				
88	CEPHALOTAXUS HARRINGTONIA 'DUKE GARDENS'	DUKE GARDEN YEW	3 GAL.	
450	ILEX VOMITORIA NANA	DWARF YAUPON HOLLY	3 GAL.	
70	MYRICA CERIFERA 'LITTLE BULL'	LITTLE BULL WAX MYRTLE	3-4'	
11	PITTOSPORUM TOBIRA	PITTOSPORUM	3-4'	

*REPLACEMENT TREES

40' 0' 20' 80'

SCALE: 1"=40'
(CHECK SCALE BEFORE USING)

©2022 LIGGETT DESIGN GROUP PLLC; ALL RIGHTS RESERVED.

LIGGETT DESIGN GROUP
LANDSCAPE ARCHITECTURE
SITE PLANNING & DESIGN
725-A PERSHING ROAD RALEIGH, NC 27608
PHONE 919.833.0303 FAX 919.833.1116
MAIL@LIGGETTDESIGNGROUP.COM

SURVEYOR:
JOHNSTON DESIGN GROUP
411 UNIVERSITY RIDGE: SUITE D
GREENVILLE, SC 29601

CONSULTANTS
PORT CITY CONSULTING ENGINEERS
6216 STONEBRIDGE RD. WILMINGTON NC
(910) 599-1744

SEALS/SIGNATURE
NORTH CAROLINA LICENSED LANDSCAPE ARCHITECTURAL FIRM C-150 LIGGETT DESIGN GROUP, PLLC
NORTH CAROLINA LICENSED LANDSCAPE ARCHITECT 1147 FRANK RAHM LIGGETT, IV

NOT APPROVED FOR CONSTRUCTION UNLESS SIGNED BY LANDSCAPE ARCHITECT

CLIENT

OAK GROVE COURTYARD
TRASK LAND COMPANY
1051 MILITARY CUTOFF RD, STE 210
WILMINGTON, NC 28405

ISSUED FOR:
SUBMITTAL

ISSUED DATE:
5/12/2022

REVISIONS:

NO.	ITEM	DATE

DRAWING TITLE:
PLANTING PLAN & CALCULATIONS

DRAWN BY: AS/RW/WAB
CHECKED BY: FL
SCALE: 1"=40'
SHEET NUMBER:

L-1
OF 2

PLANTING NOTES

1. Prior to the start of any excavation for the project, the contractor shall notify NC One Call or equivalent to locate all existing utilities.

2. Contractor shall maintain or provide positive drainage away from all building foundations, structures and within planting beds.

3. Contractor shall supply all plant materials in quantities sufficient to complete all plantings shown on this drawing. Clarify any discrepancies with the Landscape Architect prior to ordering plant material.

4. All plants shall meet or exceed the minimum standards set by the U.S.D.A. for Nursery Stock, sponsored by the American Association of Nurserymen, Inc., Washington, D.C.

5. All plants shall bear the same relationship to finished grade as to the original grades before digging. The Contractor shall revise grades at a minimum of +/- 1/2% to ensure smooth transitions between planting beds and lawn areas.

6. Mulch - install 3" of shredded pine bark mulch in plant beds around buildings, patio, etc., and 3" of clean pine straw in all other natural areas with new planting and on slopes, unless otherwise noted on plans.

7. All plant materials are subject to the approval of the Landscape Architect at the nursery and at the job site.

8. Contractor is encouraged to provide the Landscape Architect with concerns and/or suggestions regarding proposed plant materials, prior to placing a purchase order for plants.

9. Contractor is responsible for verifying all quantities. Drawings symbols shall rule over plant lists if there are discrepancies between the two.

10. All trees located adjacent to walks and drives shall have 6' of clearance height to first branching.

11. All trees shall be placed a minimum of 3' from sidewalks, curbs and hardscape, and a minimum of 6' from fire hydrants and other utilities, unless otherwise noted on plans.

12. All plants shall be installed as per generally accepted planting standards.

13. All dead and or diseased plants shall be replaced within warranty period at no charge to Owner/Client.

14. All plants and stakes shall be set plumb unless otherwise specified.

15. Refer to Existing Conditions Plan, Demo Plan and/or Planting Plan for trees/shrubs to be either removed or to remain undisturbed.

16. Landscape Architect shall select and layout all the perennial beds.

17. All planting bed edges to be smooth flowing arcs, unless otherwise specified. Bed edges shall be smooth, consistent, hand trenched 3 to 4 inches deep, and "V" shaped. All excavated material shall be removed from the bed edge and planting bed.

18. If the landscape contractor observes any deficiencies in the site conditions or which could negatively affect plant establishment, survival, or guarantee, notify the Owner and Landscape Architect prior to procurement and/or installation.

19. Any disturbed areas that are not planted or grassed as part of the landscape plan shall be restored to their previous existing condition (including raking uneven areas, seeding grassed areas and for natural areas spreading minimum 3" depth of pine straw, leaf litter or pine bark mulch per direction of Landscape Architect).

LANDSCAPE MAINTENANCE AGREEMENT

"The Owners of the Property and their Agents, Heirs or Assigns shall be responsible for the installation, preservation and maintenance of all plantings and physical features shown on this plan. The Owners shall be responsible for annual maintenance of the vegetation to include but not limited to":

1. a. Fertilization: Zeon Zoysia lawns: Fertilize lawns twice per year (March 30 - May 15), and again (June 30 - July 31) according to soil test. Tifway 419 Bermuda lawns: fertilize lawns twice per year (March 30 - May 15), and again (June 15 - August 15) according to soil test.

1. b. Fertilization: Deciduous trees, evergreen trees and evergreen shrubs: Fertilize trees and shrubs per soil test. A deep root fertilizer shall be used for deciduous trees, evergreen trees and evergreen shrubs and applied once per year (Feb. 28 - March 30). Fertilizer shall be watered in.

1. c. Fertilization: Shrubs, groundcover and seasonal plants not listed in a (2):Fertilize shrubs, groundcover and seasonal plants per soil test. A complete controlled release fertilizer shall be used for shrubs, groundcover and seasonal plants and applied (Feb. 28 - March 30), and again in (June 15 - July 31). Fertilizer shall be spread evenly under all plants (where applicable) and watered in. **(Planting areas with trees, shrubs, groundcover and seasonal plants may receive fertilization 2x/year due to the planting "arrangement", however, over-fertilization shall not be acceptable.

2. Pruning: Removal of dead or diseased wood, or removal of tree branches for sight distance/safety reasons; the Shigo standards should be adhered to. The pruning of shrubs shall be limited to the pruning necessary to maintain the natural shape of the plant except for sheared hedges and sheared upright evergreen trees.

3. Pest control: Pre-emergent weed control for lawns to be applied in Sept. - November. Tree, shrub and groundcover bed pre-emergent control to be applied in February. Chemical treatment for insect infestation and disease may be applied and shall be specific to the problem.

4. Mulching: Mulching shall be maintained at a depth of 2 - 3" in plant beds and tree saucers. As a minimum, mulch shall be reapplied at least every year during the months of February and March.

5. Mowing: Zoysia lawns shall be maintained at a height of 2" - 2½" and shall be mowed approximately 60 times per year. Tifway 419 Bermuda lawns shall be maintained at a height of 2" - 2½" and shall be mowed approximately 72 times per year. Grasses used for stabilization and ornamental use shall not be mowed.

6. Plant protection: Avoid excess intrusion into the root zone area of established plantings including equipment, vehicular and pedestrian traffic, construction activities and materials.

7. Watering: If an irrigation system is utilized, the system shall be regulated to provide approximately 1" of rainfall per week during the growing season.

8. Warranty: Remove/replace all dead and or diseased plant material at each maintenance visit.

PREPARATION AND INSTALLATION FOR PLANTING SOD AREAS

1. Provide soil ph testing, adjust the ph range of soils that are unacceptable per local cooperative extension service standards. Incorporate agricultural lime, fertilizer, and superphosphate uniformly at the rate specified per soil ph testing results.

2. Site to be fine graded before permanent planting and seeding or sodding is installed.

3. Soil shall be loosened to a depth of 4 -6 inches by disking, raking, roto-tilling or other acceptable means. Continue tillage until a well-pulverized, firm, reasonably uniform seedbed is prepared 4 to 6 inches deep. Chisel compacted areas and spread topsoil 3 inches deep over adverse soil conditions.

4. Rake and remove all loose rock (over 1" diameter), roots, and other obstructions leaving surface reasonably smooth. Contractor shall incorporate/till-in 50/50 soil amendment in all plant beds.

5. All sod and installation techniques shall adhere to turfgrass producers international guideline specifications, current edition.

6. Sod areas to be sodded with workable size rolls that are not broken or stretched. Sod shall be free of thatch. Sod shall be installed within 24 hours of arrival at the site.

7. Water 1 inch minimum within the first hour of sod or seed installation. Begin irrigation system during the following 3 days keeping the sodded or seeded area moist.

8. Sod shall be laid parallel to the contours and shall have staggered joints on slopes greater than 3:1 or in drainage swales sod shall be staked.

9. Apply starter fertilizer at time of sodding at rate recommended by manufacturer. Contractor is responsible for the initial watering.

10. Inspect all sodded areas and make necessary repairs or resod within the planting season, if possible. If grass stand should be over 60% damaged, Contractor shall consult with a conservation inspector on maintenance treatment and fertilization to determine the best type of treatment necessary in order to establish and maintain an acceptable stand of grass.

11. Contractor shall water and maintain all planting and NEWLY SOD areas until a maintenance contractor has been selected.

12. Once an acceptable stand of grass has been established (of 95% or better), the Contractor shall repair all damaged areas and monitor the NEWLY SOD areas until the grass reaches a height of 4 inches tall.

NOTES:
1. Mulch shall be 3" thick except at crown which shall be 1" thick.
2. Backfill shall consist of native broken-up topsoil. Total volume of backfill shall be amended with up to 1/3 pine bark mulch. Pine bark mulch pieces should be no larger than what passes through a 1" screen. If additional soil is required for backfill due to detrimental sub-soil, use soil similar to existing native soil. additional soil to be approved by grounds management.
3. contractor shall provide Gator Bags for trees not under irrigation.
4. Contractor shall install "Bio-Barrier" or equivalent where trees are planted within 10'-0" of pavement. Contractor shall install the barrier per the manufacturer's recommendations.
5. Contractor shall stake trees only if stabilization is necessary.
6. Contractor shall incorporate "PermaTill" in clay and other poorly drained soils in all planting beds. Contractor shall spread 2" thick of "PermaTill" over entire planting area and till into soil to a depth of 6-8".
7. Contractor shall set rootball of tree 2-3' above finished grade.

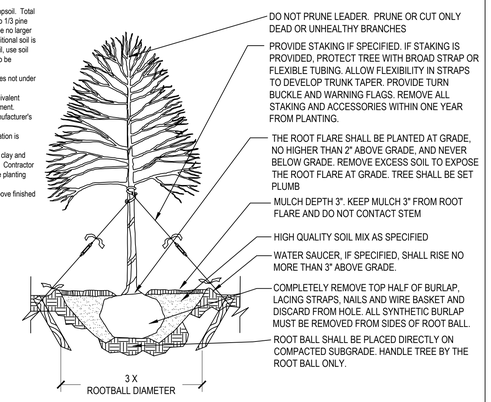

TREE

PLANTING DETAILS:

PLANTING DETAIL NOTES:

1. Mulch shall be 3" thick.
2. Backfill shall consist of native broken-up topsoil. Total volume of backfill shall be amended with up to 1/3 pine bark mulch. Pine bark mulch pieces should be no larger than what passes through a 1" screen. If additional soil is required for backfill due to detrimental sub-soil, use soil similar to existing native soil. additional soil to be approved by grounds management.
3. Contractor shall incorporate "PermaTill" in clay and other poorly drained soils in all planting beds. Contractor shall spread 2" thick of "PermaTill" over entire planting area and till into soil to a depth of 6-8".

SHRUB

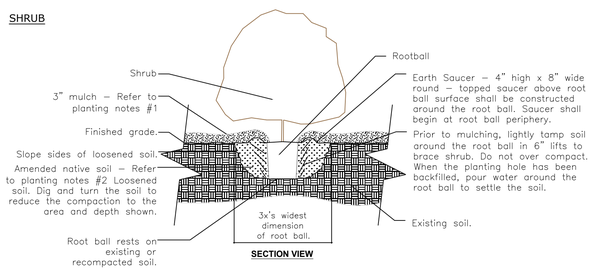

SECTION VIEW

NOT TO SCALE

LIGGETT DESIGN GROUP
LANDSCAPE ARCHITECTURE
SITE PLANNING & DESIGN
725-A PERSHING ROAD RALEIGH, NC 27608
PHONE 919.833.0303 FAX 919.833.1116
MAIL@LIGGETTDESIGNGROUP.COM

SURVEYOR:
JOHNSTON DESIGN GROUP
411 UNIVERSITY RIDGE- SUITE D
GREENVILLE, SC 29601

CONSULTANTS
PORT CITY CONSULTING ENGINEERS
6216 STONEBRIDGE RD. WILMINGTON NC
(910) 599-1744

SEALS/SIGNATURE

NORTH CAROLINA LICENSED LANDSCAPE ARCHITECTURAL CORPORATION C-150 LIGGETT DESIGN GROUP, PLLC WILMINGTON

NORTH CAROLINA REGISTERED LANDSCAPE ARCHITECT 1147 FRANK RAHM LIGGETT, IV

NOT APPROVED FOR CONSTRUCTION UNLESS SIGNED BY LANDSCAPE ARCHITECT

CLIENT

OAK GROVE COURTYARD
TRASK LAND COMPANY
1051 MILITARY CUTOFF RD, STE 210
WILMINGTON, NC 28405

ISSUED FOR:
SUBMITTAL

ISSUED DATE:
5/12/2022

REVISIONS:

NO.	ITEM	DATE

DRAWING TITLE:
PLANTING NOTES & DETAILS

DRAWN BY: AS/RW/WAB
CHECKED BY: FL
SCALE: 1"=40'
SHEET NUMBER:
L-2
OF 2

© 2022 LIGGETT DESIGN GROUP PLLC; ALL RIGHTS RESERVED