PRELIMINARY PLAT

FOR

PECAN GROVE PLANTATION PHASE 6

PENDER COUNTY, NORTH CAROLINA

MAY 2018

VICINITY MAP

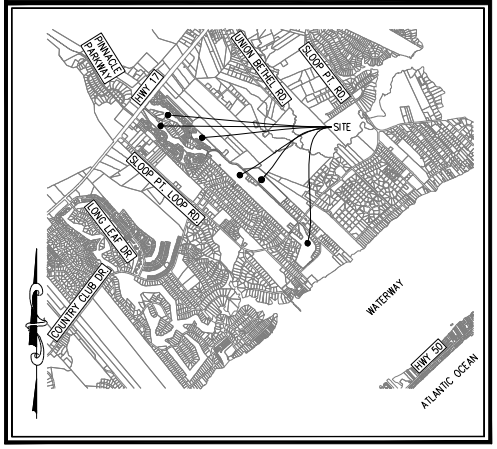

VICINITY MAP
(NTS)

LEGEND

DESCRIPTION	EXISTING	PROPOSED
1' CONTOUR INTERVAL		
5' CONTOUR INTERVAL		
PROPERTY LINE		
ROADWAY CENTERLINE		
RIGHT OF WAY LIMITS		
EASEMENT LINE		
CURB & GUTTER		
SANITARY SEWER FACILITIES		
STORM SEWER FACILITIES		
WATERLINE		
FIRE HYDRANT ASSEMBLY		
WATERWAYS		N/A

	PROPOSED
PROPOSED LOT AND S.F.	X 5,000 s.f.
OPEN SPACE LABEL	Ⓐ
OPEN SPACE	
BUILDING SET BACKS	
PRIVATE SANITARY SET BACKS	

STREET SIGN
404 WETLANDS
FLOW DIRECTION

DEVELOPER/OWNER

Signature Westbrook NC, Ltd.
9337B Katy Freeway #377
Houston, Texas 77024
PHONE: (713) 822-3891

PREPARED BY:

GSP CONSULTING, PLLC

ENGINEERING

6626 Gordon Road, Unit C, Wilmington, North Carolina 28411 tel: 910-442-7870 fax: 910-799-6659 License # P-0718

CERTIFICATE OF PRELIMINARY PLAT APPROVAL

PRELIMINARY PLAT APPROVED BY PENDER COUNTY FOR A PERIOD OF TWO (2) YEARS SUBJECT TO THE PENDER COUNTY UNIFIED DEVELOPMENT ORDINANCE REQUIREMENTS AND CONDITIONS OF APPROVAL.

PLANNING STAFF _____ DATE _____

CERTIFICATION OF SUBDIVISION

A COPY OF THIS PLAT HAS BEEN SUBMITTED. APPROVAL IS SUBJECT TO REVIEW; THIS DOES NOT CONSTITUTE APPROVAL.

PENDER COUNTY UTILITIES: _____ DATE: _____
PENDER COUNTY ENVIRONMENTAL HEALTH: _____ DATE: _____
PENDER COUNTY ADDRESSING COORDINATOR: _____ DATE: _____

INDEX OF SHEETS

SHT C-0	COVER SHEET
SHT C-1	GENERAL NOTES
SHT C-2	EXISTING CONDITIONS PLAN
SHT C-3.1-3.4	SITE PLAN
SHT C-4.1-4.4	UTILITY PLAN
SHT C-5.1-5.4	DRAINAGE PLAN
SHT C-6.1-6.4	INFILTRATION BASIN DETAILS
SHT C-7	STANDARD DETAILS
SHT C-8	STANDARD DETAILS
SHT C-9	UTILITY DETAILS
SHT C-10	UTILITY DETAILS

SITE DATA TABLE

GENERAL NOTES:

1. PENDER COUNTY PARCEL NO.: PIN 4214-12-8251-0000
2. TOTAL TRACT AREA: 75.97 AC.±
3. ZONING: RESIDENTIAL PERFORMANCE (RP)
4. THIS PROPERTY IS WITHIN A SPECIAL FLOOD HAZARD ZONE PER FEMA FLOOD INSURANCE RATE MAP #3720421400J, EFFECTIVE DATE 2/16/2007.
5. THIS PROPERTY DOES NOT CONTAIN ANY A.E.C. AREAS OR IS UNDER CAMA JURISDICTION.
6. THIS PROPERTY DOES CONTAIN 404 FEDERAL WETLANDS.

GENERAL NOTES:

1. OWNERSHIP REFERENCE: M.B. 63 P.G. 98
2. PROPERTY IS LOCATED IN PENDER COUNTY AND IS ZONED RESIDENTIAL PERFORMANCE (RP).
3. A HOME OWNERS ASSOCIATION WILL BE FORMED TO GUARANTEE CONTINUAL MAINTENANCE OF THE COMMON AREAS AND OPEN SPACE.
4. ALL INTERIOR ROADWAYS ARE TO BE BUILT TO NCDOT SUBDIVISION ROADS MINIMUM CONSTRUCTION STANDARDS.
5. INTERIOR ROADWAYS FOR THIS PROJECT ARE TO BE PRIVATE.
6. A HOME OWNERS ASSOCIATION WILL BE FORMED PRIOR TO THE SALE OF ANY LOTS AND MEMBERSHIP WILL BE AUTOMATIC UPON PURCHASE.
7. THE DEVELOPERS HAVE THE SOLE RIGHT TO MODIFY THIS PRELIMINARY PLAN IN ACCORDANCE WITH MARKET CONDITIONS OR OTHER CONDITIONS WHICH INDICATE A CHANGE IS DESIRED OR REQUIRED. ANY AND ALL CHANGES MUST BE REVIEWED BY THE PLANNING DEPARTMENT AND IN SOME INSTANCES MAY REQUIRE PLANNING BOARD APPROVAL.
8. BUFFERS WILL BE PROVIDED PER CURRENT PENDER COUNTY ZONING ORDINANCE.
11. WETLANDS IMPACTED WILL BE MITIGATED IN ACCORDANCE WITH ANY REQUIREMENTS OF APPLICABLE STATE AND FEDERAL PERMITS.
12. ALL LOTS SHALL MEET CURRENT PENDER COUNTY UNIFIED DEVELOPMENT ORDINANCE REGULATIONS.
13. ALL PROPOSED OPENSPACE/RECREATION AREAS ARE NON-BUILDABLE FOR ANY TYPE OF DEVELOPMENT EXCEPT AS RECREATIONAL FACILITIES.

TRIP GENERATION:
63 SINGLE FAMILY HOMES*:
603 - TOTAL DAILY TRIPS
47 - AM PEAK HOUR
64 - PM PEAK HOUR
*PER ITE TRIP GENERATION MANUAL 8TH EDITION, ITE CODE 210

REQUIRED OPEN SPACE:
63 LOTS * 0.03 AC/LOT = 1.89 AC±

PROVIDED OPEN SPACE
21.98 AC± TOTAL OPEN SPACE PROVIDED
NOTE: PROPOSED OPENSPACE/RECREATION SPACE AREAS ARE NOT FOR BUILDING OR STRUCTURAL DEVELOPMENT

DEVELOPMENT DATA:
PROJECT AREA: 75.97 AC.±
AVERAGE LOT SIZE - 33,275 SF
AREA OF LOTS PROPOSED - 2,096,323 SF = 48.12 AC±
AREA OF ROW PROPOSED - 233,737 SF = 5.37 AC±
TOTAL PROPOSED ROAD LENGTH - 5,145 L.F.±

PROPOSED BUA

LOTS -	441,000 S.F.
ROADS -	156,550 S.F.
SIDEWALKS -	42,651 S.F.
TOTAL -	640,201 S.F. (19.3%)

DEVELOPMENT DATA:

TOTAL TRACT AREA =	75.97 AC
NON-RESIDENTIAL ACREAGE =	0.00 AC
WETLAND ACREAGE =	17.06 AC
RIGHT OF WAY ACREAGE =	5.37 AC
OPEN SPACE ACREAGE =	21.98 AC
ACTIVE =	4.92 AC
PASSIVE =	17.06 AC
TOTAL UNITS =	63
DEVELOPABLE LAND =	48.63 AC
NET DENSITY =	1.30 UNITS/AC

DEVELOPMENT NOTES:
1. ALL DEVELOPMENT SHALL BE IN ACCORDANCE WITH THE PENDER COUNTY UNIFIED DEVELOPMENT ORDINANCE.
2. PROJECT SHALL COMPLY WITH ALL CITY, STATE & FEDERAL REGULATIONS.

NOTE:
ALL DESIGN AND CONSTRUCTION SHALL BE IN CONFORMANCE WITH THE PENDER COUNTY UNIFIED DEVELOPMENT ORDINANCE & THE STATE OF NORTH CAROLINA

NORTH CAROLINA PROFESSIONAL SEAL 031315 ENGINEER GARRY S. PAGE
05/13/2019

PROJECT NAME: PECAN GROVE PLANTATION PHASE 6
GSP CONSULTING PROJECT #: 2019-0005

COORDINATION NOTES

1. THE CONTRACTOR IS REQUIRED TO OBTAIN ANY/ALL PERMITS REQUIRED FOR CONSTRUCTION OF THESE PLANS.
2. ALL WORK IS TO BE IN ACCORDANCE WITH PENDER COUNTY AND THE STATE OF NORTH CAROLINA.

3. THE CONTRACTOR IS TO ESTABLISH AND CHECK ALL HORIZONTAL AND VERTICAL CONTROLS TO BE USED WITH THE PROJECT. IN ADDITION, THE CONTRACTOR IS TO COMPUTE THE LAYOUT OF THE ENTIRE SITE PLAN IN ADVANCE OF BEGINNING ANY WORK ASSOCIATED WITH THE SUBJECT PLANS. CONTRACTOR SHALL EMPLOY A PROFESSIONAL SURVEYOR TO PERFORM SITE IMPROVEMENT STAKEOUT(S).

4. ANYTIME WORK IS PERFORMED OFF-SITE OR WITHIN AN EXISTING EASEMENT, THE CONTRACTOR IS TO NOTIFY THE HOLDER OF SAID EASEMENT AS TO THE NATURE OF PROPOSED WORK, AND TO FOLLOW ANY GUIDELINES OR STANDARDS WHICH ARE ASSOCIATED WITH OR REFERENCED IN THE RECORDED EASEMENT.

GENERAL NOTES:

1. EXISTING TOPOGRAPHY, BOUNDARY AND UTILITIES, HAVE BEEN PREPARED BY FIELD SURVEYS BY ATLANTIC COAST SURVEY, PLLC (P-0822) AND OTHER AVAILABLE INFORMATION.
2. REASONABLE CARE HAS BEEN EXERCISED IN SHOWING THE LOCATION OF EXISTING UTILITIES ON THE PLANS. THE EXACT LOCATION OF ALL EXISTING UTILITIES IS NOT KNOWN IN ALL CASES. THE CONTRACTOR SHALL EXPLORE THE AREA AHEAD OF DITCHING OPERATIONS BY OBSERVATIONS, ELECTRONIC DEVICES, HAND DIGGING AND BY PERSONAL CONTACT WITH THE UTILITY COMPANIES. IN ORDER TO LOCATE EXISTING UTILITIES IN ADVANCE OF TRENCHING OPERATIONS SO AS TO ELIMINATE OR MINIMIZE DAMAGE TO EXISTING UTILITIES. THE CONTRACTOR SHALL BE RESPONSIBLE FOR ALL COSTS RESULTING FROM ANY DAMAGE TO THE EXISTING UTILITY LINES INCLUDING LOSS OF UTILITY REVENUES. CONTRACTOR SHALL ARRANGE FOR TEMPORARY SUPPORT OF EXISTING UTILITIES, SUCH AS POLES, CONDUITS, FIBER OPTIC CABLES, TELEPHONE CABLES, WATER LINES, ETC...
3. CONTRACTOR SHALL COMPLY WITH THE LATEST REVISIONS AND INTERPRETATIONS OF THE DEPARTMENT OF LABOR SAFETY AND HEALTH REGULATIONS FOR CONSTRUCTION PROMULGATED UNDER THE OCCUPATIONAL SAFETY AND HEALTH ACT.
4. CONTRACTOR SHALL PLAN AND CONSTRUCT WORK SO AS TO CAUSE MINIMUM INCONVENIENCE TO THE OWNER AND THE PUBLIC. THE CONTRACTOR SHALL PROVIDE, ERECT AND MAINTAIN AT ALL TIMES DURING THE PROGRESS OR TEMPORARY SUSPENSION OF WORK, SUITABLE BARRIERS, FENCES, SIGNS OR OTHER ADEQUATE PROTECTION, INCLUDING FLAGMEN AND WATCHMEN AS NECESSARY TO INSURE THE SAFETY OF THE PUBLIC AS WELL AS THOSE ENGAGED IN THE CONSTRUCTION WORK. CONSTRUCTION SIGNING SHALL BE IN ACCORDANCE WITH THE LATEST EDITION OF "CONSTRUCTION AND MAINTENANCE OPERATIONS SUPPLEMENT TO THE MANUAL ON UNIFORM TRAFFIC CONTROL DEVICES" BY THE DOT.
5. ALL MATERIAL CLEARED OR DEMOLISHED BY THE CONTRACTOR IN ORDER TO CONSTRUCT THE WORK SHALL BECOME THE PROPERTY OF THE CONTRACTOR AND SHALL BE PROPERLY DISPOSED OF OFF-SITE.
6. ALL WORK BY THE CONTRACTOR SHALL BE WARRANTED BY THE CONTRACTOR FOR A PERIOD OF ONE YEAR AFTER THE OWNER ACCEPTS THE WORK.
7. CONTRACTOR SHALL CALL THE NORTH CAROLINA ONE-CALL CENTER AT 1 (800) 632-4949 AND ALLOW THE CENTER TO LOCATE EXISTING UTILITIES BEFORE DIGGING.
8. CONTRACTOR SHALL REMOVE ASPHALT, AGGREGATE BASE COURSE, AND CONCRETE CURB & GUTTER WITHIN LIMITS OF DEMOLITION AS SHOWN ON PLAN.

DEMOLITION NOTES

1. CONTRACTOR TO COORDINATE WITH THE OWNER TO PROPERLY MAINTAIN OR RELOCATE EXISTING SERVICE CONNECTIONS WHEN NECESSARY
2. CONTRACTOR IS TO WALK THE SITE AND BECOME FAMILIAR WITH THE SCOPE OF DEMOLITION REQUIRED. ALL DEMOLITION WORK REQUIRED TO CONSTRUCT NEW SITE IMPROVEMENTS WILL BE PERFORMED BY THE CONTRACTOR AND WILL BE UNCLASSIFIED EXCAVATION.
3. DEMOLITION SHALL INCLUDE BUT IS NOT LIMITED TO THE EXCAVATION, HAULING AND OFFSITE DISPOSAL OF CONCRETE PADS, CONCRETE DITCHES, FOUNDATIONS, SLABS, STEPS, AND STRUCTURES; ABANDONED UTILITIES, BUILDINGS, PAVEMENTS AND ALL MATERIALS CLEARED AND STRIPPED TO THE EXTENT NECESSARY AS DIRECTED BY THE SOILS ENGINEER FOR THE INSTALLATION OF THE NEW IMPROVEMENTS AND WITHIN THE LIMITS OF CLEARING AND GRADING AND AS SHOWN ON THESE PLANS.
4. THE CONTRACTOR SHALL PROTECT ALL ADJACENT PROPERTY, STRUCTURES AND UTILITIES ON THE PROPERTY NOT TO BE DEMOLISHED. DAMAGE TO PROPERTIES OF OTHERS DUE TO THE CONTRACTOR'S ACTIVITIES SHALL BE REPLACED IN KIND BY THE CONTRACTOR AT NO COST TO OWNER.
5. ELECTRIC, TELEPHONE, SANITARY SEWER, WATER AND STORM SEWER UTILITIES THAT SERVICE OFF-SITE PROPERTIES SHALL BE MAINTAINED DURING THE CONSTRUCTION PROCESS BY THE CONTRACTOR.
6. EXISTING UTILITIES NOT INTENDED FOR DEMOLITION SHALL BE MAINTAINED, PROTECTED AND UNDISTURBED DURING DEMOLITION
7. ALL EXISTING IMPROVEMENTS INDICATED OR REQUIRED TO BE DEMOLISHED SHALL INCLUDE REMOVAL FROM THE PROPERTY AND PROPER DISPOSAL.
8. CONTRACTOR SHALL COORDINATE RELOCATION OF ALL EXISTING OVER HEAD AND UNDERGROUND UTILITIES INCLUDING CABLE, GAS, TELEPHONE AND ELECTRIC AND ANY OTHER UTILITIES THROUGH THE SITE WITH THE RESPECTIVE COMPANIES.
9. PROVIDE SMOOTH SAW CUT OF EXISTING PAVEMENTS, CURBS AND GUTTERS AND SIDEWALKS TO BE DEMOLISHED.
10. ALL DEMOLITION WORK SHALL BE DONE IN STRICT ACCORDANCE WITH LOCAL, STATE AND FEDERAL REGULATIONS AS WELL AS OSHA REGULATIONS.
11. INFORMATION CONCERNING UNDERGROUND UTILITIES WAS OBTAINED FROM AVAILABLE RECORDS, BUT THE THE CONTRACTOR MUST DETERMINE THE EXACT LOCATION AND ELEVATIONS OF THE MAINS BY DIGGING TEST PITS BY HAND.

EROSION AND SEDIMENT CONTROL NOTES

GENERAL NOTES:

1. CLEAR AND REMOVE FROM SITE ALL TREES, ROOTS, ROOT MAT, ETC. FROM THE AREA WITHIN DESIGNATED CLEARING LIMITS.
2. PLANT GRASS OVER ALL GRADED AREAS AS SHOWN IN THE TABLE ON THIS SHEET OF CEASE OF ANY GRADING ACTIVITY.
3. CONTRACTOR SHALL BE RESPONSIBLE FOR CLEANING AND RESTORING TO PRE-CONSTRUCTION CONDITIONS ANY AREAS OUTSIDE THE PROJECT LIMITS THAT MAY INADVERTENTLY BE DAMAGED DUE TO THE FAILURE OF THE EROSION MEASURES
4. DURING GRADING AND AFTER GRADING HAS BEEN COMPLETED, CONTRACTOR SHALL CONTINUE TO MAINTAIN PERMANENT AND TEMPORARY EROSION CONTROL MEASURES UNTIL FINAL INSPECTION AND APPROVAL BY THE NCDENR DIVISION OF LAND QUALITY.
5. WATER, FERTILIZE, MOW AND MAINTAIN SPRIGGED, SODDED AND PLANTED AREAS UNTIL FINAL APPROVAL BY THE NCDENR DIVISION OF LAND QUALITY.
6. ANY BORROW MATERIAL BROUGHT ONTO SITE MUST BE FROM A LEGALLY OPERATED MINE OR OTHER APPROVED SOURCE.
7. ANY EXCESS MATERIAL REMOVED FROM SITE MUST BE HAULED TO A LEGALLY OPERATED MINE OR OTHER APPROVED SOURCE.

MAINTENANCE PLAN

1. ALL EROSION AND SEDIMENT CONTROL PRACTICES WILL BE CHECKED FOR STABILITY AND OPERATION FOLLOWING EVERY RUNOFF-PRODUCING RAINFALL BUT IN NO CASE LESS THAN ONCE EVERY WEEK. ANY NEEDED REPAIRS WILL BE MADE IMMEDIATELY TO MAINTAIN ALL PRACTICES AS DESIGNED.
2. ALL CONSTRUCTION ENTRANCES WILL BE PERIODICALLY TOP DRESSED WITH AN ADDITIONAL 2 INCHES OF #4 STONE TO MAINTAIN PROPER DEPTH. ANY SEDIMENT THAT IS TRACKED INTO THE STREET WILL BE IMMEDIATELY REMOVED.
3. SEDIMENT WILL BE REMOVED BEHIND THE SEDIMENT FENCE WHEN IT BECOMES 0.5 FEET DEEP AT THE FENCE. THE SEDIMENT FENCE WILL BE REPAIRED AS NECESSARY TO MAINTAIN A BARRIER. SILT FENCE STAKES WILL BE SPACED 6 FEET APART UNLESS A WIRE BACKING IS USED WITH 8 FOOT STAKE SPACING.
4. INSPECT INLET PROTECTION AT LEAST WEEKLY AND AFTER EACH SIGNIFICANT (1/2 INCH OR GREATER) RAINFALL EVENT. CLEAR THE MESH WIRE OF ANY DEBRIS OR OTHER OBJECTS TO PROVIDE ADEQUATE FLOW FOR SUBSEQUENT RAINS. TAKE CARE NOT TO DAMAGE OR UNDERCUT THE WIRE MESH DURING SEDIMENT REMOVAL. REPLACE STONE AS NEEDED.
5. ALL SEEDED AREAS WILL BE FERTILIZED, RESEEDED AS NECESSARY, AND MULCHED ACCORDING TO SPECIFICATIONS IN THE VEGETATIVE PLAN TO MAINTAIN A VIGOROUS, DENSE VEGETATIVE COVER.
6. INSPECT SKIMMER SEDIMENT BASINS AT LEAST WEEKLY AND AFTER EACH SIGNIFICANT (ONE-HALF INCH OR GREATER) RAINFALL EVENT AND REPAIR IMMEDIATELY. REMOVE SEDIMENT AND RESTORE THE BASIN TO ITS ORIGINAL DIMENSIONS WHEN SEDIMENT ACCUMULATES TO ONE-HALF THE DESIGN DEPTH. PULL THE SKIMMER TO ONE SIDE SO THAT THE SEDIMENT UNDERNEATH IT CAN BE EXCAVATED. EXCAVATE THE SEDIMENT FROM THE ENTIRE BASIN, NOT JUST AROUND THE SKIMMER OR THE FIRST CELL. MAKE SURE VEGETATION GROWING IN THE BOTTOM OF THE BASIN DOES NOT HOLD DOWN THE SKIMMER.

   IF THE SKIMMER IS CLOGGED WITH TRASH AND THERE IS WATER IN THE BASIN, USUALLY JERKING ON THE ROPE WILL MAKE THE SKIMMER BOB UP AND DOWN AND DISLODGE THE DEBRIS AND RESTORE FLOW. IF THIS DOES NOT WORK, PULL THE SKIMMER OVER TO THE SIDE OF THE BASIN AND REMOVE THE DEBRIS.

   IF THE SKIMMER ARM OR BARREL PIPE IS CLOGGED, THE ORIFICE CAN BE REMOVED AND THE OBSTRUCTION CLEARED WITH A PLUMBER'S SNAKE OR BY FLUSHING WITH WATER. BE SURE AND REPLACE THE ORIFICE BEFORE REPOSITIONING THE SKIMMER.

   CHECK THE FABRIC LINED SPILLWAY FOR DAMAGE AND MAKE ANY REQUIRED REPAIRS WITH FABRIC THAT SPANS THE FULL WIDTH OF THE SPILLWAY. CHECK THE EMBANKMENT, SPILLWAYS, AND OUTLET FOR EROSION DAMAGE, AND INSPECT THE EMBANKMENT FOR PIPING AND SETTLEMENT. MAKE ALL NECESSARY REPAIRS IMMEDIATELY. REMOVE ALL TRASH AND OTHER DEBRIS FROM THE SKIMMER AND POOL AREAS.

   FREEZING WEATHER CAN RESULT IN ICE FORMING IN THE BASIN. SOME SPECIAL PRECAUTIONS SHOULD BE TAKEN IN THE WINTER TO PREVENT THE SKIMMER FROM PLUGGING WITH ICE.

STABILIZATION NOTES

1. ALL DISTURBED AREAS WILL BE STABILIZED WITHIN 15 WORKING DAYS OF CEASE OF ANY PHASE OF ACTIVITY AND SLOPES WITHIN 21 CALENDAR DAYS.

PERMANENT SEEDING SCHEDULE – MIXTURE 5CP

SPECIES	RATE (LB/ACRE)
CENTIPEDE GRASS	10-20

Seeding Dates
MARCH – JUNE

Soil Amendments
APPLY LIME AND FERTILIZER ACCORDING TO SOIL TESTS, OR APPLY 300 LB/ACRE 10-10-10 FERTILIZER.

Mulch
DO NOT MULCH.

Maintenance
FERTILIZE VERY SPARINGLY LB/ACRE NITROGEN IN SPRING WITH NO PHOSPHORUS. CENTIPEDE GRASS CANNOT TOLERATE HIGH PH OR EXCESS FERTILIZER.

TEMPORARY SEEDING–LATE WINTER/EARLY SPRING

WINTER AND EARLY SPRING

SPECIES	RATE (LB/ACRE)
Rye (GRAIN)	120
*ANNUAL LESPEDEZA (KOBE IN PIEDMONT AND COASTAL PLAIN, KOREAN IN MOUNTAINS)	50

*OMIT ANNUAL LESPEDEZA WHEN DURATION OF TEMPORARY COVER IS NOT TO EXTEND BEYOND JUNE.

SUMMER

SPECIES	RATE (LB/ACRE)
GERMAN MILLET	40

FALL

SPECIES	RATE (LB/ACRE)
RYE (GRAIN)	120

Seeding dates
COASTAL PLAIN – DEC.1-APR. 15 – LATE WINTER AND EARLY SPRING
APRIL 15 – AUG. 15 – SUMMER
AUG. 15 – DEC. 30 – FALL

Soil amendments
FOLLOW RECOMMENDATIONS OF SOIL TESTS OR APPLY 2,000 LB/ACRE GROUND AGRICULTURAL LIMESTONE AND 750 LB/ACRE 10-10-10 FERTILIZER.

Mulch
APPLY 4,000 LB/ACRE STRAW. ANCHOR STRAW BY TACKING WITH ASPHALT, NETTING OR A MULCH ANCHORING TOOL. A DISK WITH BLADES SET NEARLY STRAIGHT CAN BE USED AS A MULCH ANCHORING TOOL.

Maintenance
REFERTILIZE IF GROWTH IS NOT FULLY ADEQUATE. RESEED, REFERTILIZE AND MULCH IMMEDIATELY FOLLOWING EROSION OR OTHER DAMAGE.

GENERAL GRADING NOTES

1. REASONABLE CARE HAS BEEN EXERCISED IN SHOWING THE LOCATION OF EXISTING UTILITIES ON THE PLANS. THE EXACT LOCATION OF SUCH UTILITIES IS NOT KNOWN IN ALL CASES. THE CONTRACTOR SHALL EXPLORE THE AREA AHEAD OF THE DITCHING OPERATION BY OBSERVATIONS, ELECTRONIC DEVICES, HAND DIGGING AND BY PERSONAL CONTACT WITH THE UTILITY COMPANIES IN ORDER TO LOCATE EXISTING UTILITIES IN ADVANCE OF THE TRENCHING OPERATIONS SO AS TO AVOID AND PREVENT DAMAGE TO THE EXISTING UTILITIES. CONTRACTOR SHALL BE RESPONSIBLE FOR ALL COST RESULTING FROM ANY DAMAGE TO THE EXISTING UTILITY LINES INCLUDING BUT NOT LIMITED TO REPAIRS AND LOSS SERVICE REVENUE. CONTRACTOR SHALL ARRANGE FOR TEMPORARY SUPPORT OF EXISTING UTILITIES, SUCH AS POLES, CONDUITS, FIBER OPTIC CABLES, TELEPHONE CABLES, WATER LINES, ETC...
2. CONTRACTOR SHALL COMPLY WITH THE LATEST REVISIONS AND INTERPRETATIONS OF THE DEPARTMENT OF LABOR SAFETY AND HEALTH REGULATIONS FOR CONSTRUCTION PROMULGATED UNDER THE OCCUPATIONAL SAFETY AND HEALTH ACT.
3. CONTRACTOR SHALL PLAN AND CONSTRUCT WORK SO AS TO CAUSE MINIMUM INCONVENIENCE TO THE OWNER AND THE PUBLIC. THE CONTRACTOR SHALL PROVIDE, ERECT AND MAINTAIN AT ALL TIMES DURING THE PROGRESS OR TEMPORARY SUSPENSION OF WORK, SUITABLE BARRIERS, FENCES, SIGNS OR OTHER ADEQUATE PROTECTION, INCLUDING FLAG MEN AND WATCHMEN AS NECESSARY TO INSURE THE SAFETY OF THE PUBLIC AS WELL AS THOSE ENGAGED IN THE CONSTRUCTION WORK. CONSTRUCTION SIGNING SHALL BE IN ACCORDANCE WITH THE LATEST EDITION OF "CONSTRUCTION AND MAINTENANCE OPERATIONS SUPPLEMENT TO THE MANUAL ON UNIFORM TRAFFIC CONTROL DEVICES" BY THE NCDOT.
4. ALL MATERIAL CLEARED AND GRUBBED BY THE CONTRACTOR IN ORDER TO CONSTRUCT THE WORK, SUCH AS TREES, VEGETATION, FENCING, ETC... SHALL BECOME THE PROPERTY OF THE CONTRACTOR AND SHALL BE PROPERLY DISPOSED OF OFF-SITE OR BURNED IF PROPER PERMITS ARE RECEIVED.

SITE NOTES

1. ANY DISCREPANCY IN THIS PLAN AND ACTUAL FIELD CONDITIONS SHALL BE REPORTED TO THE OWNER PRIOR TO START OF CONSTRUCTION. GENERAL CONTRACTOR SHALL BE RESPONSIBLE FOR VERIFICATION OF ALL SETBACKS, EASEMENTS AND DIMENSIONS SHOWN HEREON BEFORE BEGINNING CONSTRUCTION.
2. THE GENERAL CONTRACTOR SHALL CONTACT ALL OWNERS OF EASEMENTS, UTILITIES AND R.O.W.'S PUBLIC OR PRIVATE, PRIOR TO WORKING IN THESE AREAS.
3. CONTRACTOR SHALL MAINTAIN THE SITE IN A MANNER SO THAT WORKMEN AND PUBLIC SHALL BE PROTECTED FROM INJURY, AND ADJOINING PROPERTY PROTECTED FROM DAMAGE.
4. ACCESS TO UTILITIES, FIRE HYDRANTS, STREET LIGHTING, ETC., SHALL REMAIN UNDISTURBED, UNLESS COORDINATED WITH THE RESPECTIVE UTILITY.
5. DO NOT SCALE THIS DRAWING AS IT IS A REPRODUCTION AND SUBJECT TO DISTORTION.
6. THE GENERAL CONTRACTOR SHALL REMOVE ALL DEBRIS FROM THE SITE UPON COMPLETION OF THE PROJECT AND AT LEAST ONCE A WEEK DURING CONSTRUCTION.
7. THE GENERAL CONTRACTOR SHALL KEEP THE AREA OUTSIDE THE "CONSTRUCTION LIMITS" BROOM CLEAN AT ALL TIMES.
8. CONTRACTOR SHALL MAINTAIN AN "AS-BUILT" SET OF DRAWINGS TO RECORD THE EXACT LOCATION OF ALL PIPING PRIOR TO CONCEALMENT. DRAWINGS SHALL BE GIVEN TO THE OWNER UPON COMPLETION OF THE PROJECT WITH A COPY OF THE TRANSMITTAL LETTER TO THE ENGINEER.
9. IF DEPARTURES FROM THE SPECIFICATIONS OR DRAWINGS ARE DEEMED NECESSARY BY THE CONTRACTOR, DETAILS OF SUCH DEPARTURES AND REASONS THEREOF SHALL BE GIVEN TO THE OWNER FOR REVIEW. NO DEPARTURES FROM THE CONTRACT DOCUMENT SHALL BE MADE WITHOUT THE PERMISSION OF THE OWNER.
10. CONTRACTOR SHALL VERIFY LOCATION AND ELEVATION OF ALL UNDERGROUND UTILITIES. THE LOCATION OF ALL EXISTING UTILITIES ARE NOT NECESSARILY SHOWN ON PLANS AND WHERE SHOWN ARE ONLY APPROXIMATE. THE CONTRACTOR SHALL ON HIS INITIATIVE AND AT NO EXTRA COST HAVE LOCATED ALL UNDERGROUND LINES AND STRUCTURES AS NECESSARY. NO CLAIMS FOR DAMAGES OR EXTRA COMPENSATION SHALL ACCRUE TO THE CONTRACTOR FROM THE PRESENCE OF SUCH PIPE OTHER OBSTRUCTIONS OR FROM DELAY DUE TO REMOVAL OR REARRANGEMENT OF THE SAME. THE CONTRACTOR SHALL BE RESPONSIBLE FOR ANY DAMAGE TO UNDERGROUND STRUCTURES. CONTACT NORTH CAROLINA ONE CALL" TOLL FREE 1-800-632-4949 AT LEAST 48 HOURS PRIOR TO CONSTRUCTION. THE CONTRACTOR IS RESPONSIBLE FOR CONTACTING ALL NONSUBSCRIBING UTILITIES.
11. ALL PERMITS RELATIVE TO PROJECT MUST BE OBTAINED, PRIOR TO CONSTRUCTION
12. ALL CONSTRUCTION TO BE IN ACCORDANCE WITH PERMITS ISSUED AND APPLICABLE STATE, COUNTY, AND LOCAL CODES.
13. FOR BUILDING DIMENSIONS, SEE ARCHITECTURAL DRAWINGS.
14. ALL DIMENSIONS AND RADII ARE TO OUTSIDE FACE OF BUILDING OR TO FACE OF CURB UNLESS OTHERWISE NOTED.
15. THE CONTRACTOR SHALL OBTAIN AND PAY FOR ALL INSPECTIONS, CERTIFICATIONS, EQUIPMENT, ETC., THAT MAY BE REQUIRED.
16. THE ENGINEER AND/OR OWNER DISCLAIM ANY ROLE IN THE CONSTRUCTION MEANS AND METHODS ASSOCIATED WITH THE PROJECT AS SET FORTH IN THESE PLANS.

GENERAL STORM SEWER NOTES

1. ALL STORM SEWERS SHALL BE CONSTRUCTED IN ACCORDANCE WITH PENDER COUNTY AND THE STATE OF NORTH CAROLINA REQUIREMENTS AS SPECIFIED ON THE DRAWINGS AND IN THE PROJECT SPECIFICATIONS.
2. BEDDING FOR ALL STORM SEWER PIPE SHALL BE AS SPECIFIED ON THE DRAWINGS, PROJECT SPECIFICATIONS, AND MANUFACTURER SPECIFICATIONS.
3. ALL STORM SEWER PIPES TO BE HDPE ADS N-12 OR EQUIVALENT, UNLESS OTHERWISE SPECIFIED.
4. ALL STORM SEWER PIPES SHOWN AS RCP ON THE PLANS SHALL BE REINFORCED CONCRETE PIPE CONFORMING TO ASTM C-76, UNLESS INDICATED OTHERWISE ON PLANS.

GROUND STABILIZATION		
SITE AREA DESCRIPTION	STABILIZATION TIME FRAME	STABILIZATION TIME FRAME EXCEPTIONS
PERIMETER DIKES, SWALES, DITCHES AND SLOPES	7 DAYS	NONE
HIGH QUALITY WATER (HQW) ZONES	7 DAYS	NONE
SLOPES STEEPER THAN 3:1	7 DAYS	IF SLOPES ARE 10' OR LESS IN LENGTH AND ARE NOT STEEPER THAN 2:1, 14 DAYS ARE ALLOWED.
SLOPES 3:1 OR FLATTER	14 DAYS	7-DAYS FOR SLOPES GREATER THAN 50 FEET IN LENGTH
ALL OTHER AREAS WITH SLOPES FLATTER THAN 4:1	14 DAYS	NONE (EXCEPT FOR PERIMETERS AND HQW ZONES)

EXISTING UTILITY NOTES

1. IT IS THE RESPONSIBILITY OF THE GENERAL CONTRACTOR TO VERIFY THE ACTUAL LOCATION AND AVAILABILITY OF ALL EXISTING AND PROPOSED UTILITIES IN THE FIELD PRIOR TO GROUND BREAKING.
2. EXISTING UTILITIES AND STRUCTURES SHOWN, BOTH UNDERGROUND AND ABOVE GROUND, ARE BASED ON A FIELD SURVEY AND THE BEST AVAILABLE RECORD DRAWINGS. THE CONTRACTOR SHALL FIELD VERIFY FIELD CONDITIONS PRIOR TO BEGINNING RELATED CONSTRUCTION. ANY DISCREPANCIES SHALL BE REPORTED TO THE OWNER'S REPRESENTATIVE IMMEDIATELY.

UTILITY CONTACTS:

1. CONTACT THE NORTH CAROLINA ONE CALL CENTER PRIOR TO DOING AND DIGGING. 1-800-632-4949

NOTICE REQUIRED

ALL EXISTING UNDERGROUND UTILITIES SHALL BE PHYSICALLY LOCATED BY CONTRACTOR PRIOR TO THE BEGINNING OF ANY CONSTRUCTION IN THE VICINITY OF SAID UTILITIES.

CONTRACTORS SHALL NOTIFY OPERATORS WHO MAINTAIN UNDERGROUND UTILITY LINES IN THE AREA OF PROPOSED EXCAVATION AT LEAST TWO WORKING DAYS, BUT NOT MORE THAN TEN WORKING DAYS PRIOR TO ANY EXCAVATION OR DEMOLITION.

CONTACT "CAROLINA ONE CALL" AT
1-800-632-4949

EMERGENCY DIAL 911 POLICE - FIRE - RESCUE

PCU STANDARD NOTES

1. A PRECONSTRUCTION MEETING IS REQUIRED BEFORE BEGINNING WORK. THE MEETING MUST BE SCHEDULED WITH PENDER COUNTY UTILITIES (PCU) AT LEAST ONEWEEK IN ADVANCE. ATTENDEES MUST INCLUDE PCU, THE SELECTED CONTRACTOR'S SUPERINTENDENT, THE SUPPLIER, AND THE CONSULTING ENGINEER.

2. ALL MATERIALS USED SHALL CONFORM TO PENDER COUNTY UTILITIES REQUIREMENTS. NON-CONFORMING MATERIAL WILL NOT BE ACCEPTED FOR FINAL CERTIFICATION.

3. ALL PIPE SHALL BE PVC. PVC PIPE WITHIN A CASING TO BE C900 DR 18(SEE PCU STANDARD DETAIL). ALL OTHER PVC PIPE TO BE SDR 21. THE USE OF DIP PIPE IS NOT ALLOWED. PCU MUST APPROVE THE USE OF DIP IN THE FIELD BEFORE INSTALLATION AND ONLY WHEN THERE ARE NO OTHER OPTIONS.

4. PCU STANDARD WATERLINE PIPE RESTRAINING METHOD IS MJ GRIP RINGS. AT A MINIMUM ALL FITTINGS, VALVES, ETC. MUST BE RESTRAINED. (SEE PCU STANDARD DETAIL).

5. PCU MUST INSPECT CASINGINSTALLATIONS PRIOR TO BACKFILL. PCU MUST WITNESS PRESSURE TESTS, AND WITHDRAWAL OF BACTERIOLOGICAL SAMPLES. CONTACT BOB FORAND TO SCHEDULE 910-259-0212.

6. CLOSE-OUT DOCUMENTS WHICH MUST BE RECEIVED PRIOR TO PCU SIGNING THE NC PWSS APPLICANT CERTIFICATION INCLUDE: BACTERIOLOGICAL TESTS, PRESSURE TESTS, DEED OF DEDICATION, ATTDAVITORELEASE OF LIENS, WARRANTY, AND RECORD DRAWINGS (PDF & CAD).

7. AN 18 MONTH WARRANTY PERIOD APPLIES TO ALL WATERLINE CONSTRUCTION. THIS WARRANTY PERIOD DOES NOT BEGIN UNTIL FINAL APPROVAL OF THE SYSTEM HAS BEEN RECEIVED FROM NC PWSS.

PENDER COUNTY UTILITIES
605 EAST FREMONT STREET
BURGAW, NC 28425

STANDARD NOTES
PCU WATER SYSTEMS
VERSION #: - OCTOBER 2015

NORTH CAROLINA PROFESSIONAL SEAL 031315 ENGINEER GARRY S. PAPE
05/13/2019

No.	Revision	Date	By

Designer: GSP	Scale
Drawn By: GSP	Date: May 2019
License #: P-0718	Job No.: 2019-0005

PECAN GROVE PLANTATION PHASE 6

Topsail Township — Pender County — North Carolina

GENERAL NOTES

PREPARED FOR:
Signature Westbrook NC, Ltd.
9337B Katy Freeway #377
Houston, TX 77024
713-223-3891

GSP CONSULTING, PLLC
ENGINEERING
6626 Gordon Road Unit C Wilmington, North Carolina 28411 tel: 910-442-7870 fax: 910-799-6659

Sheet No.
C-1

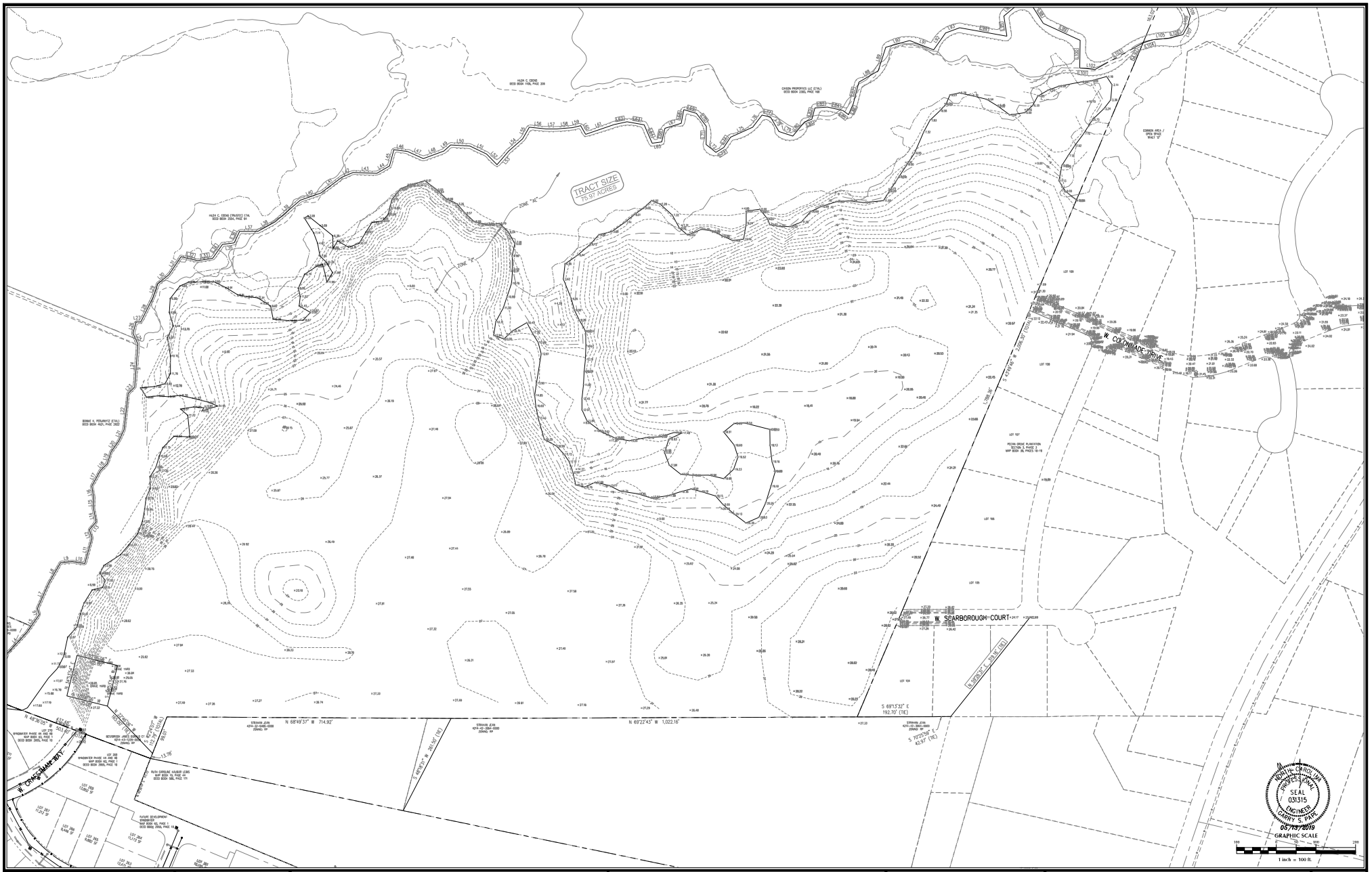

No.	Revision	Date	By

Designer GSP	Scale 1" = 100'
Drawn By GSP	Date May 2019
License # P-0718	Job No. 2019-0005

PECAN GROVE PLANTATION PHASE 6

Topsail Township — Pender County — North Carolina

EXISTING CONDITIONS

PREPARED FOR:
Signature Westbrook NC, Ltd.
9337B Katy Freeway #377
Houston, TX 77024
713-222-3891

GSP CONSULTING, PLLC
ENGINEERING
6626 Gordon Road Unit C Wilmington, North Carolina 28411 tel: 910-442-7870 fax: 910-799-6659

Sheet No.
C-2

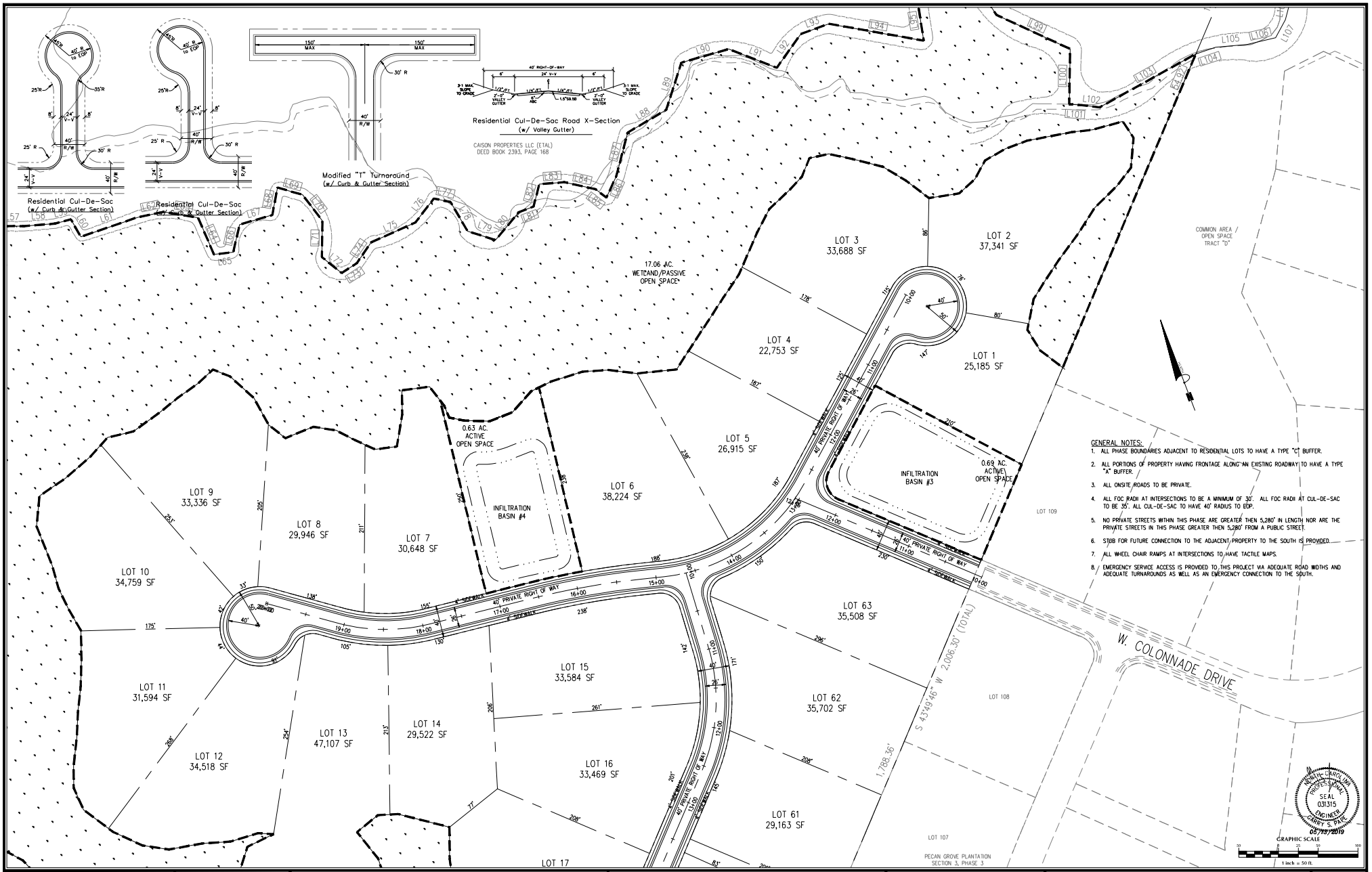

GENERAL NOTES:

1. ALL PHASE BOUNDARIES ADJACENT TO RESIDENTIAL LOTS TO HAVE A TYPE "C" BUFFER.
2. ALL PORTIONS OF PROPERTY HAVING FRONTAGE ALONG AN EXISTING ROADWAY TO HAVE A TYPE "A" BUFFER.
3. ALL ONSITE ROADS TO BE PRIVATE.
4. ALL FOC RADII AT INTERSECTIONS TO BE A MINIMUM OF 30'. ALL FOC RADII AT CUL-DE-SAC TO BE 35'. ALL CUL-DE-SAC TO HAVE 40' RADIUS TO EOP.
5. NO PRIVATE STREETS WITHIN THIS PHASE ARE GREATER THEN 5,280' IN LENGTH NOR ARE THE PRIVATE STREETS IN THIS PHASE GREATER THEN 5,280' FROM A PUBLIC STREET.
6. STUB FOR FUTURE CONNECTION TO THE ADJACENT PROPERTY TO THE SOUTH IS PROVIDED.
7. ALL WHEEL CHAIR RAMPS AT INTERSECTIONS TO HAVE TACTILE MAPS.
8. EMERGENCY SERVICE ACCESS IS PROVIDED TO THIS PROJECT VIA ADEQUATE ROAD WIDTHS AND ADEQUATE TURNAROUNDS AS WELL AS AN EMERGENCY CONNECTION TO THE SOUTH.

NORTH CAROLINA PROFESSIONAL SEAL 031315 ENGINEER CHARLY S. PATEL
05/13/2019

No.	Revision	Date	By

Designer GSP	Scale 1" = 50'
Drawn By GSP	Date May 2019
License # P-0718	Job No. 2019-0005

PECAN GROVE PLANTATION PHASE 6

Topsail Township — Pender County — North Carolina

SITE PLAN

PREPARED FOR:
Signature Westbrook NC, Ltd.
9337B Katy Freeway #377
Houston, TX 77024
713-223-3891

GSP CONSULTING, PLLC
ENGINEERING
6626 Gordon Road Unit C Wilmington, North Carolina 28411 tel: 910-442-7870 fax: 910-799-6659

Sheet No. C-3.1

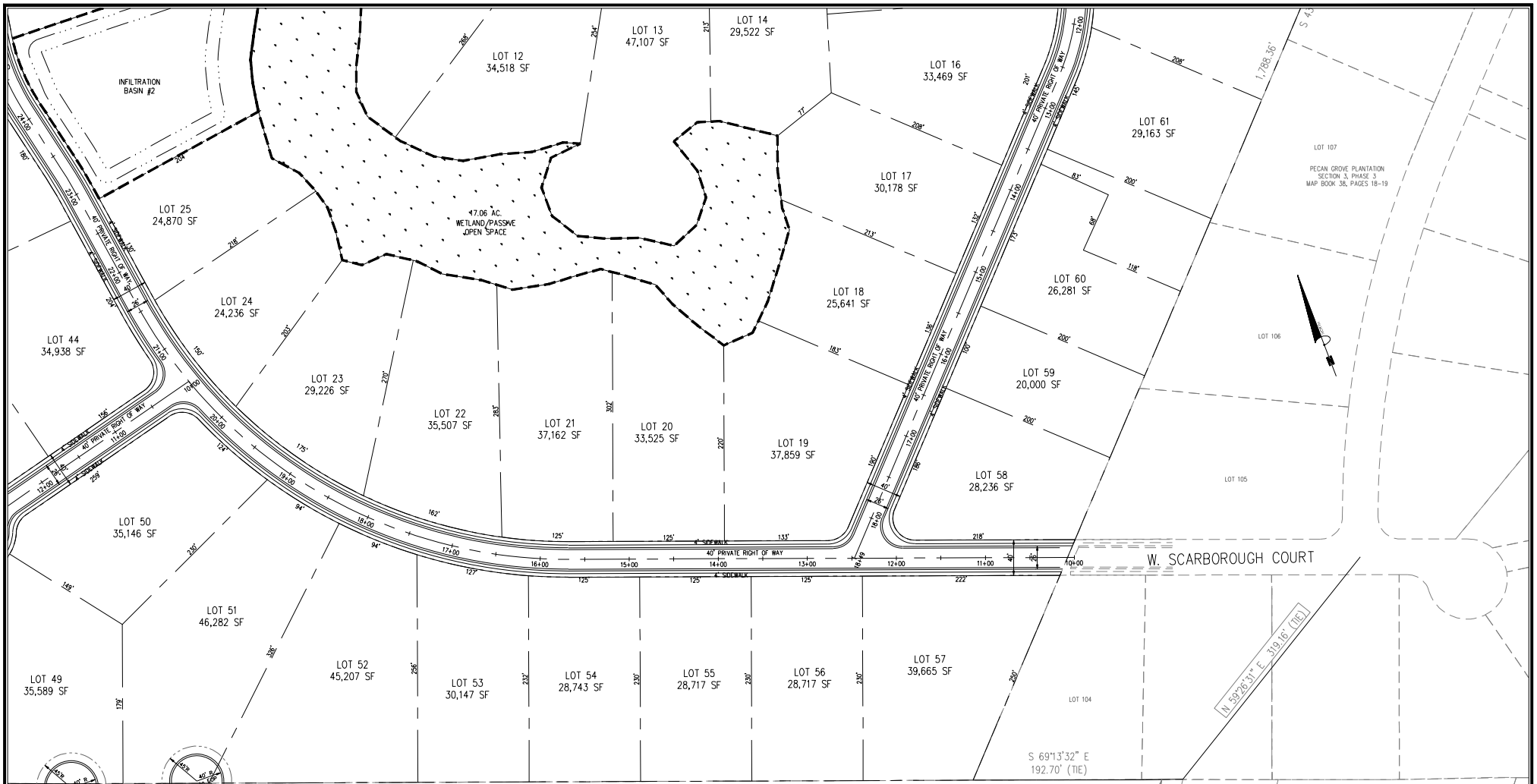

GENERAL NOTES:

1. ALL PHASE BOUNDARIES ADJACENT TO RESIDENTIAL LOTS TO HAVE A TYPE "C" BUFFER.
2. ALL PORTIONS OF PROPERTY HAVING FRONTAGE ALONG AN EXISTING ROADWAY TO HAVE A TYPE "A" BUFFER.
3. ALL ONSITE ROADS TO BE PRIVATE.
4. ALL FOC RADII AT INTERSECTIONS TO BE A MINIMUM OF 30'. ALL FOC RADII AT CUL-DE-SAC TO BE 35'. ALL CUL-DE-SAC TO HAVE 40' RADIUS TO EOP.
5. NO PRIVATE STREETS WITHIN THIS PHASE ARE GREATER THEN 5,280' IN LENGTH NOR ARE THE PRIVATE STREETS IN THIS PHASE GREATER THEN 5,280' FROM A PUBLIC STREET.
6. STUB FOR FUTURE CONNECTION TO THE ADJACENT PROPERTY TO THE SOUTH IS PROVIDED.
7. ALL WHEEL CHAIR RAMPS AT INTERSECTIONS TO HAVE TACTILE MAPS.
8. EMERGENCY SERVICE ACCESS IS PROVIDED TO THIS PROJECT VIA ADEQUATE ROAD WIDTHS AND ADEQUATE TURNAROUNDS AS WELL AS AN EMERGENCY CONNECTION TO THE SOUTH.

NORTH CAROLINA PROFESSIONAL SEAL 031315 ENGINEER GARRY S. PAPE
05/13/2019

No.	Revision	Date	By

Designer GSP	Scale 1" = 50'
Drawn By GSP	Date May 2019
License # P-0718	Job No. 2019-0005

PECAN GROVE PLANTATION PHASE 6

Topsail Township — Pender County — North Carolina

SITE PLAN

PREPARED FOR:
Signature Westbrook NC, Ltd.
9337B Katy Freeway #377
Houston, TX 77024
713-223-3891

GSP CONSULTING, PLLC
ENGINEERING
6626 Gordon Road Unit C Wilmington, North Carolina 28411 tel: 910-442-7870 fax: 910-799-6659

Sheet No. C-3.2

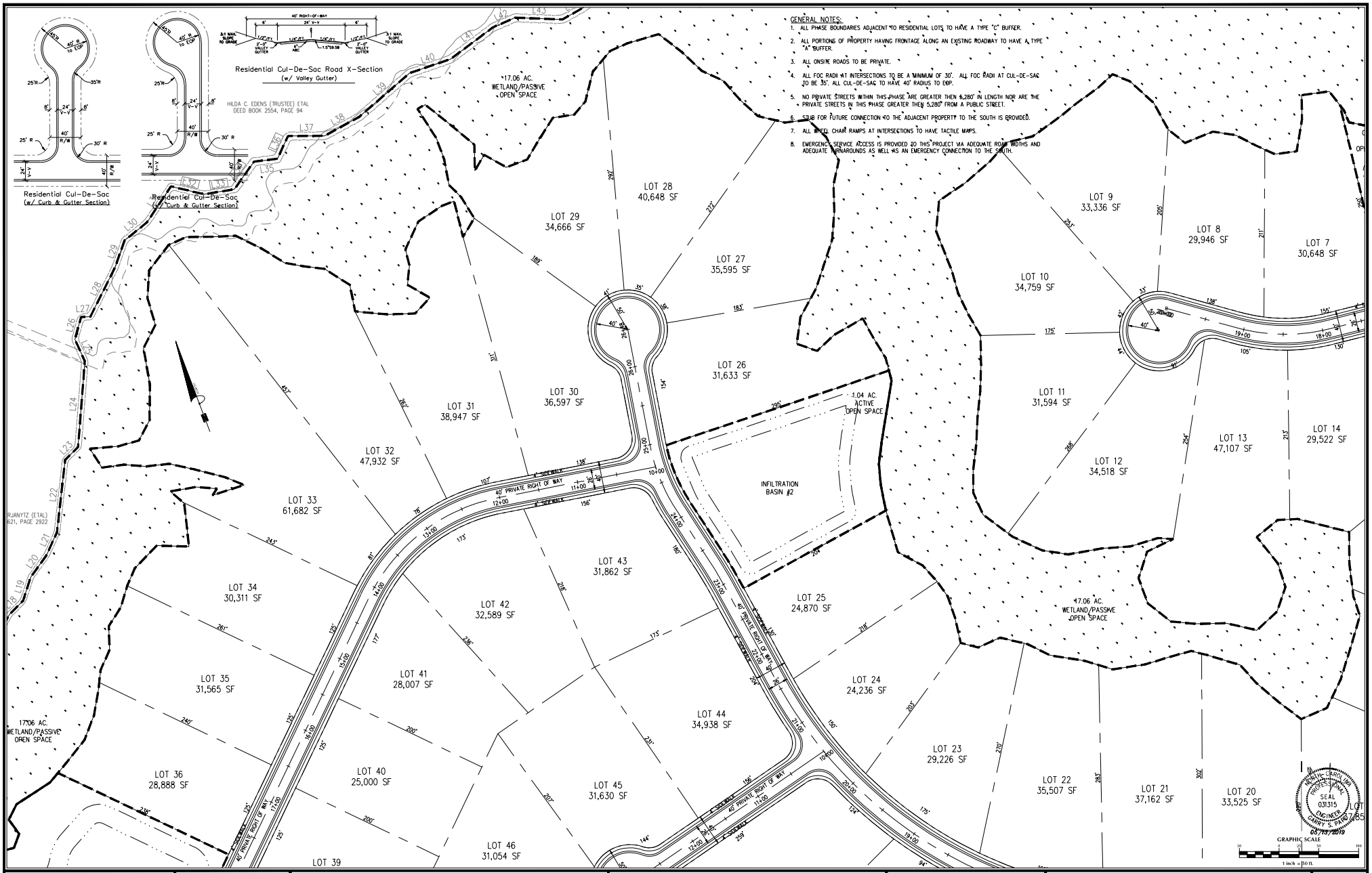

No.	Revision	Date	By

Designer	GSP
Drawn By	GSP
License #	P-0718
Scale	1" = 50'
Date	May 2019
Job No.	2019-0005

PECAN GROVE PLANTATION PHASE 6

Topsail Township — Pender County — North Carolina

SITE PLAN

PREPARED FOR:
Signature Westbrook NC, Ltd.
9337B Katy Freeway #377
Houston, TX 77024
713-223-3891

GSP CONSULTING, PLLC
ENGINEERING
6626 Gordon Road Unit C Wilmington, North Carolina 28411 tel: 910-442-7870 fax: 910-799-6659

Sheet No. C-3.3

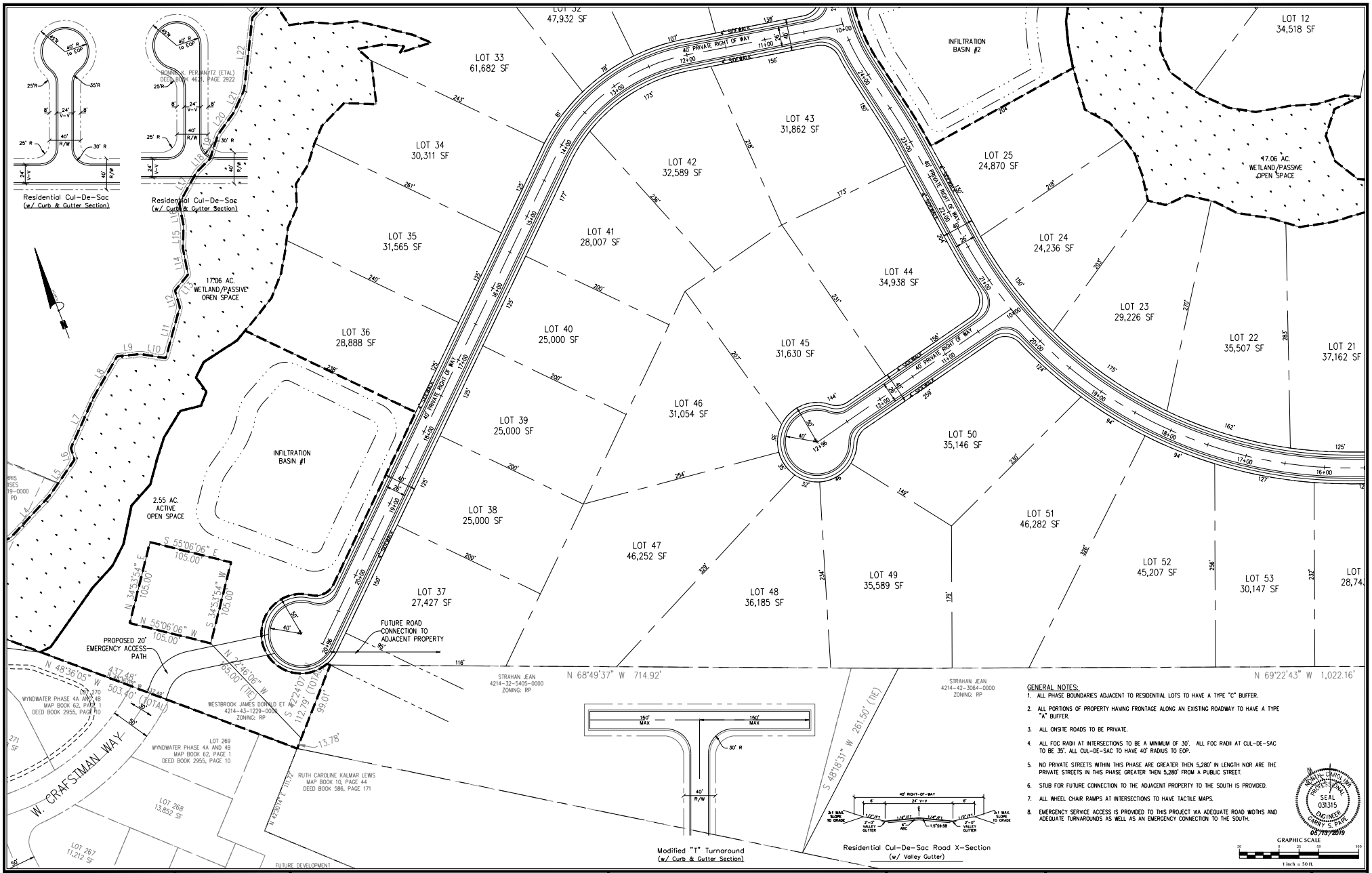

GENERAL NOTES:

1. ALL PHASE BOUNDARIES ADJACENT TO RESIDENTIAL LOTS TO HAVE A TYPE "C" BUFFER.
2. ALL PORTIONS OF PROPERTY HAVING FRONTAGE ALONG AN EXISTING ROADWAY TO HAVE A TYPE "A" BUFFER.
3. ALL ONSITE ROADS TO BE PRIVATE.
4. ALL FOC RADII AT INTERSECTIONS TO BE A MINIMUM OF 30'. ALL FOC RADII AT CUL-DE-SAC TO BE 35'. ALL CUL-DE-SAC TO HAVE 40' RADIUS TO EOP.
5. NO PRIVATE STREETS WITHIN THIS PHASE ARE GREATER THEN 5,280' IN LENGTH NOR ARE THE PRIVATE STREETS IN THIS PHASE GREATER THEN 5,280' FROM A PUBLIC STREET.
6. STUB FOR FUTURE CONNECTION TO THE ADJACENT PROPERTY TO THE SOUTH IS PROVIDED.
7. ALL WHEEL CHAIR RAMPS AT INTERSECTIONS TO HAVE TACTILE MAPS.
8. EMERGENCY SERVICE ACCESS IS PROVIDED TO THIS PROJECT VIA ADEQUATE ROAD WIDTHS AND ADEQUATE TURNAROUNDS AS WELL AS AN EMERGENCY CONNECTION TO THE SOUTH.

NORTH CAROLINA PROFESSIONAL SEAL 031315 ENGINEER GARRY S. PAPE
05/13/2019

No.	Revision	Date	By

Designer: GSP	Scale: 1" = 50'
Drawn By: GSP	Date: May 2019
License #: P-0718	Job No.: 2019-0005

PECAN GROVE PLANTATION PHASE 6

Topsail Township — Pender County — North Carolina

SITE PLAN

PREPARED FOR:
Signature Westbrook NC, Ltd.
9337B Katy Freeway #377
Houston, TX 77024
713-223-3891

GSP CONSULTING, PLLC
ENGINEERING
6626 Gordon Road Unit C Wilmington, North Carolina 28411 tel: 910-442-7870 fax: 910-799-6659

Sheet No. C-3.4

SEDIMENT BASIN CALCULATIONS

SEDIMENT TRAPPING DEVICE	DRAINAGE AREA (AC)	REQUIRED STORAGE (1,800CF/AC)	PROVIDED STORAGE (CF)	PEAK Q10 FLOW (CFS)	REQUIRED AREA (325 SF/CFS)	PROVIDED AREA (SF)	SKIMMER SIZE (in)
SEDIMENT BASIN #1	13.31	23,960	24,152	25.16	8,176	28,715	3.0
SEDIMENT BASIN #2	14.04	25,279	27,400	26.54	8,626	24,926	2.75
SEDIMENT BASIN #3	4.21	7,585	10,003	7.96	2,588	18,625	2.0
SEDIMENT BASIN #4	11.70	21,062	21,811	22.11	7,187	12,557	2.25

EROSION CONTROL NOTES

1. SEDIMENT BASIN WILL BE PUMPED DOWN BY MECHANICAL MEANS WHEN SEDIMENT REACHES 50% STORAGE ELEVATION AND MUCKED OUT.
2. PRIOR TO USE AS AN WET DETENTION BASIN, SEDIMENT BASIN WILL BE MUCKED OUT.
3. PRIOR TO THE CREATION OF ANY IMPERVIOUS SURFACES THE FINAL POND DESIGN SHOULD BE BUILT. SEE SHEETS C-6.1 & 6.2 FOR BASIN DETAILS.
4. ALL OUTLET STRUCTURE OPENINGS TO BE CLOSED UNTIL SKIMMERS ARE REMOVED.

GENERAL STORMWATER NOTES:

1. ALL STORM DRAINAGE TO BE CONSTRUCTED PER NCDENR, NCDOT & PENDER COUNTY STANDARDS.
2. STORM WATER MEASURES FOR THIS DEVELOPMENT WILL BE DESIGNED TO CONTROL THE POST DEVELOPMENT PEAK DISCHARGE FOR THE 10-YEAR STORM EVENT SO AS NOT TO EXCEED THE PRE-DEVELOPMENT PEAK RUNOFF DISCHARGE RATE TO MEET PENDER COUNTY STORM WATER REGULATIONS
3. BEST MANAGEMENT PRACTICES FOR E&SC TO BE UTILIZED TO PREVENT EROSION FROM OCCURRING, ELIMINATE SEDIMENT TRANSPORT AND TO REDUCE RUNOFF VELOCITIES IN ORDER TO PREVENT SCOURING AND EROSION.
4. ALL DRAINAGE EASEMENTS ARE TO BE A MINIMUM OF 20' IN WIDTH.

DRAINAGE NOTES

1. ALL IMPERVIOUS SURFACES TO DRAIN TO PROPOSED WET DETENTION BASINS.

GRADING NOTES:

1. ALL STORM INLETS WITHIN DISTURBANCE AREA TO HAVE EITHER INLET PROTECTION OR A SILT SACK INSTALLED SEE DETAILS ON SHEET C-7.

TOTAL LINEAR FEET WATER PROPOSED

1,525 LF - 2" SDR-21 WATERLINE
4,950 LF - 8" C900 WATERLINE

GENERAL UTILITY NOTES:

1. WATER SERVICE SHALL BE BUILT TO PENDER COUNTY UTILITIES STANDARDS AND SPECIFICATIONS.
2. ALL UTILITIES SHALL BE UNDERGROUND.
3. WATER SERVICE, TO BE A PUBLIC PIPED DISTRIBUTION SYSTEM OWNED AND OPERATED BY PENDER COUNTY.
4. ALL WATER AND SANITARY SEWER SYSTEMS WILL BE DESIGNED TO MEET PENDER COUNTY, PLURIS, LLC AND STATE REQUIREMENTS. FINAL CONSTRUCTION PLANS WILL BE SUBMITTED TO ALL AGENCIES TO OBTAIN PERMITS TO CONSTRUCT PRIOR TO UTILITY INSTALLATION.
5. ALL WATERLINES SHOWN WILL BE SIZED IN ACCORDANCE WITH APPLICABLE PENDER COUNTY AND STATE REQUIREMENTS.
6. ALL WATER SERVICES TO BE INSTALLED BY DEVELOPER AND INSPECTED BY PENDER COUNTY UTILITIES.
7. ALL MATERIALS SHALL CONFORM TO PENDER COUNTY UTILITIES REQUIREMENTS. NON-CONFORMING MATERIAL WILL NOT BE ACCEPTED FOR FINAL CERTIFICATION.
8. A ONE YEAR WARRANTY PERIOD APPLIES TO ALL UTILITIES CONSTRUCTION. THIS WARRANTY PERIOD DOES NOT BEGIN UNTIL NCDENR FINAL APPROVAL OF THE SYSTEM HAS BEEN RECEIVED. A WRITTEN COPY OF THE WARRANTY WILL BE REQUIRED PRIOR TO FINAL ACCEPTANCE.
9. PROPOSED WATERLINE TO BE LOCATED IN A MINIMUM OF 5' FROM BACK OF CURB.
10. RJ GRIP RINGS TO BE INSTALLED AT ALL FITTINGS.
11. ALL VALVES TO BE LOCATED OUTSIDE OF PAVEMENT.
12. ALL UTILITY CROSSINGS SHALL BE COORDINATED WITH PCU AT PRE-CONSTRUCTION MEETING PRIOR TO BEGINNING CONSTRUCTION.
13. COORDINATE HYDRANT DETAIL, TAPPING SLEEVE & FUTURE CONNECTION DETAILS WITH PCU AT PRE-CONSTRUCTION MEETING.
14. ALL WATERLINE TO BE C900 DR18 MINIMUM.

GENERAL SEWER NOTES:

1. ALL WATERLINES TO HAVE MINIMUM 10' SEPARATION FROM ALL SEWER LINES, MANHOLES AND CLEANOUTS & TO HAVE 3' OF COVER AND 18" CLEARANCE WHERE WATER CROSSES OTHER UTILITY LINES
2. ANY SANITARY SEWER SYSTEM OR ANY PORTION THEREOF, INCLUDING THE PUMP CHAMBER AND SERVICE CONNECTION PIPE TO THE COLLECTION MAIN, SHALL BE LOCATED AT LEAST A MINIMUM OF 10-FEET FROM ANY WATER LINE. SEWER LINES MAY CROSS A WATER LINE IF 18-INCH CLEAR SEPARATION DISTANCE IS MAINTAINED. WITH THE SEWER LINE CROSSING UNDER THE WATER LINE, WHEN CONDITIONS PREVENT AN 18-INCH CLEAR SEPARATION FROM BEING MAINTAINED OR WHENEVER IT IS NECESSARY FOR THE WATER LINE TO CROSS UNDER THE SEWER, THE SEWER LINE SHALL BE CONSTRUCTED OF DUCTILE IRON PIPE OR ITS EQUIVALENT AND THE WATER LINE SHALL BE CONSTRUCTED OF FERROUS MATERIALS EQUIVALENT TO WATER MAIN STANDARDS WITH FOR A DISTANCE OF AT LEAST TEN FEET ON EACH SIDE OF THE POINT OF CROSSING, WITH FULL SECTIONS OF PIPE CENTERED AT THE POINT OF CROSSING.

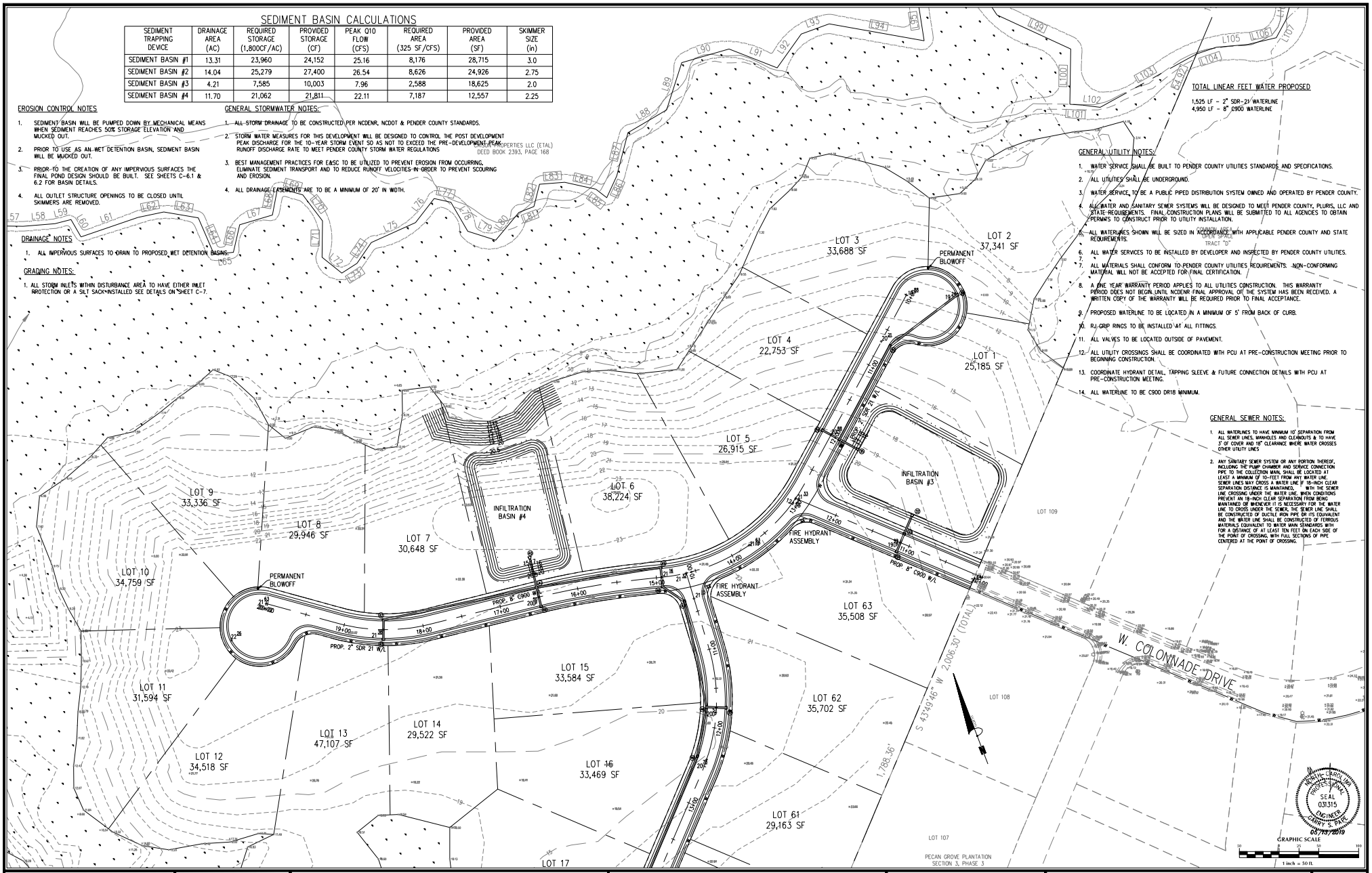

No.	Revision	Date	By

Designer GSP	Scale 1" = 50'
Drawn By GSP	Date May 2019
License # P-0718	Job No. 2019-0005

PECAN GROVE PLANTATION PHASE 6

Topsail Township — Pender County — North Carolina

GRADING & UTILITY PLAN

PREPARED FOR:
Signature Westbrook NC, Ltd.
9332B Katy Freeway #377
Houston, TX 77024
713-223-3891

GSP CONSULTING, PLLC
ENGINEERING
6626 Gordon Road Unit C Wilmington, North Carolina 28411 tel: 910-442-7870 fax: 910-799-6659

Sheet No. C-4.1

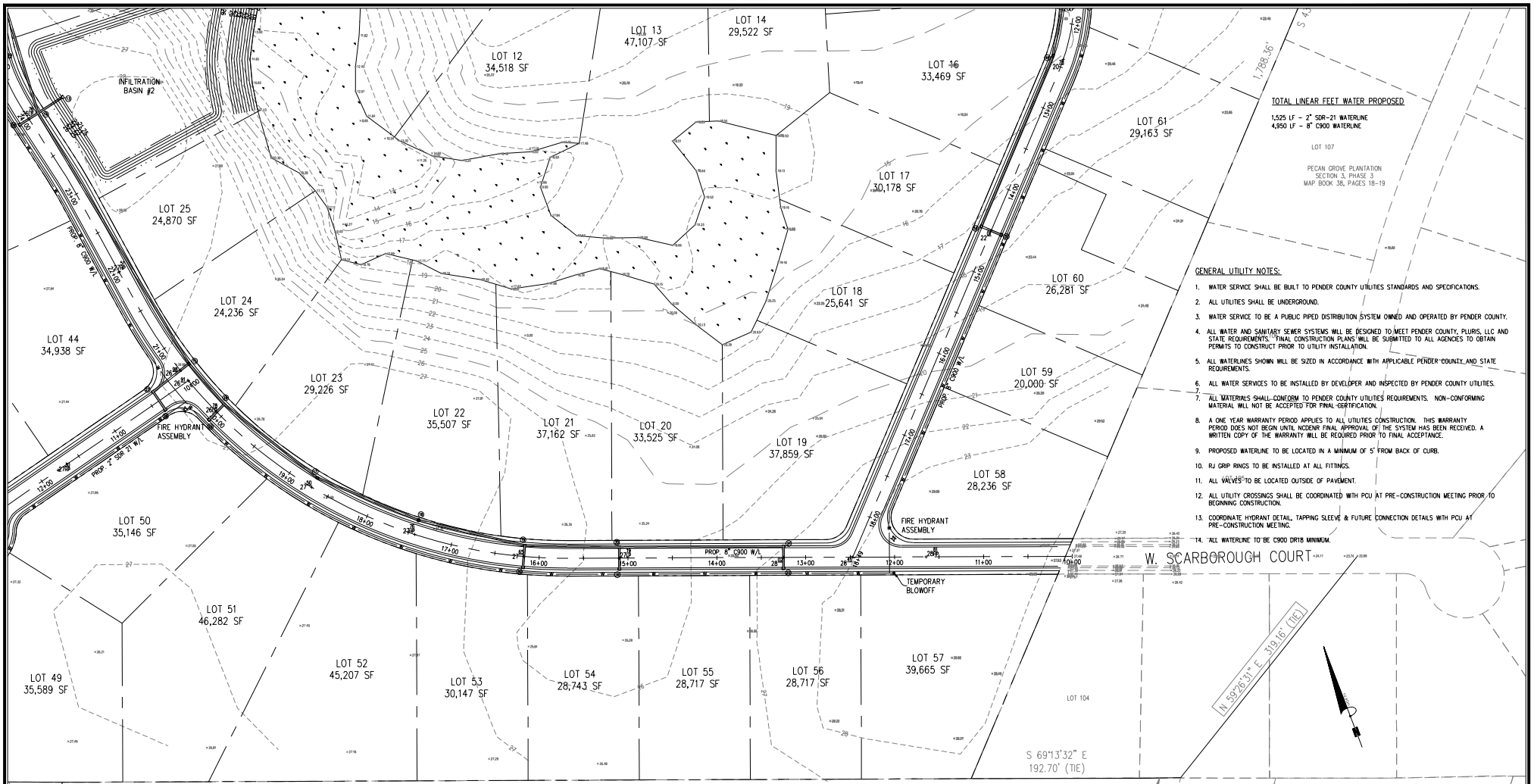

TOTAL LINEAR FEET WATER PROPOSED

1,525 LF - 2" SDR-21 WATERLINE
4,950 LF - 8" C900 WATERLINE

GENERAL UTILITY NOTES:

1. WATER SERVICE SHALL BE BUILT TO PENDER COUNTY UTILITIES STANDARDS AND SPECIFICATIONS.
2. ALL UTILITIES SHALL BE UNDERGROUND.
3. WATER SERVICE TO BE A PUBLIC PIPED DISTRIBUTION SYSTEM OWNED AND OPERATED BY PENDER COUNTY.
4. ALL WATER AND SANITARY SEWER SYSTEMS WILL BE DESIGNED TO MEET PENDER COUNTY, PLURIS, LLC AND STATE REQUIREMENTS. FINAL CONSTRUCTION PLANS WILL BE SUBMITTED TO ALL AGENCIES TO OBTAIN PERMITS TO CONSTRUCT PRIOR TO UTILITY INSTALLATION.
5. ALL WATERLINES SHOWN WILL BE SIZED IN ACCORDANCE WITH APPLICABLE PENDER COUNTY AND STATE REQUIREMENTS.
6. ALL WATER SERVICES TO BE INSTALLED BY DEVELOPER AND INSPECTED BY PENDER COUNTY UTILITIES.
7. ALL MATERIALS SHALL CONFORM TO PENDER COUNTY UTILITIES REQUIREMENTS. NON-CONFORMING MATERIAL WILL NOT BE ACCEPTED FOR FINAL CERTIFICATION.
8. A ONE YEAR WARRANTY PERIOD APPLIES TO ALL UTILITIES CONSTRUCTION. THIS WARRANTY PERIOD DOES NOT BEGIN UNTIL NCDENR FINAL APPROVAL OF THE SYSTEM HAS BEEN RECEIVED. A WRITTEN COPY OF THE WARRANTY WILL BE REQUIRED PRIOR TO FINAL ACCEPTANCE.
9. PROPOSED WATERLINE TO BE LOCATED IN A MINIMUM OF 5' FROM BACK OF CURB.
10. RJ GRIP RINGS TO BE INSTALLED AT ALL FITTINGS.
11. ALL VALVES TO BE LOCATED OUTSIDE OF PAVEMENT.
12. ALL UTILITY CROSSINGS SHALL BE COORDINATED WITH PCU AT PRE-CONSTRUCTION MEETING PRIOR TO BEGINNING CONSTRUCTION.
13. COORDINATE HYDRANT DETAIL, TAPPING SLEEVE & FUTURE CONNECTION DETAILS WITH PCU AT PRE-CONSTRUCTION MEETING.
14. ALL WATERLINE TO BE C900 DR18 MINIMUM.

SEDIMENT BASIN CALCULATIONS

SEDIMENT TRAPPING DEVICE	DRAINAGE AREA (AC)	REQUIRED STORAGE (1,800CF/AC)	PROVIDED STORAGE (CF)	PEAK Q10 FLOW (CFS)	REQUIRED AREA (325 SF/CFS)	PROVIDED AREA (SF)	SKIMMER SIZE (in)
SEDIMENT BASIN #1	13.31	23,960	24,152	25.16	8,176	28,715	3.0
SEDIMENT BASIN #2	14.04	25,279	27,400	26.54	8,626	24,926	2.75
SEDIMENT BASIN #3	4.21	7,585	10,003	7.96	2,588	18,625	2.0
SEDIMENT BASIN #4	11.70	21,062	21,811	22.11	7,187	12,557	2.25

EROSION CONTROL NOTES

1. SEDIMENT BASIN WILL BE PUMPED DOWN BY MECHANICAL MEANS WHEN SEDIMENT REACHES 50% STORAGE ELEVATION AND MUCKED OUT.
2. PRIOR TO USE AS AN WET DETENTION BASIN, SEDIMENT BASIN WILL BE MUCKED OUT.
3. PRIOR TO THE CREATION OF ANY IMPERVIOUS SURFACES THE FINAL POND DESIGN SHOULD BE BUILT. SEE SHEETS C-6.1 & 6.2 FOR BASIN DETAILS.
4. ALL OUTLET STRUCTURE OPENINGS TO BE CLOSED UNTIL SKIMMERS ARE REMOVED.

DRAINAGE NOTES

1. ALL IMPERVIOUS SURFACES TO DRAIN TO PROPOSED WET DETENTION BASINS.

GENERAL STORMWATER NOTES:

1. ALL STORM DRAINAGE TO BE CONSTRUCTED PER NCDENR, NCDOT & PENDER COUNTY STANDARDS.
2. STORM WATER MEASURES FOR THIS DEVELOPMENT WILL BE DESIGNED TO CONTROL THE POST DEVELOPMENT PEAK DISCHARGE FOR THE 10-YEAR STORM EVENT SO AS NOT TO EXCEED THE PRE-DEVELOPMENT PEAK RUNOFF DISCHARGE RATE TO MEET PENDER COUNTY STORM WATER REGULATIONS
3. BEST MANAGEMENT PRACTICES FOR E&SC TO BE UTILIZED TO PREVENT EROSION FROM OCCURRING, ELIMINATE SEDIMENT TRANSPORT AND TO REDUCE RUNOFF VELOCITIES IN ORDER TO PREVENT SCOURING AND EROSION.
4. ALL DRAINAGE EASEMENTS ARE TO BE A MINIMUM OF 20' IN WIDTH.

GRADING NOTES:

1. ALL STORM INLETS WITHIN DISTURBANCE AREA TO HAVE EITHER INLET PROTECTION OR A SILT SACK INSTALLED SEE DETAILS ON SHEET C-7.

GENERAL SEWER NOTES:

1. ALL WATERLINES TO HAVE MINIMUM 10' SEPARATION FROM ALL SEWER LINES, MANHOLES AND CLEANOUTS & TO HAVE 3' OF COVER AND 18" CLEARANCE WHERE WATER CROSSES OTHER UTILITY LINES
2. ANY SANITARY SEWER SYSTEM OR ANY PORTION THEREOF, INCLUDING THE PUMP CHAMBER AND SERVICE CONNECTION PIPE TO THE COLLECTION MAIN, SHALL BE LOCATED AT LEAST A MINIMUM OF 10-FEET FROM ANY WATER LINE. SEWER LINES MAY CROSS A WATER LINE IF 18-INCH CLEAR SEPARATION DISTANCE IS MAINTAINED. WITH THE SEWER LINE CROSSING UNDER THE WATER LINE. WHEN CONDITIONS PREVENT AN 18-INCH CLEAR SEPARATION FROM BEING MAINTAINED OR WHENEVER IT IS NECESSARY FOR THE WATER LINE TO CROSS UNDER THE SEWER, THE SEWER LINE SHALL BE CONSTRUCTED OF DUCTILE IRON PIPE OR ITS EQUIVALENT AND THE WATER LINE SHALL BE CONSTRUCTED OF FERROUS MATERIALS EQUIVALENT TO WATER MAIN STANDARDS WITH FOR A DISTANCE OF AT LEAST TEN FEET ON EACH SIDE OF THE POINT OF CROSSING, WITH FULL SECTIONS OF PIPE CENTERED AT THE POINT OF CROSSING.

NORTH CAROLINA PROFESSIONAL SEAL 031315 ENGINEER HARRY S. PAPE
05/13/2019

GRAPHIC SCALE
50 0 25 50 100
1 inch = 50 ft.

No.	Revision	Date	By

Designer GSP	Scale 1" = 50'
Drawn By GSP	Date May 2019
License # P-0718	Job No. 2019-0005

PECAN GROVE PLANTATION PHASE 6

Topsail Township Pender County North Carolina

GRADING & UTILITY PLAN

PREPARED FOR:
Signature Westbrook NC, Ltd.
9337B Katy Freeway #377
Houston, TX 77024
713-223-3891

GSP CONSULTING, PLLC
ENGINEERING
6626 Gordon Road Unit C Wilmington, North Carolina 28411 tel: 910-442-7870 fax: 910-799-6659

Sheet No. C-4.2

SEDIMENT BASIN CALCULATIONS

SEDIMENT TRAPPING DEVICE	DRAINAGE AREA (AC)	REQUIRED STORAGE (1,800CF/AC)	PROVIDED STORAGE (CF)	PEAK Q10 FLOW (CFS)	REQUIRED AREA (325 SF/CFS)	PROVIDED AREA (SF)	SKIMMER SIZE (in)
SEDIMENT BASIN #1	13.31	23,960	24,152	25.16	8,176	28,715	3.0
SEDIMENT BASIN #2	14.04	25,279	27,400	26.54	8,626	24,926	2.75
SEDIMENT BASIN #3	4.21	7,585	10,003	7.96	2,588	18,625	2.0
SEDIMENT BASIN #4	11.70	21,062	21,811	22.11	7,187	12,557	2.25

EROSION CONTROL NOTES

1. SEDIMENT BASIN WILL BE PUMPED DOWN BY MECHANICAL MEANS WHEN SEDIMENT REACHES 50% STORAGE ELEVATION AND MUCKED OUT.
2. PRIOR TO USE AS AN WET DETENTION BASIN, SEDIMENT BASIN WILL BE MUCKED OUT.
3. PRIOR TO THE CREATION OF ANY IMPERVIOUS SURFACES THE FINAL POND DESIGN SHOULD BE BUILT. SEE SHEETS C-6.1 & 6.2 FOR BASIN DETAILS.
4. ALL OUTLET STRUCTURE OPENINGS TO BE CLOSED UNTIL SKIMMERS ARE REMOVED.

DRAINAGE NOTES

1. ALL IMPERVIOUS SURFACES TO DRAIN TO PROPOSED WET DETENTION BASINS.

GRADING NOTES:

1. ALL STORM INLETS WITHIN DISTURBANCE AREA TO HAVE EITHER INLET PROTECTION OR A SILT SACK INSTALLED SEE DETAILS ON SHEET C-7.

GENERAL STORMWATER NOTES:

1. ALL STORM DRAINAGE TO BE CONSTRUCTED PER NCDENR, NCDOT & PENDER COUNTY STANDARDS.
2. STORM WATER MEASURES FOR THIS DEVELOPMENT WILL BE DESIGNED TO CONTROL THE POST DEVELOPMENT PEAK DISCHARGE FOR THE 10-YEAR STORM EVENT SO AS NOT TO EXCEED THE PRE-DEVELOPMENT PEAK RUNOFF DISCHARGE RATE TO MEET PENDER COUNTY STORM WATER REGULATIONS
3. BEST MANAGEMENT PRACTICES FOR EASC TO BE UTILIZED TO PREVENT EROSION FROM OCCURRING. ELIMINATE SEDIMENT TRANSPORT AND TO REDUCE RUNOFF VELOCITIES IN ORDER TO PREVENT SCOURING AND EROSION.
4. ALL DRAINAGE EASEMENTS ARE TO BE A MINIMUM OF 20' IN WIDTH.

TOTAL LINEAR FEET WATER PROPOSED

1,525 LF - 2" SDR-21 WATERLINE
4,950 LF - 8" C900 WATERLINE

GENERAL UTILITY NOTES:

1. WATER SERVICE SHALL BE BUILT TO PENDER COUNTY UTILITIES STANDARDS AND SPECIFICATIONS.
2. ALL UTILITIES SHALL BE UNDERGROUND.
3. WATER SERVICE TO BE A PUBLIC PIPED DISTRIBUTION SYSTEM OWNED AND OPERATED BY PENDER COUNTY.
4. ALL WATER AND SANITARY SEWER SYSTEMS WILL BE DESIGNED TO MEET PENDER COUNTY, PLURIS, LLC AND STATE REQUIREMENTS. FINAL CONSTRUCTION PLANS WILL BE SUBMITTED TO ALL AGENCIES TO OBTAIN PERMITS TO CONSTRUCT PRIOR TO UTILITY INSTALLATION.
5. ALL WATERLINES SHOWN WILL BE SIZED IN ACCORDANCE WITH APPLICABLE PENDER COUNTY AND STATE REQUIREMENTS.
6. ALL WATER SERVICES TO BE INSTALLED BY DEVELOPER AND INSPECTED BY PENDER COUNTY UTILITIES.
7. ALL MATERIALS SHALL CONFORM TO PENDER COUNTY UTILITIES REQUIREMENTS. NON-CONFORMING MATERIAL WILL NOT BE ACCEPTED FOR FINAL CERTIFICATION.
8. A ONE YEAR WARRANTY PERIOD APPLIES TO ALL UTILITIES CONSTRUCTION. THIS WARRANTY PERIOD DOES NOT BEGIN UNTIL SUCH FINAL APPROVAL OF THE SYSTEM HAS BEEN RECEIVED. A WRITTEN COPY OF THE WARRANTY WILL BE REQUIRED PRIOR TO FINAL ACCEPTANCE.
9. PROPOSED WATERLINE TO BE LOCATED IN A MINIMUM OF 5' FROM BACK OF CURB.
10. RJ GRIP RINGS TO BE INSTALLED AT ALL FITTINGS.
11. ALL VALVES TO BE LOCATED OUTSIDE OF PAVEMENT.
12. ALL UTILITY CROSSINGS SHALL BE COORDINATED WITH PCU AT PRE-CONSTRUCTION MEETING PRIOR TO BEGINNING CONSTRUCTION.
13. COORDINATE HYDRANT DETAIL, TAPPING SLEEVE & FUTURE CONNECTION DETAILS WITH PCU AT PRE-CONSTRUCTION MEETING.
14. ALL WATERLINE TO BE C900 DR18 MINIMUM.

GENERAL SEWER NOTES:

1. ALL WATERLINES TO HAVE MINIMUM 10' SEPARATION FROM ALL SEWER LINES, MANHOLES AND CLEANOUTS & TO HAVE 3' OF COVER AND 18" CLEARANCE WHERE WATER CROSSES SEWER UTILITY LINES
2. ANY SANITARY SEWER SYSTEM OR ANY PORTION THEREOF, INCLUDING THE PUMP CHAMBER AND SERVICE CONNECTION PIPE TO THE COLLECTION MAIN, SHALL BE LOCATED AT LEAST A MINIMUM OF 15-FEET FROM ANY WATER LINE. SEWER LINES MAY CROSS A WATER LINE IF 18-INCH CLEAR SEPARATION DISTANCE IS MAINTAINED. WITH THE SEWER LINE CROSSING UNDER THE WATER LINE, WHEN CONDITIONS PREVENT AN 18-INCH CLEAR SEPARATION FROM BEING MAINTAINED OR WHENEVER IT IS NECESSARY FOR THE WATER LINE TO CROSS UNDER THE SEWER, THE SEWER LINE SHALL BE CONSTRUCTED OF DUCTILE IRON PIPE OR ITS EQUIVALENT AND THE WATER LINE SHALL BE CONSTRUCTED OF FERROUS MATERIALS EQUIVALENT TO WATER MAIN STANDARDS WITH FOR A DISTANCE OF 10' (ONE TEN FEET ON EACH SIDE OF THE POINT OF CROSSING, WITH FULL SECTIONS OF PIPE CENTERED AT THE POINT OF CROSSING.

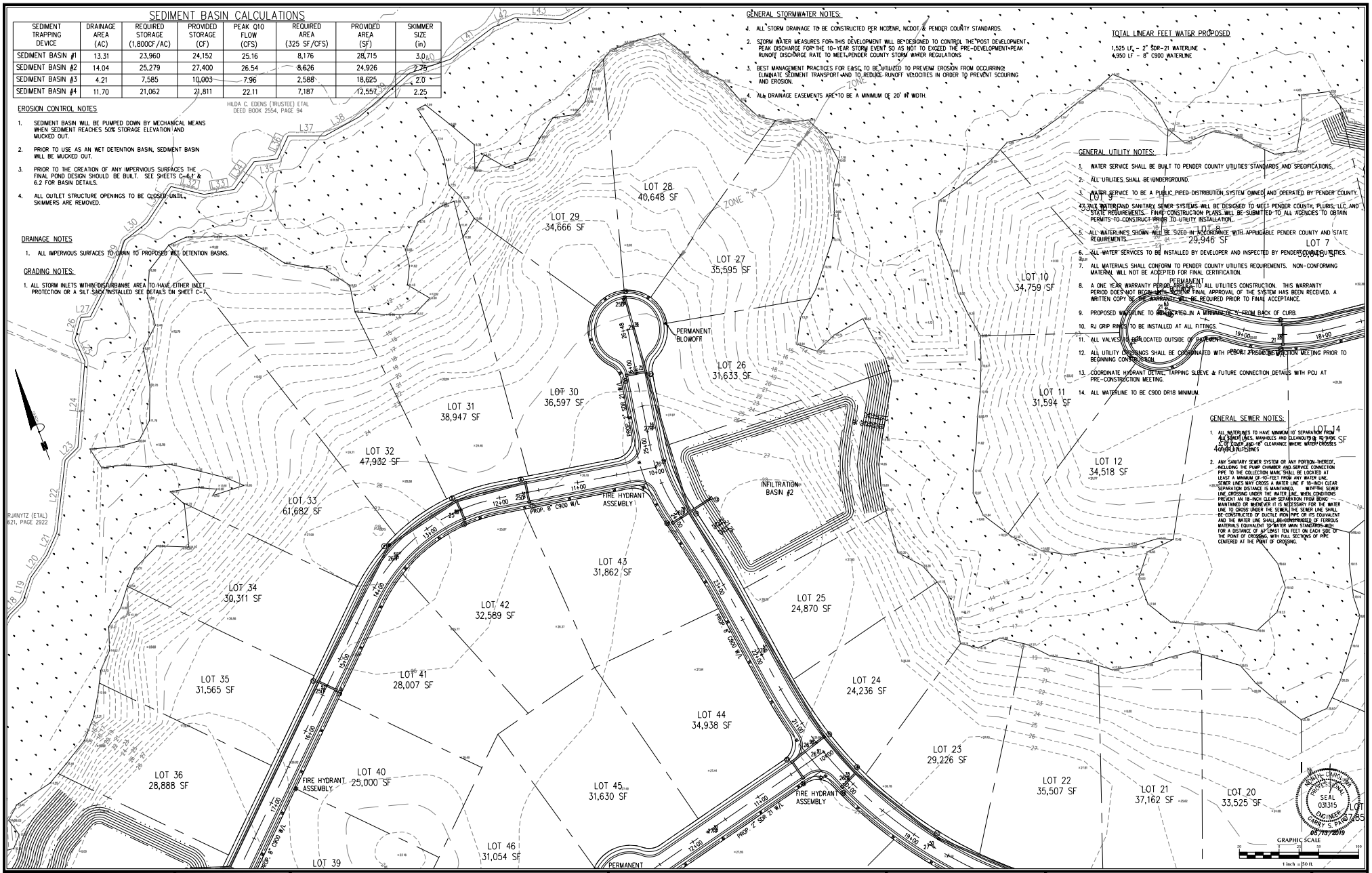

No.	Revision	Date	By

Designer	GSP
Scale	1" = 50'
Drawn By	GSP
Date	May 2019
License #	P-0718
Job No.	2019-0005

PECAN GROVE PLANTATION PHASE 6

Topsail Township — Pender County — North Carolina

GRADING & UTILITY PLAN

PREPARED FOR:
Signature Westbrook NC, Ltd.
9337B Katy Freeway #377
Houston, TX 77024
713-223-3891

GSP CONSULTING, PLLC
ENGINEERING
6626 Gordon Road Unit C Wilmington, North Carolina 28411 tel: 910-442-7870 fax: 910-799-6659

NORTH CAROLINA PROFESSIONAL SEAL 031315 ENGINEER CHARLES S. PARKER
05/13/2019

Sheet No. C-4.3

SEDIMENT BASIN CALCULATIONS

SEDIMENT TRAPPING DEVICE	DRAINAGE AREA (AC)	REQUIRED STORAGE (1,800CF/AC)	PROVIDED STORAGE (CF)	PEAK Q10 FLOW (CFS)	REQUIRED AREA (325 SF/CFS)	PROVIDED AREA (SF)	SKIMMER SIZE (in)
SEDIMENT BASIN #1	13.31	23,960	24,152	26.16	8,176	28,715	3.0
SEDIMENT BASIN #2	14.04	25,279	27,400	26.54	8,626	24,926	2.75
SEDIMENT BASIN #3	4.21	7,585	10,003	7.96	2,588	18,625	2.0
SEDIMENT BASIN #4	11.70	21,062	21,811	22.11	7,187	12,957	2.25

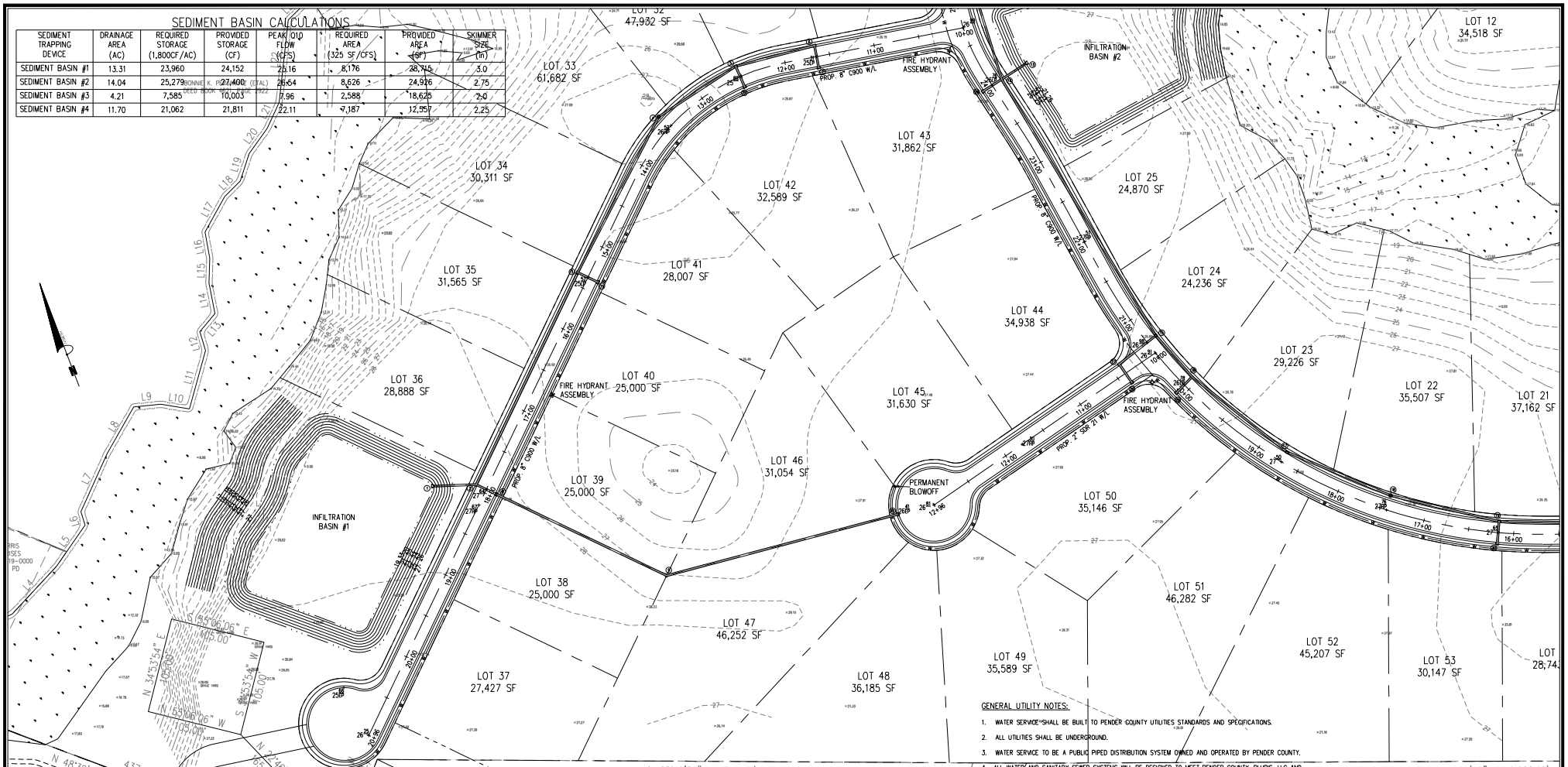

GENERAL UTILITY NOTES:

1. WATER SERVICE SHALL BE BUILT TO PENDER COUNTY UTILITIES STANDARDS AND SPECIFICATIONS.
2. ALL UTILITIES SHALL BE UNDERGROUND.
3. WATER SERVICE TO BE A PUBLIC PIPED DISTRIBUTION SYSTEM OWNED AND OPERATED BY PENDER COUNTY.
4. ALL WATER AND SANITARY SEWER SYSTEMS WILL BE DESIGNED TO MEET PENDER COUNTY, PLURIS, LLC AND STATE REQUIREMENTS. FINAL CONSTRUCTION PLANS WILL BE SUBMITTED TO ALL AGENCIES TO OBTAIN PERMITS TO CONSTRUCT PRIOR TO UTILITY INSTALLATION.
5. ALL WATERLINES SHOWN WILL BE SIZED IN ACCORDANCE WITH APPLICABLE PENDER COUNTY AND STATE REQUIREMENTS.
6. ALL WATER SERVICES TO BE INSTALLED BY DEVELOPER AND INSPECTED BY PENDER COUNTY UTILITIES.
7. ALL MATERIALS SHALL CONFORM TO PENDER COUNTY UTILITIES REQUIREMENTS. NON-CONFORMING MATERIAL WILL NOT BE ACCEPTED FOR FINAL CERTIFICATION.
8. A ONE YEAR WARRANTY PERIOD APPLIES TO ALL UTILITIES CONSTRUCTION. THIS WARRANTY PERIOD DOES NOT BEGIN UNTIL NCDENR FINAL APPROVAL OF THE SYSTEM HAS BEEN RECEIVED. A WRITTEN COPY OF THE WARRANTY WILL BE REQUIRED PRIOR TO FINAL ACCEPTANCE.
9. PROPOSED WATERLINE TO BE LOCATED IN A MINIMUM OF 5' FROM BACK OF CURB.
10. RJ GRIP RINGS TO BE INSTALLED AT ALL FITTINGS.
11. ALL VALVES TO BE LOCATED OUTSIDE OF PAVEMENT.
12. ALL UTILITY CROSSINGS SHALL BE COORDINATED WITH PCU AT PRE-CONSTRUCTION MEETING PRIOR TO BEGINNING CONSTRUCTION.
13. COORDINATE HYDRANT DETAIL, TAPPING SLEEVE & FUTURE CONNECTION DETAILS WITH PCU AT PRE-CONSTRUCTION MEETING.
14. ALL WATERLINE TO BE C900 DR18 MINIMUM.

DRAINAGE NOTES

1. ALL IMPERVIOUS SURFACES TO DRAIN TO PROPOSED WET DETENTION BASINS.

GRADING NOTES:

1. ALL STORM INLETS WITHIN DISTURBANCE AREA TO HAVE EITHER INLET PROTECTION OR A SILT SACK INSTALLED SEE DETAILS ON SHEET C-7.

GENERAL STORMWATER NOTES:

1. ALL STORM DRAINAGE TO BE CONSTRUCTED PER NCDENR, NCDOT & PENDER COUNTY STANDARDS.
2. STORM WATER MEASURES FOR THIS DEVELOPMENT WILL BE DESIGNED TO CONTROL THE POST DEVELOPMENT PEAK DISCHARGE FOR THE 10-YEAR STORM EVENT SO AS NOT TO EXCEED THE PRE-DEVELOPMENT PEAK RUNOFF DISCHARGE RATE TO MEET PENDER COUNTY STORM WATER REGULATIONS
3. BEST MANAGEMENT PRACTICES FOR E&SC TO BE UTILIZED TO PREVENT EROSION FROM OCCURRING, ELIMINATE SEDIMENT TRANSPORT AND TO REDUCE RUNOFF VELOCITIES IN ORDER TO PREVENT SCOURING AND EROSION.
4. ALL DRAINAGE EASEMENTS ARE TO BE A MINIMUM OF 20' IN WIDTH.

EROSION CONTROL NOTES

1. SEDIMENT BASIN WILL BE PUMPED DOWN BY MECHANICAL MEANS WHEN SEDIMENT REACHES 50% STORAGE ELEVATION AND MUCKED OUT.
2. PRIOR TO USE AS AN WET DETENTION BASIN, SEDIMENT BASIN WILL BE MUCKED OUT.
3. PRIOR TO THE CREATION OF ANY IMPERVIOUS SURFACES THE FINAL POND DESIGN SHOULD BE BUILT. SEE SHEETS C-6.1 & 6.2 FOR BASIN DETAILS.
4. ALL OUTLET STRUCTURE OPENINGS TO BE CLOSED UNTIL SKIMMERS ARE REMOVED.

GENERAL SEWER NOTES:

1. ALL WATERLINES TO HAVE MINIMUM 10' SEPARATION FROM ALL SEWER LINES, MANHOLES AND CLEANOUTS & TO HAVE 3' OF COVER AND 18" CLEARANCE WHERE WATER CROSSES OTHER UTILITY LINES
2. ANY SANITARY SEWER SYSTEM OR ANY PORTION THEREOF, INCLUDING THE PUMP CHAMBER AND SERVICE CONNECTION PIPE TO THE COLLECTION MAIN, SHALL BE LOCATED AT LEAST A MINIMUM OF 10-FEET FROM ANY WATER LINE. SEWER LINES MAY CROSS A WATER LINE IF 18-INCH CLEAR SEPARATION DISTANCE IS MAINTAINED. WITH THE SEWER LINE CROSSING UNDER THE WATER LINE. WHEN CONDITIONS PREVENT AN 18-INCH CLEAR SEPARATION FROM BEING MAINTAINED OR WHENEVER IT IS NECESSARY FOR THE WATER LINE TO CROSS UNDER THE SEWER, THE SEWER LINE SHALL BE CONSTRUCTED OF DUCTILE IRON PIPE OR ITS EQUIVALENT AND THE WATER LINE SHALL BE CONSTRUCTED OF FERROUS MATERIALS EQUIVALENT TO WATER MAIN STANDARDS WITH FOR A DISTANCE OF AT LEAST TEN FEET ON EACH SIDE OF THE POINT OF CROSSING, WITH FULL SECTIONS OF PIPE CENTERED AT THE POINT OF CROSSING.

TOTAL LINEAR FEET WATER PROPOSED

1,525 LF - 2" SDR-21 WATERLINE
4,950 LF - 8" C900 WATERLINE

NORTH CAROLINA PROFESSIONAL SEAL 031315 ENGINEER HARRY S. PAPE
05/13/2019

GRAPHIC SCALE
1 inch = 50 ft.

No.	Revision	Date	By

Designer GSP	Scale 1" = 50'
Drawn By GSP	Date May 2019
License # P-0718	Job No. 2019-0005

PECAN GROVE PLANTATION PHASE 6

Topsail Township — Pender County — North Carolina

GRADING & UTILITY PLAN

PREPARED FOR:
Signature Westbrook NC, Ltd.
9337B Katy Freeway #377
Houston, TX 77024
713-223-3891

GSP CONSULTING, PLLC
ENGINEERING
6626 Gordon Road Unit C Wilmington, North Carolina 28411 tel: 910-442-7870 fax: 910-799-6659

Sheet No. C-4.4

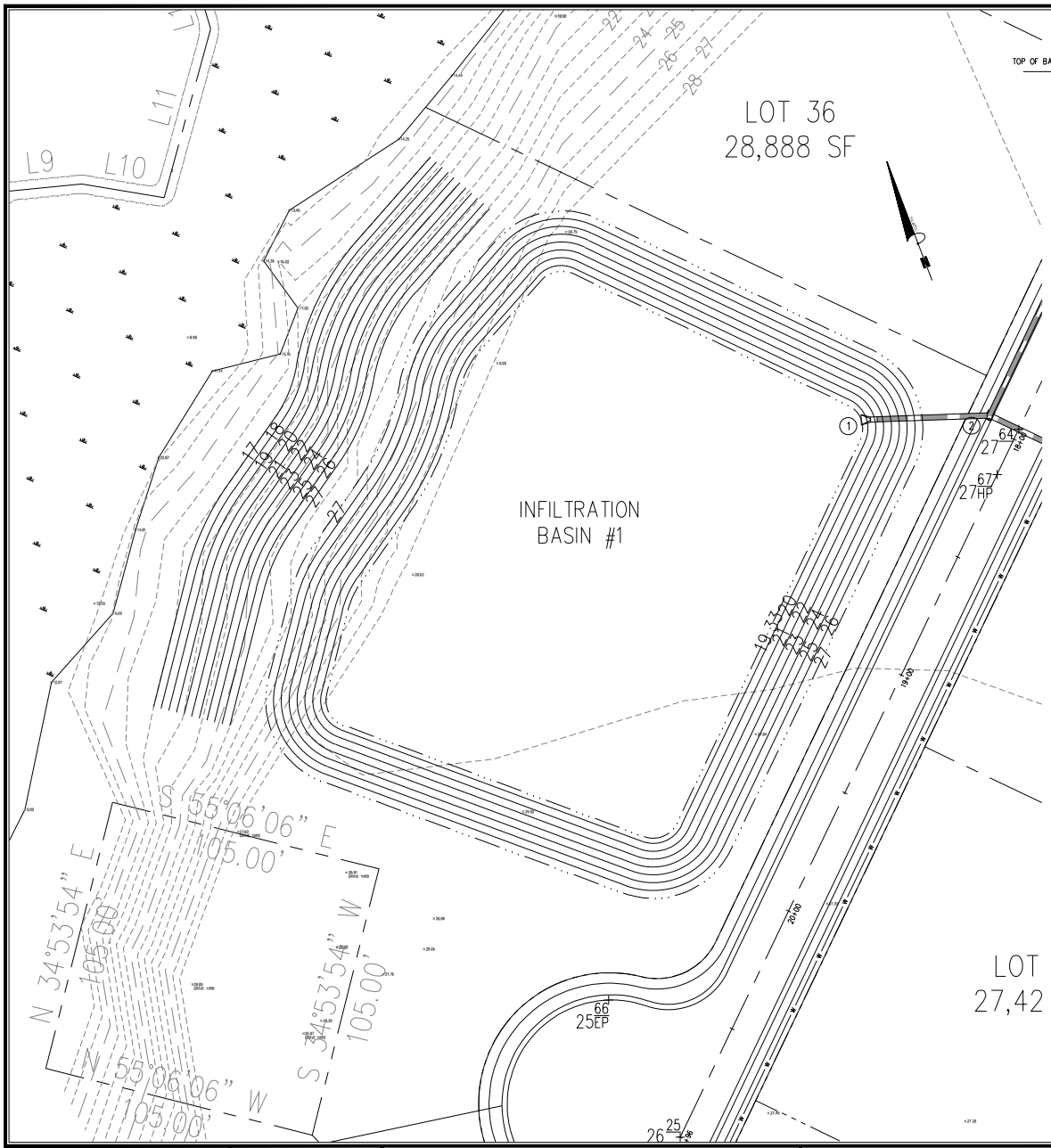

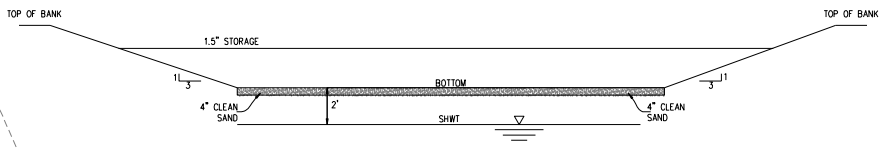

INFILTRATION BASIN	GROUND ELEVATION	SHWT DEPTH	SHWT ELEVATION	BASIN BOTTOM ELEVATION	BASIN DEPTH (FT)	1.5" STORAGE VOLUME REQ. (CF)	2.5 X 1.5" STORAGE VOLUME REQ. (CF)	STORAGE ELEVATION	STORAGE VOLUME PROV. (CF)	TOP OF BANK ELEVATION
BASIN #1	27.50	122"	17.33	19.33	7.67	23,893	59,733	21.40	60,052	27.00
BASIN #2	26.75	90"	19.25	21.25	4.75	27,428	68,569	24.00	69,809	26.00
BASIN #3	17.75	48"	13.75	15.75	3.25	8,896	22,239	17.00	23,440	19.00
BASIN #4	23.00	118"	13.17	15.17	7.83	24,237	60,594	19.80	60,869	20.50

INFILTRATION BASIN CROSS-SECTION
N.T.S.

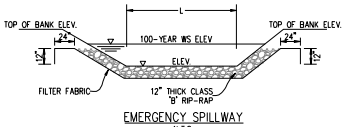

EMERGENCY SPILLWAY
N.T.S.

NOTES:

1. ALL IMPERVIOUS SITE AREA TO BE DRAINED TO PROPOSED STORM SEWER SYSTEM AND DISCHARGED TO INFILTRATION BASIN.
2. BASIN WILL BE PUMPED DOWN BY MECHANICAL MEANS IN CASE OF EMERGENCY.
3. PRIOR TO USE AS AN INFILTRATION BASIN, ALL ACCUMULATED SEDIMENT SHALL BE REMOVED AND PROPERLY DISPOSED OF. THEN THE APPROPRIATE MODIFICATIONS TO THE BASIN CAN BE INCORPORATED.
4. ESTABLISHED GRASS REQUIRED IN THE SWALES, DITCHES & BANKS OF THE INFILTRATION BASIN PRIOR TO ISSUANCE OF CERTIFICATE OF OCCUPANCY.

NORTH CAROLINA PROFESSIONAL SEAL 031315 ENGINEER GARRY S. PAPE
05/13/2019

GRAPHIC SCALE
20 0 20 40
1 inch = 20 ft.

No.	Revision	Date	By

Designer GSP	Scale 1" = 20'
Drawn By GSP	Date May 2019
License # P-0718	Job No. 2019-0005

PECAN GROVE PLANTATION
PHASE 6
Topsail Township — Pender County — North Carolina

INFILTRATION BASIN #1 DETAILS

PREPARED FOR:
Signature Westbrook NC, Ltd.
9337B Katy Freeway #377
Houston, TX 77024
713-223-3891

GSP CONSULTING, PLLC
ENGINEERING
6626 Gordon Road Unit C Wilmington, North Carolina 28411 tel: 910-442-7870 fax: 910-799-6659

Sheet No.
C-6.1

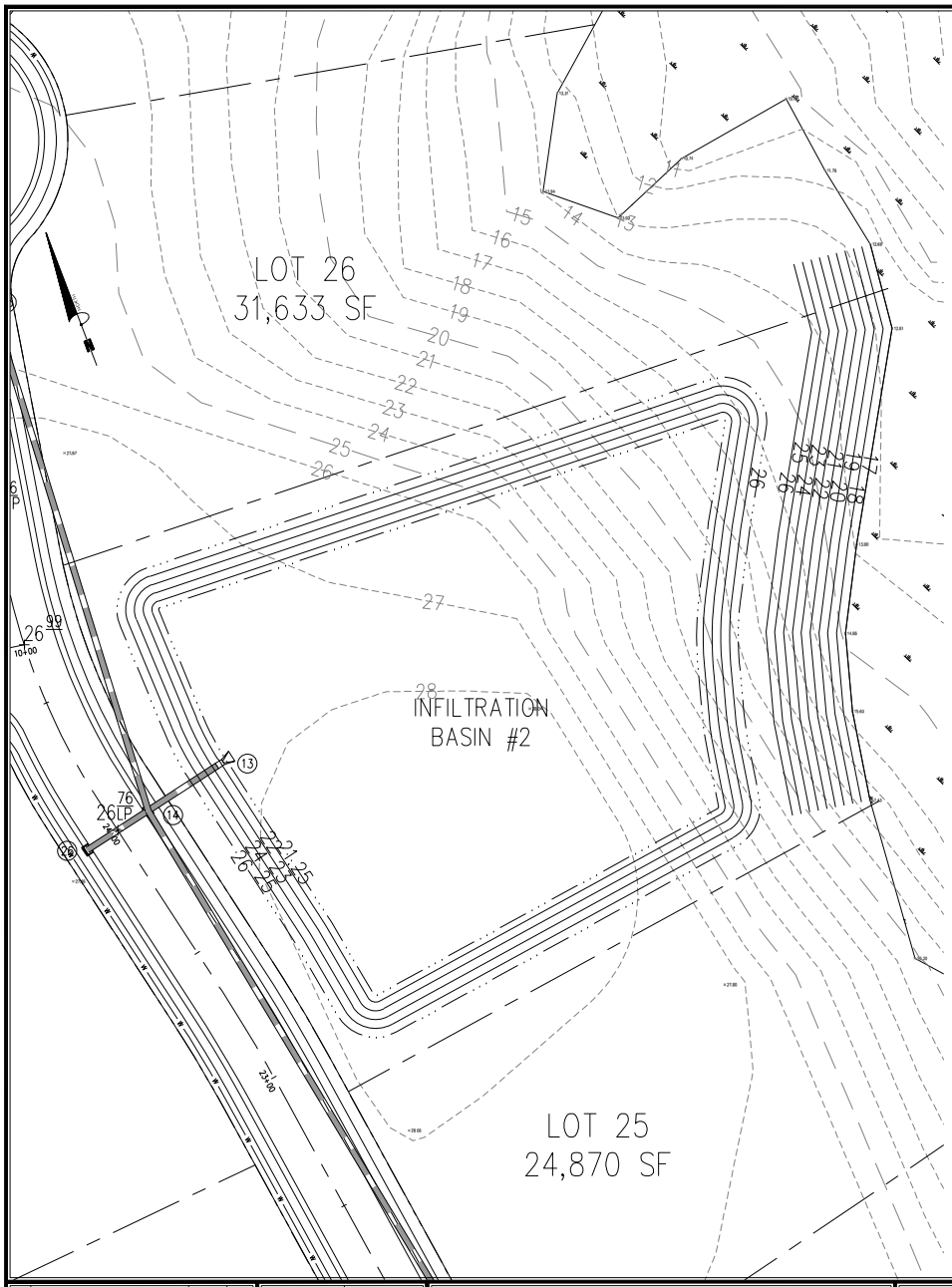

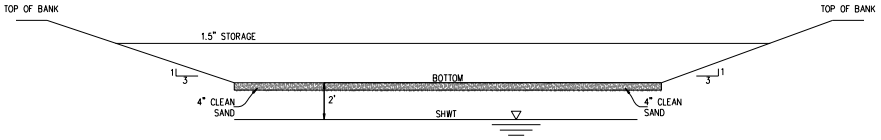

INFILTRATION BASIN	GROUND ELEVATION	SHWT DEPTH	SHWT ELEVATION	BASIN BOTTOM ELEVATION	BASIN DEPTH (FT)	1.5" STORAGE VOLUME REQ. (CF)	2.5 X 1.5" STORAGE VOLUME REQ. (CF)	STORAGE ELEVATION	STORAGE VOLUME PROV. (CF)	TOP OF BANK ELEVATION
BASIN #1	27.50	122"	17.33	19.33	7.67	23,893	59,733	21.40	60,052	27.00
BASIN #2	26.75	90"	19.25	21.25	4.75	27,428	68,569	24.00	69,809	26.00
BASIN #3	17.75	48"	13.75	15.75	3.25	8,896	22,239	17.00	23,440	19.00
BASIN #4	23.00	118"	13.17	15.17	7.83	24,237	60,594	19.80	60,869	20.50

INFILTRATION BASIN CROSS-SECTION
N.T.S.

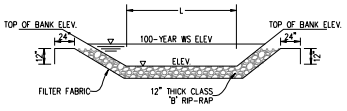

EMERGENCY SPILLWAY
N.T.S.

NOTES:

1. ALL IMPERVIOUS SITE AREA TO BE DRAINED TO PROPOSED STORM SEWER SYSTEM AND DISCHARGED TO INFILTRATION BASIN.
2. BASIN WILL BE PUMPED DOWN BY MECHANICAL MEANS IN CASE OF EMERGENCY.
3. PRIOR TO USE AS AN INFILTRATION BASIN, ALL ACCUMULATED SEDIMENT SHALL BE REMOVED AND PROPERLY DISPOSED OF. THEN THE APPROPRIATE MODIFICATIONS TO THE BASIN CAN BE INCORPORATED.
4. ESTABLISHED GRASS REQUIRED IN THE SWALES, DITCHES & BANKS OF THE INFILTRATION BASIN PRIOR TO ISSUANCE OF CERTIFICATE OF OCCUPANCY.

NORTH CAROLINA PROFESSIONAL ENGINEER SEAL 031315 GARRY S. PAPE
05/13/2019

GRAPHIC SCALE
20 0 20 40
1 inch = 20 ft.

No.	Revision	Date	By

Designer GSP	Scale 1" = 20'
Drawn By GSP	Date May 2019
License # P-0718	Job No. 2019-0005

PECAN GROVE PLANTATION
PHASE 6
Topsail Township Pender County North Carolina

INFILTRATION BASIN #2 DETAILS

PREPARED FOR:
Signature Westbrook NC, Ltd.
9337B Katy Freeway #377
Houston, TX 77024
713-223-3891

GSP CONSULTING, PLLC
ENGINEERING
6626 Gordon Road Unit C Wilmington, North Carolina 28411 tel: 910-442-7870 fax: 910-799-6659

Sheet No.
C-6.2

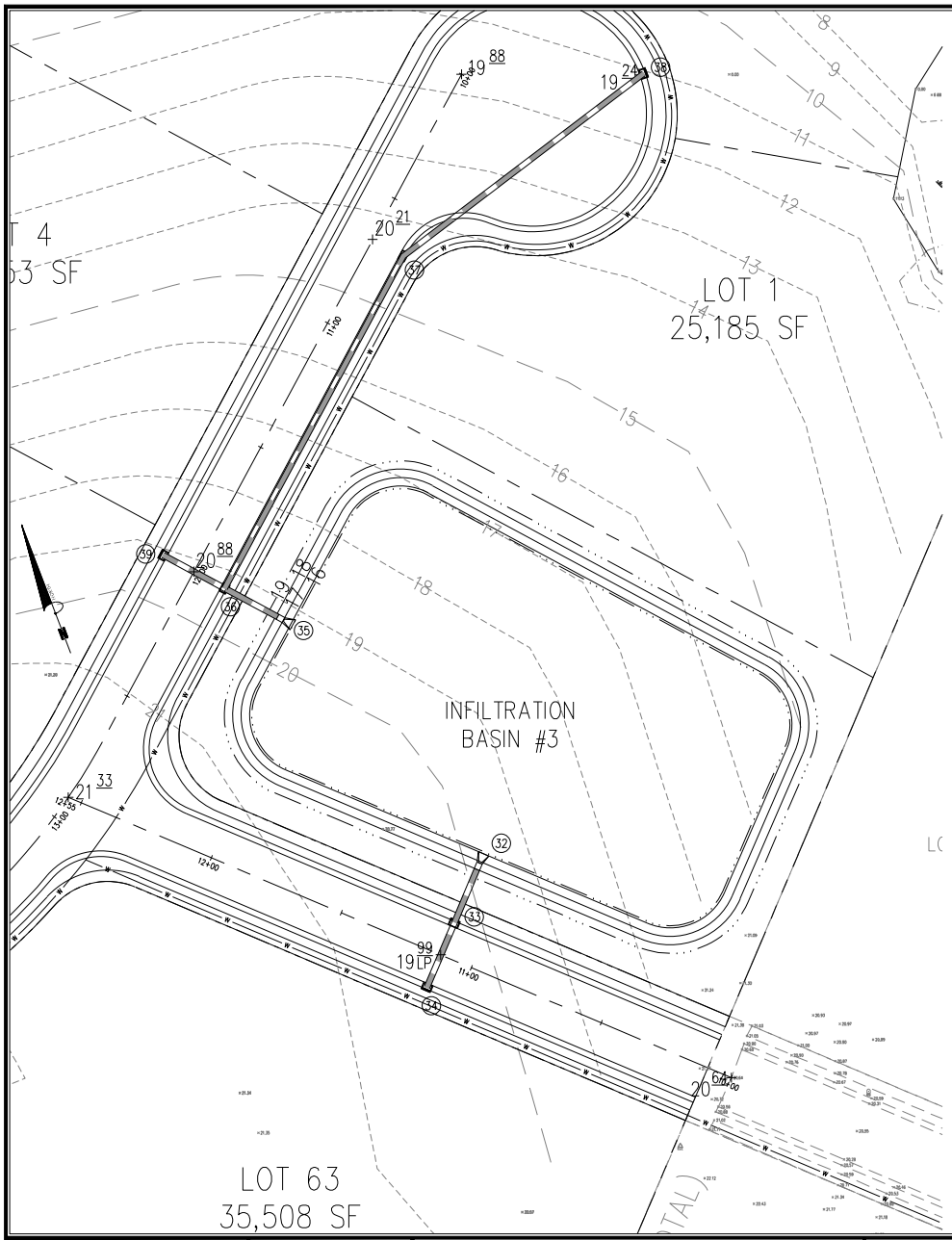

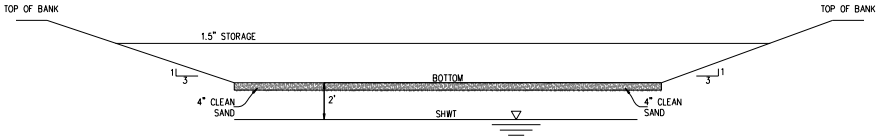

INFILTRATION BASIN	GROUND ELEVATION	SHWT DEPTH	SHWT ELEVATION	BASIN BOTTOM ELEVATION	BASIN DEPTH (FT)	1.5" STORAGE VOLUME REQ. (CF)	2.5 X 1.5" STORAGE VOLUME REQ. (CF)	STORAGE ELEVATION	STORAGE VOLUME PROV. (CF)	TOP OF BANK ELEVATION
BASIN #1	27.50	122"	17.33	19.33	7.67	23,893	59,733	21.40	60,052	27.00
BASIN #2	26.75	90"	19.25	21.25	4.75	27,428	68,569	24.00	69,809	26.00
BASIN #3	17.75	48"	13.75	15.75	3.25	8,896	22,239	17.00	23,440	19.00
BASIN #4	23.00	118"	13.17	15.17	7.83	24,237	60,594	19.80	60,869	20.50

INFILTRATION BASIN CROSS-SECTION
N.T.S.

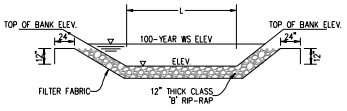

EMERGENCY SPILLWAY
N.T.S.

NOTES:

1. ALL IMPERVIOUS SITE AREA TO BE DRAINED TO PROPOSED STORM SEWER SYSTEM AND DISCHARGED TO INFILTRATION BASIN.
2. BASIN WILL BE PUMPED DOWN BY MECHANICAL MEANS IN CASE OF EMERGENCY.
3. PRIOR TO USE AS AN INFILTRATION BASIN, ALL ACCUMULATED SEDIMENT SHALL BE REMOVED AND PROPERLY DISPOSED OF. THEN THE APPROPRIATE MODIFICATIONS TO THE BASIN CAN BE INCORPORATED.
4. ESTABLISHED GRASS REQUIRED IN THE SWALES, DITCHES & BANKS OF THE INFILTRATION BASIN PRIOR TO ISSUANCE OF CERTIFICATE OF OCCUPANCY.

NORTH CAROLINA PROFESSIONAL SEAL 031315 ENGINEER GARRY S. PAPE
05/13/2019

GRAPHIC SCALE
20 0 20 40
1 inch = 20 ft.

No.	Revision	Date	By

Designer GSP	Scale 1" = 20'
Drawn By GSP	Date May 2019
License # P-0718	Job No. 2019-0005

PECAN GROVE PLANTATION
PHASE 6
Topsail Township Pender County North Carolina

INFILTRATION BASIN #3 DETAILS

PREPARED FOR:
Signature Westbrook NC, Ltd.
9337B Katy Freeway #377
Houston, TX 77024
713-223-3891

GSP CONSULTING, PLLC
ENGINEERING
6626 Gordon Road Unit C Wilmington, North Carolina 28411 tel: 910-442-7870 fax: 910-799-6659

Sheet No.
C-6.3

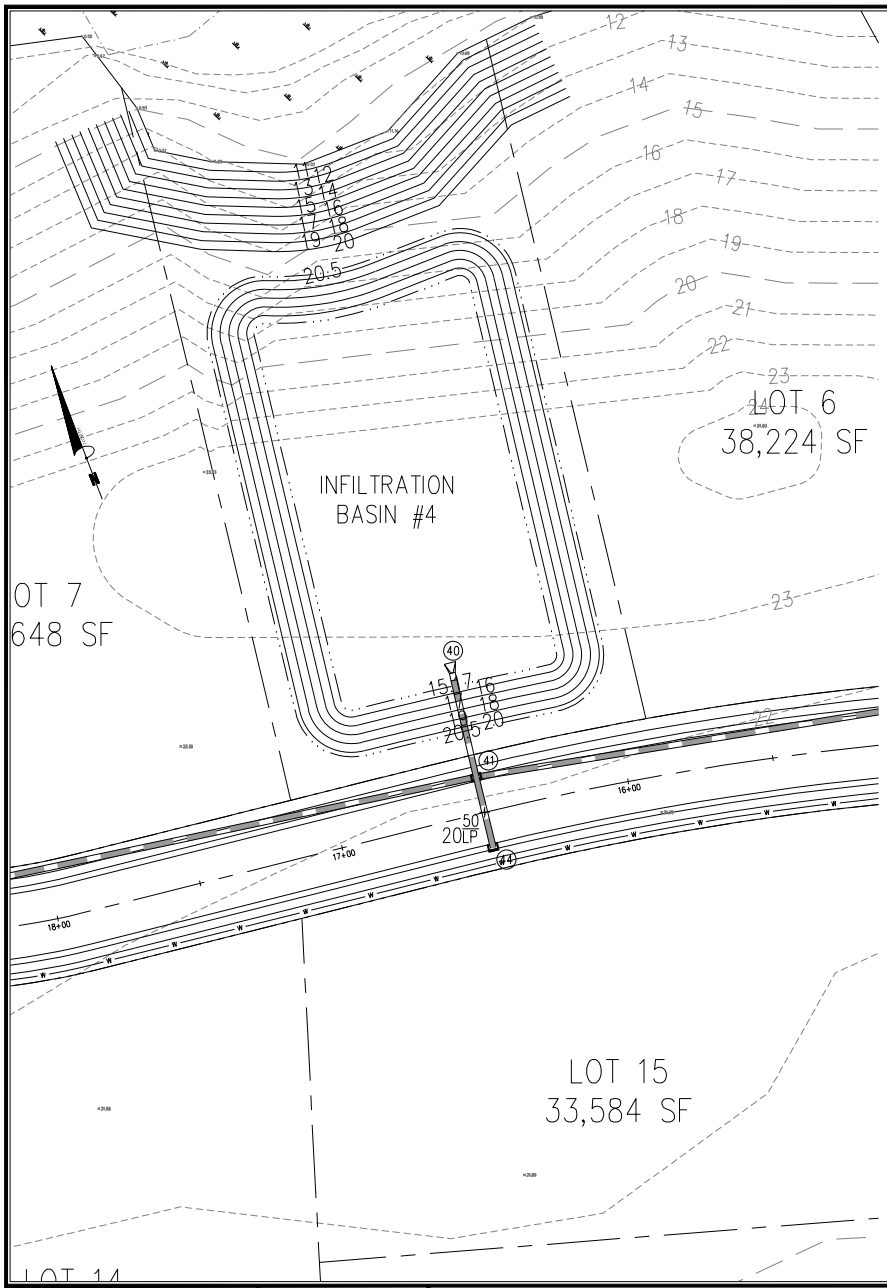

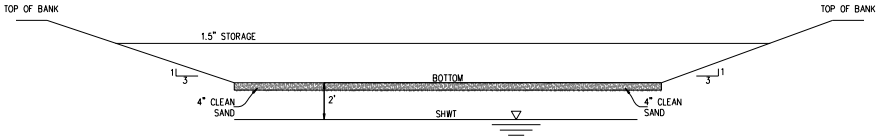

INFILTRATION BASIN	GROUND ELEVATION	SHWT DEPTH	SHWT ELEVATION	BASIN BOTTOM ELEVATION	BASIN DEPTH (FT)	1.5" STORAGE VOLUME REQ. (CF)	2.5 X 1.5" STORAGE VOLUME REQ. (CF)	STORAGE ELEVATION	STORAGE VOLUME PROV. (CF)	TOP OF BANK ELEVATION
BASIN #1	27.50	122"	17.33	19.33	7.67	23,893	59,733	21.40	60,052	27.00
BASIN #2	26.75	90"	19.25	21.25	4.75	27,428	68,569	24.00	69,809	26.00
BASIN #3	17.75	48"	13.75	15.75	3.25	8,896	22,239	17.00	23,440	19.00
BASIN #4	23.00	118"	13.17	15.17	7.83	24,237	60,594	19.80	60,869	20.50

INFILTRATION BASIN CROSS-SECTION
N.T.S.

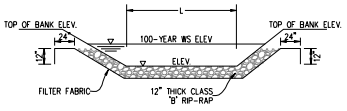

EMERGENCY SPILLWAY
N.T.S.

NOTES:

1. ALL IMPERVIOUS SITE AREA TO BE DRAINED TO PROPOSED STORM SEWER SYSTEM AND DISCHARGED TO INFILTRATION BASIN.
2. BASIN WILL BE PUMPED DOWN BY MECHANICAL MEANS IN CASE OF EMERGENCY.
3. PRIOR TO USE AS AN INFILTRATION BASIN, ALL ACCUMULATED SEDIMENT SHALL BE REMOVED AND PROPERLY DISPOSED OF. THEN THE APPROPRIATE MODIFICATIONS TO THE BASIN CAN BE INCORPORATED.
4. ESTABLISHED GRASS REQUIRED IN THE SWALES, DITCHES & BANKS OF THE INFILTRATION BASIN PRIOR TO ISSUANCE OF CERTIFICATE OF OCCUPANCY.

NORTH CAROLINA PROFESSIONAL SEAL 031315 ENGINEER GARRY S. PAPE
05/13/2019

GRAPHIC SCALE
20 0 20 40
1 inch = 20 ft.

No.	Revision	Date	By

Designer GSP	Scale 1" = 20'
Drawn By GSP	Date May 2019
License # P-0718	Job No. 2019-0005

PECAN GROVE PLANTATION
PHASE 6
Topsail Township — Pender County — North Carolina

INFILTRATION BASIN #4 DETAILS

PREPARED FOR:
Signature Westbrook NC, Ltd.
9337B Katy Freeway #377
Houston, TX 77024
713-223-3891

GSP CONSULTING, PLLC
ENGINEERING
6626 Gordon Road Unit C Wilmington, North Carolina 28411 tel: 910-442-7870 fax: 910-799-6659

Sheet No.
C-6.4

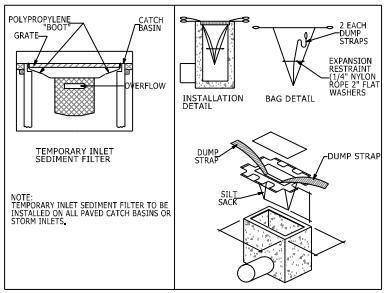

SILT SACK DETAIL

NOT TO SCALE

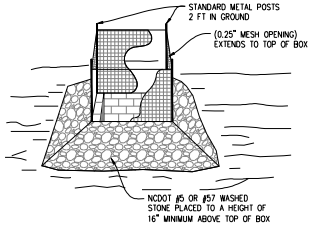

NOTES:

1. DRIVE 5-FOOT STEEL POSTS 2 FEET INTO THE GROUND SURROUNDING THE INLET. SPACE POSTS EVENLY AROUND THE PERIMETER OF THE INLET, A MAXIMUM OF 4 FEET APART.
2. SURROUND THE POSTS WITH WIRE MESH HARDWARE CLOTH. SECURE THE WIRE MESH TO THE STEEL POSTS AT THE TOP, MIDDLE, AND BOTTOM. PLACING A 1-FOOT FLAP OF THE WIRE MESH UNDER THE GRAVEL FOR ANCHORING IS RECOMMENDED.
3. PLACE CLEAN GRAVEL (NC DOT #5 OR #57 STONE) ON A 2:1 SLOPE WITH A MIN HEIGHT OF 16 INCHES AROUND THE WIRE, AND SMOOTH TO AN EVEN GRADE.

STANDARD INLET PROTECTION

NOT TO SCALE

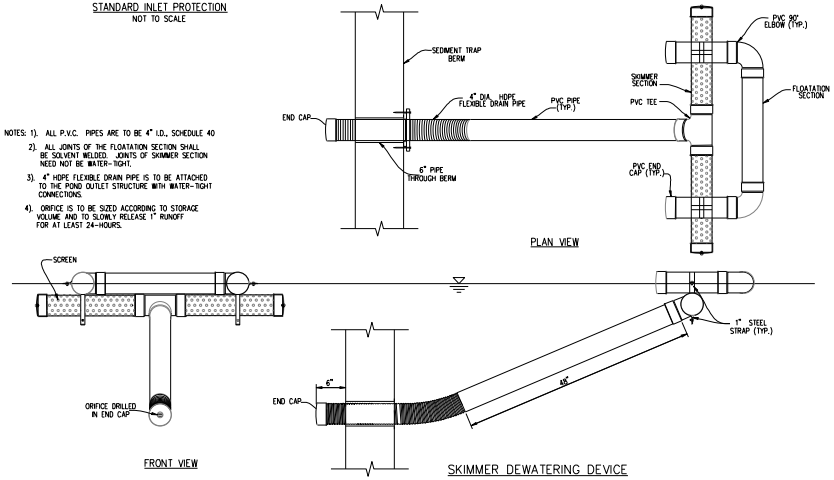

NOTES: 1). ALL P.V.C. PIPES ARE TO BE 4" I.D., SCHEDULE 40

2). ALL JOINTS OF THE FLOATATION SECTION SHALL BE SOLVENT WELDED. JOINTS OF SKIMMER SECTION NEED NOT BE WATER-TIGHT.

3). 4" HDPE FLEXIBLE DRAIN PIPE IS TO BE ATTACHED TO THE POND OUTLET STRUCTURE WITH WATER-TIGHT CONNECTIONS.

4). ORIFICE IS TO BE SIZED ACCORDING TO STORAGE VOLUME AND TO SLOWLY RELEASE 1" RUNOFF FOR AT LEAST 24-HOURS.

SKIMMER DEWATERING DEVICE

N.T.S.

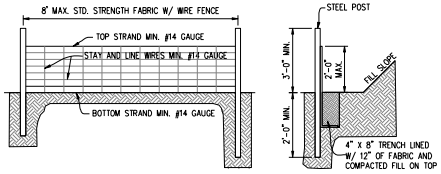

NOTES:

1. WIRE FENCE (IF USED) SHALL BE MINIMUM 14 GAUGE WITH A MAXIMUM MESH OPENING OF 6-INCHES.
2. SYNTHETIC FILTER FABRIC OF AT LEAST 95% BY WEIGHT OF POLYOLEFIN'S OR POLYESTER, WHICH IS CERTIFIED BY THE MANUFACTURER OR SUPPLIER AS CONFORMING TO THE REQUIREMENTS IN ASTM D 6461 AND ALSO SHOULD CONTAIN ULTRAVIOLET RAY INHIBITORS AND STABILIZERS ACCORDING TO ASTM D 4355.
3. SEE THE NC EROSION CONTROL MANUAL FOR SPECIFICATIONS INSTALLING SEDIMENT FENCE USING THE SLICING METHOD MACHINERY.

TEMPORARY SILT FENCE

NOT TO SCALE

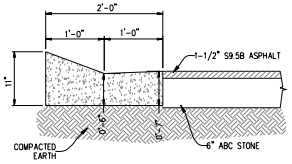

MODIFIED VALLEY GUTTER

N.T.S.

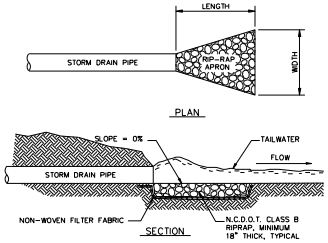

RIPRAP LOCATIONS	LENGTH (FT.)	UPSTREAM WIDTH (FT.)	DOWNSTREAM WIDTH (FT.)
15" CULVERT	7.5	3.75	5.0
18" CULVERT	9.0	4.5	6.0
24" CULVERT	12.0	6.0	8.0
30" CULVERT	15.0	7.5	10.0
36" CULVERT	18.0	9.0	12.0
48" CULVERT	24.0	12.0	16.0

RIP-RAP OUTLET PROTECTION

N.T.S.

SEQUENCE OF CONSTRCUTION

1. INSTALL TEMPORARY CONSTRUCTION ENTRANCE AS SHOWN ON EROSION & SEDIMENT CONTROL PLAN.

2. INSTALL PERIMETER CONTROLS (TEMPORARY SEDIMENT BASIN, SILT FENCE, TREE PROTECTION FENCING, ETC.) AS SHOWN ON THE EROSION & SEDIMENT CONTROL PLAN. THIS STEP NEEDS TO BE COMPLETED PRIOR TO UPSLOPE LAND DISTURBING ACTIVITIES.

3. THE EXISTING POND WILL ACT AS TEMPORARY SEDIMENT BASIN DURING CLEARING AND GRUBBING ACTIVITIES.

4. ONCE PERIMETER CONTROLS AND SEDIMENT TRAPPING MEASURES ARE INSTALLED CLEAR AND GRUB SITE WITHIN LIMITS OF DISTURBANCE. POND WILL BE PUMPED DOWN BY MECHANICAL MEANS AS NEEDED TO MUCK OUT SEDIMENT WHEN THE SEDIMENT REACHES 50% CAPACITY.

5. UPON BRINGING THE SITE TO ROUGH GRADE, STABILIZE ALL AREAS WITH TEMPORARY VEGETATION IF LEFT UNDISTURBED FOR 15 WORKING DAYS AN ALL SLOPES WITHIN 21 CALENDAR DAYS.

6. UPON BRINGING THE ROAD BEDS TO SUBGRADE ELEVATIONS, STABILIZE THE AREAS BY PLACING STONE BASE AS EARLY AS POSSIBLE.

7. FOR TEMPORARY VEGETATIVE STABILIZATION OF ALL DENUDED AREAS SEE NOTE REFERENCING THE EROSION CONTROL PROGRAM AND SPECIFICATIONS.

8. AFTER CONSTRUCTION OPERATIONS HAVE ENDED AND ALL DISTURBED AREAS HAVE STABILIZED, MECHANICAL SEDIMENT CONTROLS SHALL BE REMOVED. SEDIMENT FROM TEMPORARY SEDIMENT TRAPPING DEVICES SHALL BE DISPOSED OF BY SPREADING ON THE SITE OR HAULING AWAY IF NOT SUITABLE FOR FILL. ALL DENUDED AREAS ARE TO BE PERMANENTLY STABILIZED WITH PERMANENT VEGETATION.

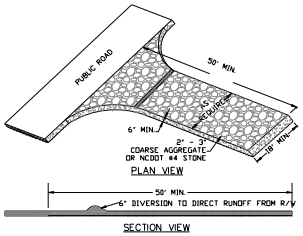

TEMPORARY CONSTRUCTION ENTRANCE

N.T.S.

NORTH CAROLINA PROFESSIONAL SEAL 031315 ENGINEER GARRY S. PAIR

05/13/2019

No.	Revision	Date	By

Designer GSP	Scale NO SCALE
Drawn By GSP	Date May 2019
License # P-0718	Job No. 2019-0005

PECAN GROVE PLANTATION
PHASE 6
Topsail Township Pender County North Carolina

STANDARD DETAILS

PREPARED FOR:
Signature Westbrook NC, Ltd.
9337B Katy Freeway #377
Houston, TX 77024
713-223-3891

GSP CONSULTING, PLLC
ENGINEERING
6626 Gordon Road Unit C Wilmington, North Carolina 28411 tel: 910-442-7870 fax: 910-799-6659

Sheet No. C-7

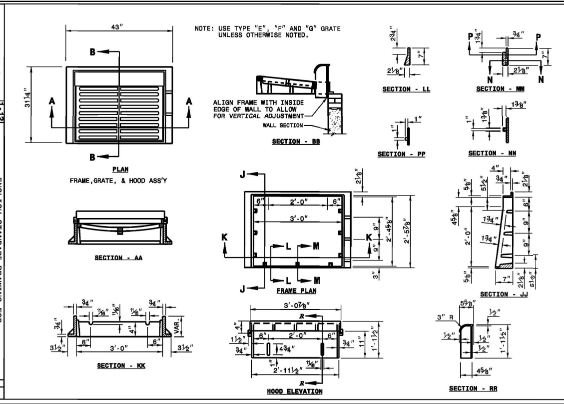

STATE OF NORTH CAROLINA
DEPT. OF TRANSPORTATION
DIVISION OF HIGHWAYS
RALEIGH, N.C.
1-12

ENGLISH STANDARD DRAWING FOR
FRAME, GRATES, AND HOOD
FOR USE ON STANDARD CATCH BASIN

SHEET 1 OF 2
840.03

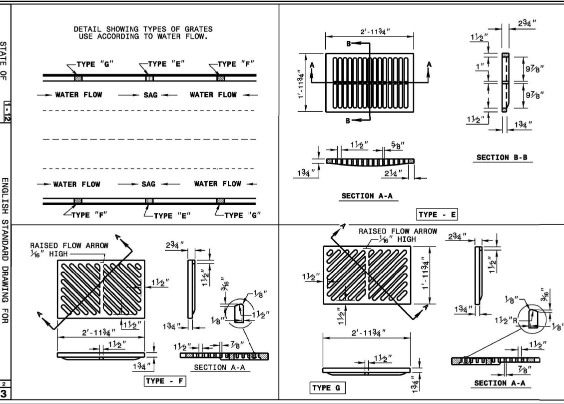

STATE OF NORTH CAROLINA
DEPT. OF TRANSPORTATION
DIVISION OF HIGHWAYS
RALEIGH, N.C.
1-12

ENGLISH STANDARD DRAWING FOR
FRAME, GRATES, AND HOOD
FOR USE ON STANDARD CATCH BASIN

SHEET 2 OF 2
840.03

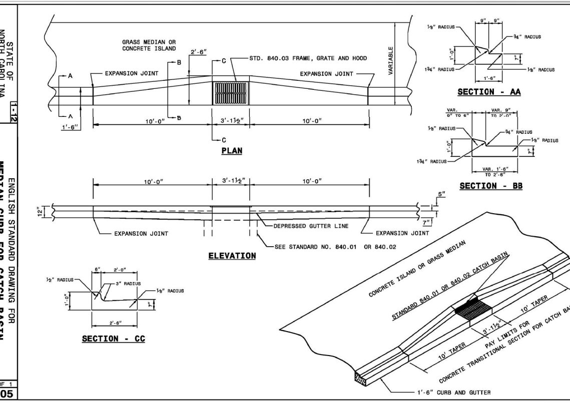

STATE OF NORTH CAROLINA
DEPT. OF TRANSPORTATION
DIVISION OF HIGHWAYS
RALEIGH, N.C.
1-12

ENGLISH STANDARD DRAWING FOR
MEDIAN CURB FOR CATCH BASIN
(FOR USE WITH 1'-6" CURB AND GUTTER)

SHEET 1 OF 1
852.05

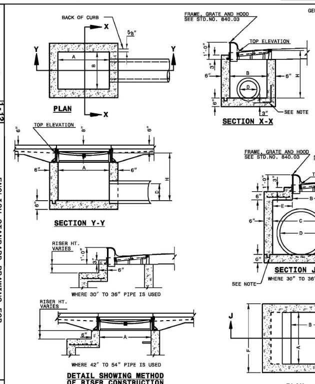

GENERAL NOTES:

USE CLASS "B" CONCRETE THROUGHOUT.

PROVIDE ALL CATCH BASINS OVER 3'-6" IN DEPTH WITH STEPS 12" ON CENTER. USE STEPS WHICH COMPLY WITH STD. DRAWING 840.66.

OPTIONAL CONSTRUCTION - MONOLITHIC POUR, 2" KEYWAY, OR #4 BAR DOWELS AT 12" CENTERS AS DIRECTED BY THE ENGINEER.

USE FORMS FOR THE CONSTRUCTION OF THE BOTTOM SLAB.

IF REINFORCED CONCRETE PIPE IS SET IN BOTTOM SLAB OF BOX, ADD TO SLAB AS SHOWN ON STD. NO. 840.00.

USE TYPE "E", "F" AND "G" GRATES UNLESS OTHERWISE INDICATED.

FOR 8'-0" IN HEIGHT OR LESS USE 6" WALLS AND BOTTOM SLAB. OVER 8'-0" TO 16'-0" IN HEIGHT USE 8" WALLS AND BOTTOM SLAB. ADJUST QUANTITIES ACCORDINGLY.

CONSTRUCT WITH PIPE CROWNS MATCHING.

CHAMFER ALL EXPOSED CORNERS 1".

DRAWING NOT TO SCALE.

STATE OF NORTH CAROLINA
DEPT. OF TRANSPORTATION
DIVISION OF HIGHWAYS
RALEIGH, N.C.
1-12

ENGLISH STANDARD DRAWING FOR
CONCRETE CATCH BASIN
12" THRU 54" PIPE

SHEET 1 OF 2
840.02

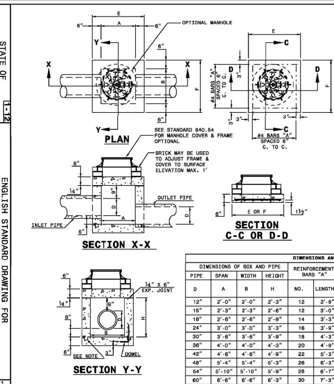

GENERAL NOTES:

CHAMFER ALL EXPOSED CORNERS 1".

USE CLASS "B" CONCRETE THROUGHOUT.

OPTIONAL CONSTRUCTION - MONOLITHIC POUR, 2" KEYWAY, OR #4 BAR DOWELS AT 12" CENTERS AS DIRECTED BY THE ENGINEER.

USE FORMS TO CONSTRUCT THE BOTTOM SLAB.

IF REINFORCED CONCRETE PIPE IS SET IN BASE SLAB OF BOX, ADD TO BASE AS SHOWN ON STANDARD NO. 840.00.

PROVIDE ALL JUNCTION BOXES OVER 3'-6" IN DEPTH WITH STEPS 12" ON CENTERS IN ACCORDANCE WITH STD. NO. 840.66.

ADJUST THE STEEL, CONCRETE AND BRICK MASONRY QUANTITIES TO INCLUDE THE ADDITION OF THE MANHOLE (I.E. DIAGONAL BARS SHORTENED AROUND OPENING IN TOP SLAB, ADDITIONAL VARIABLE HEIGHT BRICK MASONRY, OPENING IN TOP SLAB.)

MAX. DEPTH OF THIS STRUCTURE FROM TOP OF BOTTOM SLAB TO TOP ELEVATION IS 12 FEET.

DIMENSIONS AND QUANTITIES FOR CONCRETE JUNCTION BOXES

DIMENSIONS OF BOX AND PIPE				REINFORCEMENT BARS "A"		TOP SLAB DIMENSIONS		CUBIC YARDS IN BOX			TOTAL QUANTITIES BOX AND SLABS		DEDUCTIONS FOR ONE PIPE CU.YDS.	
PIPE	SPAN	WIDTH	HEIGHT											
D	A	B	H	NO.	LENGTH	E	F	TOP SLAB	BOTTOM SLAB	WALL/ FT. OF HT.	LBS. REINF	CU. YDS. MIN. "H"	C.S.	R.C.
12"	2'-0"	2'-0"	2'-3"	12	2'-9"	3'-0"	3'-0"	0.167	0.167	0.185	22	0.750	0.015	0.024
15"	2'-3"	2'-3"	2'-6"	12	3'-0"	3'-3"	3'-3"	0.196	0.196	0.204	24	0.902	0.023	0.036
18"	2'-6"	2'-6"	2'-9"	14	3'-3"	3'-6"	3'-6"	0.227	0.227	0.222	30	1.065	0.033	0.049
24"	3'-0"	3'-0"	3'-3"	16	3'-9"	4'-0"	4'-0"	0.296	0.296	0.259	40	1.434	0.059	0.085
30"	3'-6"	3'-6"	3'-9"	18	4'-3"	4'-6"	4'-6"	0.375	0.375	0.296	51	1.860	0.092	0.127
36"	4'-0"	4'-0"	4'-3"	20	4'-9"	5'-0"	5'-0"	0.463	0.463	0.333	64	2.341	0.132	0.178
42"	4'-6"	4'-6"	4'-9"	22	5'-3"	5'-6"	5'-6"	0.560	0.560	0.370	77	2.878	0.180	0.243
48"	5'-4"	5'-4"	5'-3"	26	6'-3"	6'-4"	6'-4"	0.743	0.743	0.407	111	3.623	0.235	0.317
54"	5'-10"	5'-10"	5'-9"	28	6'-7"	6'-10"	6'-10"	0.865	0.865	0.444	126	4.283	0.297	0.401
60"	6'-6"	6'-6"	6'-3"	30	7'-3"	7'-6"	7'-6"	1.042	1.042	0.481	145	5.090	0.367	0.495
66"	7'-1"	7'-1"	6'-9"	32	7'-10"	8'-1"	8'-1"	1.210	1.210	0.518	169	5.917	0.444	0.589

STATE OF NORTH CAROLINA
DEPT. OF TRANSPORTATION
DIVISION OF HIGHWAYS
RALEIGH, N.C.
1-12

ENGLISH STANDARD DRAWING FOR
CONCRETE JUNCTION BOX
(WITH OPTIONAL MANHOLE)
12" THRU 66" PIPE

SHEET 1 OF 1
840.31

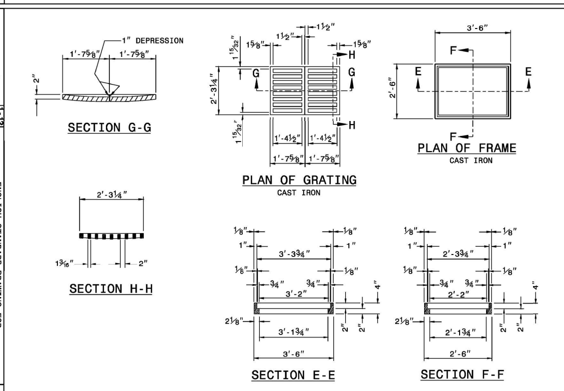

STATE OF NORTH CAROLINA
DEPT. OF TRANSPORTATION
DIVISION OF HIGHWAYS
RALEIGH, N.C.
1-12

ENGLISH STANDARD DRAWING FOR
DROP INLET FRAME AND GRATES
FOR USE WITH STD. DWG.S 840.14 AND 840.15

SHEET 1 OF 1
840.16

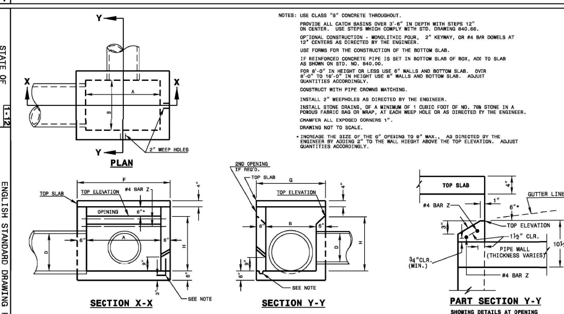

NOTES: USE CLASS "B" CONCRETE THROUGHOUT.

PROVIDE ALL CATCH BASINS OVER 3'-6" IN DEPTH WITH STEPS 12" ON CENTER. USE STEPS WHICH COMPLY WITH STD. DRAWING 840.66.

OPTIONAL CONSTRUCTION - MONOLITHIC POUR, 2" KEYWAY, OR #4 BAR DOWELS AT 12" CENTERS AS DIRECTED BY THE ENGINEER.

USE FORMS FOR THE CONSTRUCTION OF THE BOTTOM SLAB.

IF REINFORCED CONCRETE PIPE IS SET IN BOTTOM SLAB OF BOX, ADD TO SLAB AS SHOWN ON STD. NO. 840.00.

FOR 8'-0" IN HEIGHT OR LESS USE 6" WALLS AND BOTTOM SLAB. OVER 8'-0" TO 16'-0" IN HEIGHT USE 8" WALLS AND BOTTOM SLAB. ADJUST QUANTITIES ACCORDINGLY.

CONSTRUCT WITH PIPE CROWNS MATCHING.

INSTALL 2" WEEPHOLES AS DIRECTED BY THE ENGINEER.

INSTALL STONE DRAINS, OF A MINIMUM OF 1 CUBIC FOOT OF NO. 78M STONE IN A POROUS FABRIC BAG OR WRAP, AT EACH WEEP HOLE OR AS DIRECTED BY THE ENGINEER.

CHAMFER ALL EXPOSED CORNERS 1".

DRAWING NOT TO SCALE.

* INCREASE THE SIZE OF THE 6" OPENING TO 8" MAX., AS DIRECTED BY THE ENGINEER BY ADDING 2" TO THE WALL HIEGHT ABOVE THE TOP ELEVATION. ADJUST QUANTITIES ACCORDINGLY.

MIN. DIMENSIONS AND QUANTITIES FOR CONCRETE CATCH BASIN (BASED ON MIN. HEIGHT, H)

DIM'S OF BOX & PIPE				REINFORCING						TOP & BOT. SLAB DIMENSIONS		CU. YDS. CONC. IN BOX			TOTAL QUANTITIES BOX & SLABS		DEDUCTION ONE PIPE		DED. ONE 6" THROAT OPENING
PIPE	SPAN	WIDTH	HEIGHT	BARS - X		BARS - Y		BARS - Z											
D	A	B	H	NO.	LENGTH	NO.	LENGTH	NO.	LENGTH	F	G	TOP SLAB	BOT. SLAB	WALL/FT. HT.	LBS. REINF.	YD^3 (MIN H)	C.S.	R.C.	YD^3
12"	3'-6"	2'-3"	1'-10"	4	3'-0"	6	4'-3"	2	4'-3"	4'-6"	3'-3"	0.181	0.271	0.250	27	1.046	0.015	0.032	0.046
15"	3'-6"	2'-3"	2'-1"	4	3'-0"	6	4'-3"	2	4'-3"	4'-6"	3'-3"	0.181	0.271	0.250	27	1.108	0.023	0.036	0.046
18"	4'-0"	2'-8"	2'-4"	5	3'-5"	7	4'-9"	2	4'-9"	5'-0"	3'-8"	0.226	0.340	0.284	35	1.379	0.033	0.049	0.053
24"	4'-0"	2'-8"	2'-10"	5	3'-5"	7	4'-9"	2	4'-9"	5'-0"	3'-8"	0.226	0.340	0.284	35	1.521	0.059	0.085	0.053
30"	4'-0"	3'-6"	3'-4"	5	4'-3"	9	4'-9"	2	4'-9"	5'-0"	4'-6"	0.278	0.417	0.315	43	1.916	0.092	0.127	0.053
36"	4'-6"	4'-0"	3'-10"	5	4'-9"	10	5'-3"	2	5'-3"	5'-6"	5'-0"	0.340	0.510	0.352	51	2.390	0.132	0.178	0.059
42"	5'-0"	4'-6"	4'-4"	5	5'-3"	12	5'-9"	2	5'-9"	6'-0"	5'-6"	0.407	0.611	0.389	64	2.914	0.180	0.243	0.066
48"	5'-0"	5'-0"	4'-10"	5	5'-9"	13	5'-9"	2	5'-9"	6'-0"	6'-0"	0.444	0.666	0.407	68	3.298	0.235	0.317	0.066

STATE OF NORTH CAROLINA
DEPT. OF TRANSPORTATION
DIVISION OF HIGHWAYS
RALEIGH, N.C.
1-12

ENGLISH STANDARD DRAWING FOR
CONCRETE OPEN THROAT CATCH BASIN
12" THRU 48" PIPE

SHEET 1 OF 2
840.04

NORTH CAROLINA PROFESSIONAL SEAL 031315 ENGINEER GARRY S. PAPE 05/13/2019

No.	Revision	Date	By

Designer	GSP	Scale	NO SCALE
Drawn By	GSP	Date	May 2019
License #	P-0718	Job No.	2019-0005

PECAN GROVE PLANTATION PHASE 6

Topsail Township · Pender County · North Carolina

STANDARD DETAILS

PREPARED FOR:
Signature Westbrook NC, Ltd.
9337B Katy Freeway #377
Houston, TX 77024
713-822-3891

GSP CONSULTING, PLLC
ENGINEERING
6626 Gordon Road Unit C Wilmington, North Carolina 28411 tel: 910-442-7870 fax: 910-799-6659

Sheet No. C-8

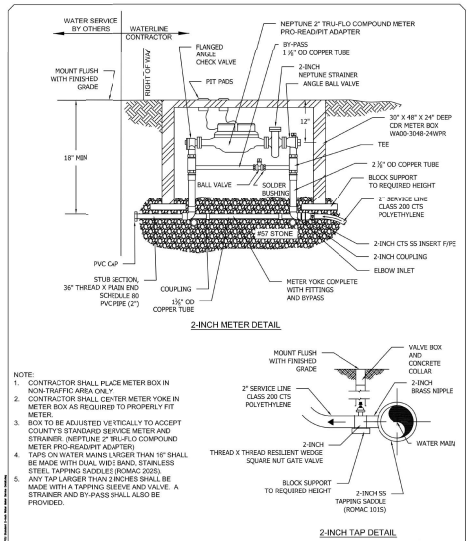

NOTE:
1. CONTRACTOR SHALL PLACE METER BOX IN NON-TRAFFIC AREA ONLY
2. CONTRACTOR SHALL CENTER METER YOKE IN METER BOX AS REQUIRED TO PROPERLY FIT METER.
3. BOX TO BE ADJUSTED VERTICALLY TO ACCEPT COUNTY'S STANDARD SERVICE METER AND STRAINER. (NEPTUNE 2" TRU-FLO COMPOUND METER PRO-READ/PIT ADAPTER)
4. TAPS ON WATER MAINS LARGER THAN 16" SHALL BE MADE WITH DUAL WIDE BAND, STAINLESS STEEL TAPPING SADDLES (ROMAC 202S).
5. ANY TAP LARGER THAN 2 INCHES SHALL BE MADE WITH A TAPPING SLEEVE AND VALVE. A STRAINER AND BY-PASS SHALL ALSO BE PROVIDED.

STANDARD 2-INCH WATER SERVICE DETAIL

NOT TO SCALE

PENDER COUNTY UTILITIES
605 EAST FREMONT STREET
BURGAW, NC 28425

2-INCH WATER SERVICE
STANDARD DETAIL
VERSION #1 - AUGUST 2010

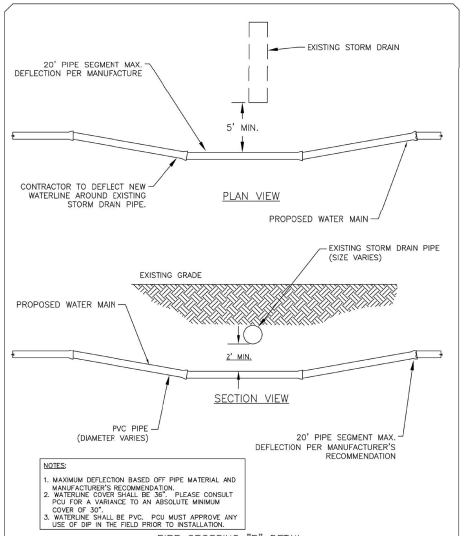

NOTES:
1. MAXIMUM DEFLECTION BASED OFF PIPE MATERIAL AND MANUFACTURER'S RECOMMENDATION.
2. WATERLINE COVER SHALL BE 36". PLEASE CONSULT PCU FOR A VARIANCE TO AN ABSOLUTE MINIMUM COVER OF 30".
3. WATERLINE SHALL BE PVC. PCU MUST APPROVE ANY USE OF DIP IN THE FIELD PRIOR TO INSTALLATION.

PIPE CROSSING "B" DETAIL

NOT TO SCALE

PENDER COUNTY UTILITIES
605 EAST FREMONT STREET
BURGAW, NC 28425

PIPE CROSSING "B"
STANDARD DETAIL
VERSION #1 - SEPTEMBER 2015

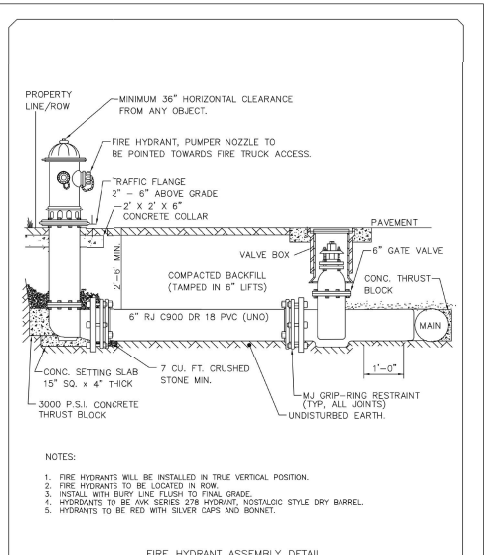

NOTES:
1. FIRE HYDRANTS WILL BE INSTALLED IN TRUE VERTICAL POSITION.
2. FIRE HYDRANTS TO BE LOCATED IN ROW.
3. INSTALL WITH BURY LINE FLUSH TO FINAL GRADE.
4. HYDRANTS TO BE AVK SERIES 278 HYDRANT, NOSTALGIC STYLE DRY BARREL.
5. HYDRANTS TO BE RED WITH SILVER CAPS AND BONNET.

FIRE HYDRANT ASSEMBLY DETAIL

NOT TO SCALE

PENDER COUNTY UTILITIES
605 EAST FREMONT STREET
BURGAW, NC 28425

FIRE HYDRANT ASSEMBLY
STANDARD DETAIL
VERSION #1 - SEPTEMBER 2015

NOTE:
1. A BLOW OFF MARKER SHALL BE PLACED ON THE RIGHT OF WAY AT EACH BLOW.
2. BLOW OFF MARKER TO BE SAME DESIGN AS VALVE MARKER EXCEPT DENOTE "BO" ON MARKER RATHER THAN "WV"

NOTES:
1. ALL PVC SHALL BE RESTRAINED PER THE RESTRAINED LENGTH SCHEDULE PROVIDED ELSEWHERE.

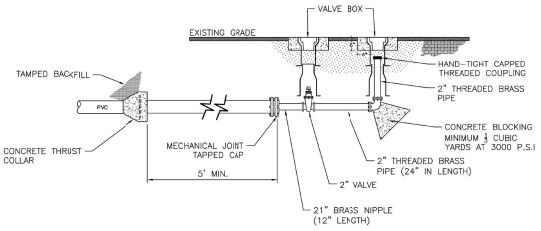

PERMANENT BLOW-OFF ASSEMBLY DETAIL

NOT TO SCALE

PENDER COUNTY UTILITIES
605 EAST FREMONT STREET
BURGAW, NC 28425

PERMANENT BLOW-OFF ASSEMBLY
STANDARD DETAIL
VERSION #1 - SEPTEMBER 2015

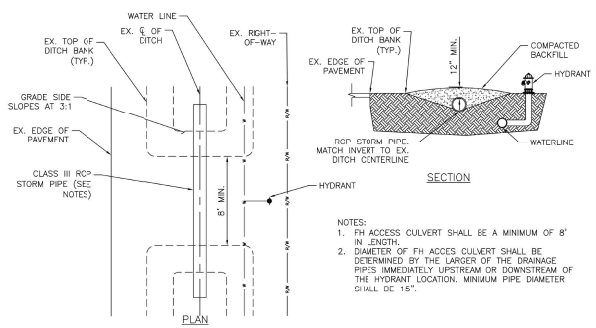

NOTES:
1. FH ACCESS CULVERT SHALL BE A MINIMUM OF 8' IN LENGTH.
2. DIAMETER OF FH ACCES CULVERT SHALL BE DETERMINED BY THE LARGER OF THE DRAINAGE PIPES IMMEDIATELY UPSTREAM OR DOWNSTREAM OF THE HYDRANT LOCATION. MINIMUM PIPE DIAMETER SHALL BE 15".

FIRE HYDRANT ACCESS DETAIL

NOT TO SCALE

PENDER COUNTY UTILITIES
605 EAST FREMONT STREET
BURGAW, NC 28425

FIRE HYDRANT ACCESS
STANDARD DETAIL
VERSION #1 - SEPTEMBER 2015

NOTE:
1. ALL PVC SHALL BE RESTRAINED PER THE RESTRAINED LENGTH SCHEDULE PROVIDED ELSEWHERE.
2. A BLOW OFF MARKER SHALL BE PLACED ON THE RIGHT OF WAY AT EACH BLOW.
3. BLOW OFF MARKER TO BE SAME DESIGN AS VALVE MARKER EXCEPT DENOTE "BO" ON MARKER RATHER THAN "WV"

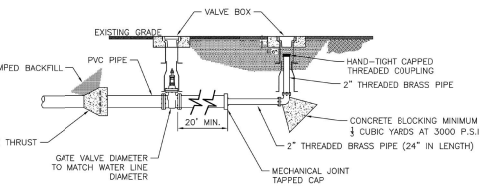

TEMPORARY BLOW-OFF ASSEMBLY DETAIL

NOT TO SCALE

PENDER COUNTY UTILITIES
605 EAST FREMONT STREET
BURGAW, NC 28425

TEMPORARY BLOW-OFF ASSEMBLY
STANDARD DETAIL
VERSION #1 - SEPTEMBER 2015

NORTH CAROLINA PROFESSIONAL SEAL 031315 ENGINEER GARY S. PAPE
05/03/2019

No.	Revision	Date	By

Designer GSP	Scale NO SCALE
Drawn By GSP	Date May 2019
License # P-0718	Job No. 2019-0005

PECAN GROVE PLANTATION PHASE 6

Topsail Township — Pender County — North Carolina

PENDER COUNTY UTILITIES DETAILS

PREPARED FOR:
Signature Westbrook NC, Ltd.
9337B Katy Freeway #377
Houston, TX 77024
713-223-3891

GSP CONSULTING, PLLC
ENGINEERING
6626 Gordon Road Unit C Wilmington, North Carolina 28411 tel: 910-442-7870 fax: 910-799-6659

Sheet No.
C-9

Restrained Length In Feet Each Side of Fitting Joint

PIPE DIAMETER (INCHES)	D. I. P 90°	D. I. P 45°	D. I. P 22.5°	D. I. P 11.25°	P V C 90°	P V C 45°	P V C 22.5°	P V C 11.25°
3"	30'	15'	10'	5'	40'	20'	10'	5'
4"	35'	15'	10'	5'	50'	25'	15'	10'
6"	55'	25'	10'	5'	80'	35'	20'	10'
8"	65'	30'	15'	10'	90'	40'	20'	10'
10"	80'	35'	20'	10'	110'	50'	25'	15'
12"	95'	40'	20'	10'	130'	55'	30'	15'
16"	120'	50'	25'	15'	165'	70'	35'	20'
20"	150'	60'	30'	15'	200'	85'	40'	20'
24"	180'	70'	35'	20'	210'	90'	45'	25'
30"	190'	80'	40'	20'	250'	100'	50'	25'
36"	220'	90'	40'	25'	0	0	0	0
42"	245'	100'	50'	25'	0	0	0	0
48"	260'	120'	60'	30'	0	0	0	0

Restrained lengths for valves, dead ends and branches from tees shall be the same as for 90° (degree) bends

Restrained Length In Feet For Reducer

PIPE DIAMETER (INCHES)	3"	4"	6"	8"	10"	12"	16"	20"	24"	30"
3"	0	0	0	0	0	0	0	0	0	0
4"	40'	0	0	0	0	0	0	0	0	0
6"	50'	45'	0	0	0	0	0	0	0	0
8"	75'	70'	40'	0	0	0	0	0	0	0
10"	95'	90'	70'	45'	0	0	0	0	0	0
12"	120'	115'	100'	70'	40'	0	0	0	0	0
16"	160'	155'	140'	120'	100'	70'	0	0	0	0
20"	200'	195'	185'	170'	155'	130'	75'	0	0	0
24"	160'	155'	150'	140'	130'	120'	90'	50'	0	0
30"	190'	190'	185'	180'	170'	160'	120'	100'	70'	0
36"	225'	220'	215'	210'	205'	195'	180'	150'	120'	70'
42"	245'	240'	235'	230'	225'	220'	205'	180'	150'	100'
48"	255'	250'	245'	240'	235'	230'	215'	190'	170'	120'

Length of restrained joint for larger diameter pipe

NOTES:
1. PENDER COUNTY STANDARD RESTRAINT METHOD IS MJ "GRIP RING" TYPE. ALL RJ TO BE MJ "GRIP RING" TYPE, UNLESS SPECIFICALLY APPROVED BY PCU IN WRITING.
2. ALL FITTINGS AND JOINTS SHALL BE RESTRAINED JOINT.
3. "L" ABOVE IS GIVEN IN FEET FROM FITTING JOINT.

PENDER COUNTY UTILITIES
605 EAST FREMONT STREET
BURGAW, NC 28425

RESTRAINED JOINT TABLE
STANDARD DETAIL
VERSION #1 - OCTOBER 2015

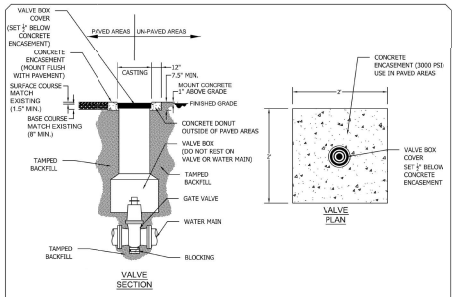

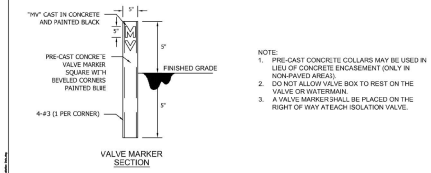

NOTE:
1. PRE-CAST CONCRETE COLLARS MAY BE USED IN LIEU OF CONCRETE ENCASEMENT (ONLY IN NON-PAVED AREAS).
2. DO NOT ALLOW VALVE BOX TO REST ON THE VALVE OR WATERMAIN.
3. A VALVE MARKER SHALL BE PLACED ON THE RIGHT OF WAY AT EACH ISOLATION VALVE.

VALVE INSTALLATION DETAIL
NOT TO SCALE

PENDER COUNTY UTILITIES
605 EAST FREMONT STREET
BURGAW, NC 28425

VALVE INSTALLATION
STANDARD DETAIL
VERSION #2 - SEPTEMBER 2015

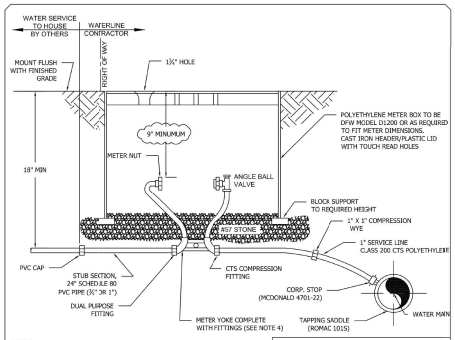

NOTE:
1. CONTRACTOR SHALL PLACE METER BOX IN NON-TRAFFIC AREA ONLY.
2. ALL TAPS TO BE MADE ON THE TOP QUARTER OF THE WATER MAIN.
3. CONTRACTOR SHALL CENTER METER YOKE IN METER BOX.
4. MCDONALD 26-702WXQ 33 (¾") MCDONALD 26-410WXQ 44 (1")
5. BOX TO BE ADJUSTED VERTICALLY TO ACCEPT COUNTY'S STANDARD SERVICE METER. (NEPTUNE T-10, PRO READ REGISTER, R900 MIU)
6. METER TO BE SET BY COUNTY UPON RECEIPT OF WATER SERVICE FEES, AND SATISFACTORY INSPECTION OF WATER SERVICE TO HOUSE.
7. TAPS ON WATER MAINS LARGER THAN 16" SHALL BE MADE WITH DUAL WIDE BAND, STAINLESS STEEL TAPPING SADDLES (ROMAC 202S).
8. 1.2" METERS REQUIRE 2" TAP AND 2" SQUARE NUT GATE VALVE PER 2" METER DETAIL. REDUCE TO 1.2" SERVICE PIPE.
9. INSTALL WYE TO PROVIDE A DOMESTIC METER SETTER AND IRRIGATION METER SETTER PER SPLIT SERVICE INSET.

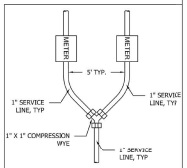

WYE PLAN VIEW FOR WATER/IRRIGATION SPLIT SERVICE

STANDARD WATER SERVICE DETAIL
NOT TO SCALE

PENDER COUNTY UTILITIES
605 EAST FREMONT STREET
BURGAW, NC 28425

WATER SERVICE (¾" - 1")
STANDARD DETAIL
VERSION #3 - SEP 2015

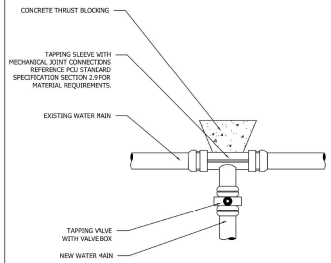

TAPPING SLEEVE AND VALVE ASSEMBLY DETAIL
NOT TO SCALE

PENDER COUNTY UTILITIES
605 EAST FREMONT STREET
BURGAW, NC 28425

TAPPING SLEEVE AND VALVE ASSEMBLY
STANDARD DETAIL
VERSION #2 - SEPTEMBER 2015

NORTH CAROLINA PROFESSIONAL SEAL 031315 ENGINEER CHARLES S. PIKE
05/13/2019

No.	Revision	Date	By

Designer GSP	Scale NO SCALE
Drawn By GSP	Date May 2019
License # P-0718	Job No. 2019-0005

PECAN GROVE PLANTATION PHASE 6

Topsail Township — Pender County — North Carolina

PENDER COUNTY UTILITIES DETAILS

PREPARED FOR:
Signature Westbrook NC, Ltd.
93378 Katy Freeway #377
Houston, TX 77024
713-223-3891

GSP CONSULTING, PLLC
ENGINEERING
6626 Gordon Road Unit C Wilmington, North Carolina 28411 tel: 910-442-7870 fax: 910-799-6659

Sheet No.
C-10