PENDER COUNTY

ROCKY POINT / TOPSAIL WATER AND SEWER DISTRICT

HAMPSTEAD / SCOTT'S HILL WELL PROJECT

ISSUED FOR BID -

NOT FOR CONSTRUCTION

APRIL 2020

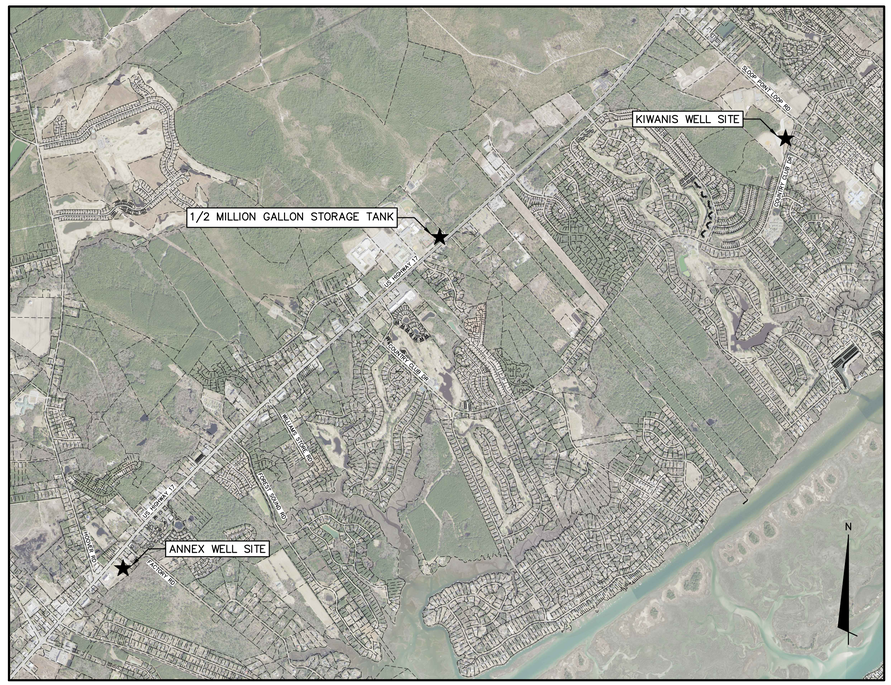

VICINITY MAP

NOT TO SCALE

INDEX

COVER	G00.0
PROJECT SITE PLAN	G01.0
GENERAL NOTES	G02.0
ANNEX - WELL NO.6 - EXISTING CONDITIONS	C01.0
ANNEX - WELL NO.6 - PROPOSED WELL SITE	C02.0
KIWANIS - WELL NO.4 - EXISTING CONDITIONS	C03.0
KIWANIS - WELL NO.4 - PROPOSED WELL SITE	C04.0
WELL HOUSE PLAN AND SECTIONS	M01.0
WELL DETAILS	M02.0
STRUCTURAL GENERAL NOTES, DESIGN LOADS, CRITERIA & LEGEND	S0.0
WELL HOUSE TYPICAL FOUNDATION & ROOF PLANS	S1.0
WELL HOUSE SECTIONS & DETAILS	S1.1
GENERATOR FOUNDATION PLAN, SECTIONS & DETAILS	S2.0
TYPICAL PRECAST BUILDING ELEVATIONS AND DETAILS	B01.0
GENERAL NOTES, SYMBOLS, LEGENDS AND ABBREVIATIONS	E0.0
KIWANIS - WELL NO.4 POWER AND CONTROL RISER DIAGRAM	E1.0
KIWANIS - WELL NO.4 ELECTRICAL SITE PLAN	E1.1
ANNEX - WELL NO.6 POWER AND CONTROL RISER DIAGRAM	E3.0
ANNEX - WELL NO.6 ELECTRICAL SITE PLAN	E3.1
PANEL SCHEDULES AND LOAD TABLES	E4.0
TYPICAL WELL HOUSE POWER AND GROUNDING PLAN	E5.0
TYPICAL MOTOR-CONTROL SCHEMATICS	E6.0
TYPICAL INSTALLATION DETAILS	E7.0
DETAILS	D01.0
DETAILS	D02.0
PENDER COUNTY UTILITIES - STANDARD DETAILS	D03.0

NORTH CAROLINA PROFESSIONAL SEAL 025512 ENGINEER ANTHONY W. BOAHEN 4-1-20

McKIM&CREED

243 N. Front Street
Wilmington, North Carolina 28401
Phone: (910) 343-1048, Fax: (910) 251-8282

NC License# F-1222
www.mckimcreed.com

COUNTY OF PENDER

PENDER COUNTY

ROCKY POINT/TOPSAIL
WATER AND SEWER DISTRICT

REV.NO.	DESCRIPTION	DATE
C	ISSUED FOR BID - NOT FOR CONSTRUCTION	2020.04
B	FINAL DESIGN - NOT FOR CONSTRUCTION	2020.03
A	PRELIMINARY DESIGN - NOT FOR CONSTRUCTION	2019.12

REVISIONS

NORTH CAROLINA PROFESSIONAL SEAL 025512 ENGINEER ANTHONY W. BOAHN
4-7-20

McKIM&CREED
Venture IV Building, Suite 500
1730 Varsity Drive
Raleigh, North Carolina 27606
Phone: (919) 233-8091, Fax: (919) 233-8031
NC License# F-1222
www.mckimcreed.com

COUNTY OF PENDER

PENDER COUNTY

ROCKY POINT/TOPSAIL
WATER AND SEWER DISTRICT

HAMPSTEAD / SCOTT'S HILL WELL PROJECT

GENERAL

PROJECT SITE PLAN

PROJ. START DATE:	2019.12
MCE PROJ. #	00542-0079
DRAWN	MTN
DESIGNED	STM
CHECKED	SJK
PROJ. MGR.	SJK

SCALE
HORIZONTAL: 1" = 800'
VERTICAL: N/A

G01.0
DRAWING NUMBER
C
REVISION

STATUS: ISSUED FOR BID
NOT FOR CONSTRUCTION

I:\00542\0079\WATER\80-DRAWINGS\GENERAL\G01.0-005420079.DWG 04/21/2020 08:25:58 MORGAN NORVILLE

NOTES:

1. ALL WORK SHALL COMPLY WITH APPLICABLE STATE, FEDERAL, AND LOCAL CODES, AND ALL NECESSARY LICENSES AND PERMITS SHALL BE OBTAINED BY THE CONTRACTOR AT HIS EXPENSE, UNLESS PREVIOUSLY OBTAINED BY THE OWNER AND PROVIDED AT THE PRE CONSTRUCTION CONFERENCE.

2. DEVIATION FROM THESE PLANS AND NOTES WITHOUT THE PRIOR WRITTEN CONSENT BY THE OWNER OR HIS REPRESENTATIVE OR THE ENGINEER MAY BE CAUSE FOR WORK TO BE UNACCEPTABLE.

3. ALL PIPE LINE CONSTRUCTION SHALL CONFORM TO NCDEQ REGULATIONS, AND TO PENDER COUNTY UTILITIES TECHNICAL STANDARDS, AND SPECIFICATIONS.

4. ALL PIPE LENGTHS AND DISTANCES BETWEEN STRUCTURES ARE MEASURED FROM CENTER OF STRUCTURE TO CENTER OF STRUCTURE ALONG A HORIZONTAL PLANE.

5. LOCATIONS OF EXISTING SHOWN UTILITIES ARE APPROXIMATE. IT IS THE RESPONSIBILITY OF THE CONTRACTOR TO DETERMINE THE SIZE, DEPTH, MATERIAL, AND LOCATION OF ALL EXISTING UNDERGROUND UTILITIES PRIOR TO CONSTRUCTION AND TO TAKE WHATEVER STEPS ARE NECESSARY TO PROVIDE FOR THEIR PROTECTION. THE ENGINEER HAS ATTEMPTED TO LOCATE AND INDICATE ALL EXISTING UTILITIES ON THE PLANS; HOWEVER, THIS INFORMATION IS SHOWN FOR THE CONTRACTOR'S CONVENIENCE ONLY. THE ENGINEER AND THE OWNER ASSUME NO RESPONSIBILITY FOR THE LOCATIONS OF UTILITIES SHOWN OR NOT SHOWN. AT LEAST 48 HOURS PRIOR TO DIGGING ON OR OFF SITE, THE CONTRACTOR SHALL HAVE ALL UTILITIES LOCATIONS LOCATED BY "NC ONE-CALL" 1-800-632-4949, THE CONTRACTOR SHALL CONTACT ANY UTILITY COMPANY WHOSE UTILITIES ARE NOT LOCATED BY "NC ONE CALL" FOR EXACT LOCATION OF THEIR UTILITIES PRIOR TO STARTING CONSTRUCTION. IT SHALL BE THE SOLE RESPONSIBILITY OF THE CONTRACTOR TO REPAIR AND/OR REPLACE ANY AND ALL DAMAGE MADE TO UTILITIES BY THE CONTRACTOR TO EXISTING CONDITIONS AT THE CONTRACTOR'S EXPENSE.

6. THE CONTRACTOR SHALL NOTIFY THE ENGINEER IMMEDIATELY SHOULD ANY FIELD CONDITIONS BE ENCOUNTERED THAT VARY FROM THE INFORMATION PROVIDED IN THE CONTRACT DOCUMENTS.

7. THE CONTRACTOR SHALL BE RESPONSIBLE FOR COORDINATING WITH DUKE ENERGY A MINIMUM OF 30 DAYS PRIOR TO CONSTRUCTION FOR ANY ADDITIONAL SUPPORT OR RELOCATION OF EXISTING POWER POLES AS REQUIRED FOR PIPELINE INSTALLATION. ALL COSTS OF SUCH WORK SHALL BE PAID BY THE CONTRACTOR. DUKE ENERGY DISTRIBUTION LINE REPRESENTATIVE: MR. JERRY PEARSEN (910) 602-4377.

8. ALL PAVEMENT CUTS SHALL BE SAW CUT ALONG A STRAIGHT CONTINUOUS EDGE, CUT THROUGH ENTIRE PAVEMENT SECTION. PAVEMENT OVERLAYS REQUIRE CITY OF WILMINGTON APPROVAL.

9. TRAFFIC ISLANDS, CURBS AND CONCRETE DRIVEWAYS SHALL BE REPLACED TO THE FIRST EXPANSION JOINT BEYOND THE TRENCH EXCAVATION LIMITS AND TO THE FULL WIDTH. TRAFFIC ISLANDS, CURBS AND CONCRETE DRIVEWAYS SHALL MATCH EXISTING.

10. THE CONTRACTOR SHALL REMOVE AND REINSTALL ALL EXISTING FENCE AS REQUIRED FOR PIPE INSTALLATION. ANY ADDITIONAL FENCE MATERIALS REQUIRED SHALL BE PROVIDED BY THE CONTRACTOR AT NO ADDITIONAL COST TO THE OWNER.

11. THE CONTRACTOR SHALL FURNISH AND INSTALL ALL SHEETING REQUIRED FOR THE INSTALLATION OF THE UTILITY, ALL EXCAVATIONS SHALL BE KEPT WITHIN THE DESIGNATED RIGHT OF WAY OR EASEMENT WIDTHS, EXCAVATION WITHIN PAVED AREAS SHALL BE KEPT TO A MINIMUM. SHEETING SHALL BE INSTALLED AS REQUIRED TO PROTECT EXISTING UTILITIES.

12. CONTRACTOR SHALL PLAN AND CONSTRUCT WORK SO AS TO CAUSE MINIMUM INCONVENIENCE TO THE OWNER AND PUBLIC. THE CONTRACTOR SHALL PROVIDE TRAFFIC CONTROL AND ERECT AND MAINTAIN AT ALL TIMES DURING THE DUKE OR TEMPORARY SUSPENSION OF WORK, SUITABLE BARRIERS, FENCES, SIGNS OR OTHER ADEQUATE PROTECTION, INCLUDING FLAG MEN AND WATCHMEN AS NECESSARY TO INSURE THE SAFETY OF THE PUBLIC AS WELL AS THOSE ENGAGED IN THE CONSTRUCTION WORK. CONSTRUCTION SIGNAGE SHALL BE IN ACCORDANCE WITH THE LATEST EDITION OF "CONSTRUCTION AND MAINTENANCE OPERATIONS SUPPLEMENT TO THE MANUAL ON UNIFORM TRAFFIC CONTROL DEVICES" BY THE NCDOT.

13. CLEARING REQUIREMENTS AND/OR CLEARING LIMITS ARE NOT DEPICTED ON PLANS. CLEARING THAT IS NOT SHOWN ON PLANS WILL BE NECESSARY FOR CONSTRUCTION. CONTRACTOR SHALL FIELD VERIFY REQUIRED CLEARING PRIOR TO SUBMITTING A BID AND SHALL INCLUDE COST TO PERFORM ALL CLEARING NECESSARY FOR CONSTRUCTION OF THE PROJECT IN THE COST OF THE WORK. THEREFORE NO SEPARATE PAYMENT FOR CLEARING SHALL BE MADE. ALL MATERIAL CLEARED AND GRUBBED BY THE CONTRACTOR IN ORDER TO CONSTRUCT THE WORK, SUCH AS TREES, VEGETATION, FENCING, ETC., SHALL BECOME THE PROPERTY OF THE CONTRACTOR AND SHALL BE PROPERLY DISPOSED OF OFF-SITE AT A STATE APPROVED DISPOSAL SITE. RECEIVE ENGINEER'S APPROVAL FOR ANY LANDSCAPE REMOVAL.

14. PRIOR TO CONSTRUCTION, CONTRACTOR SHALL VIDEOTAPE PROJECT SITE FEATURES AND PIPE LINE ALIGNMENT INCLUDING ALL DRIVEWAYS, SIDEWALKS, ETC., TO BE DISTURBED WITHIN THE PROJECT CONSTRUCTION AREA. ALL DISTURBED AREAS SHALL BE RESTORED TO ORIGINAL CONDITION OR BETTER. VIDEO SHALL BE SUBMITTED TO THE ENGINEER PRIOR TO THE START OF CONSTRUCTION.

15. CONTRACTOR SHALL MAINTAIN AN APPROPRIATE CONSTRUCTION ENTRANCE FOR INGRESS/EGRESS TO EACH PROPERTY AT ALL TIMES.

16. LIMITS OF CONSTRUCTION ARE SHOWN AS ALLOWED LIMITS OF DISTURBANCE AND DO NOT GRANT RIGHT OF ENTRY TO PRIVATE PROPERTY. CONTRACTOR TO SECURE RIGHT OF ENTRY FOR ALL PROPERTIES OUTSIDE OF EASEMENTS & PUBLIC RIGHT-OF-WAY WHICH WILL BE DISTURBED OR ENCROACHED UPON DURING CONSTRUCTION. WHERE THE CONTRACTOR DETERMINES THAT ENCROACHMENT ONTO PRIVATE PROPERTY IS NECESSARY, AND AN EASEMENT HAS NOT BEEN PROVIDED, THE CONTRACTOR SHALL CONTACT INDIVIDUAL PROPERTY OWNERS AND OBTAIN WRITTEN APPROVAL FOR THAT ENCROACHMENT.

17. THE CONTRACTOR SHALL PROVIDE ALL SURVEY WHERE NECESSARY FOR CONSTRUCTION. ANY EXISTING STAKE OUT OR BENCHMARKS SHALL NOT BE USED BY THE CONTRACTOR.

20. CONTRACTOR SHALL NOTIFY HOME AND BUSINESS OWNERS AT LEAST 14 DAYS PRIOR TO ANY CONSTRUCTION ACTIVITY THAT WILL TAKE PLACE IN THEIR AREA.

21. CONTRACTOR SHALL REMOVE, STORE AND REPLACE ALL CONFLICTING MAIL BOXES, CULVERTS, HEADWALL, ORNAMENTAL STRUCTURES, ETC. WITHIN THE RIGHT OF WAY. CONFLICTING TREES WITHIN THE RIGHT OF WAY SHALL BE REMOVED AS DIRECTED BY THE ENGINEER BUT NOT REPLACED.

22. EROSION AND SEDIMENTATION CONTROL DEVICES SHALL BE INSTALLED ACCORDING TO NORTH CAROLINA SEDIMENT AND EROSION CONTROL STANDARDS AND AS DIRECTED BY THE ENGINEER. ALL DEVICES SHALL BE MAINTAINED SUCH THAT THEY FUNCTION AS INTENDED. AFTER COMPLETION OF THE PROJECT THE CONTRACTOR SHALL REMOVE ALL EROSION CONTROL DEVICES WHERE A GOOD STAND OF GRASS HAS BEEN ESTABLISHED AND EROSION IS NO LONGER EVIDENT. REMOVAL OF THE REMAINDER OF THE EROSION CONTROL DEVICES SHALL OCCUR AS OTHER AREAS ARE STABILIZED. REMOVAL OF THE EROSION CONTROL DEVICES SHALL BE PERMITTED ONLY WITH THE PRIOR APPROVAL OF THE ENGINEER.

23. ALL AREAS DISTURBED BY GRADING, EXCAVATION, AND GENERAL CONSTRUCTION SHALL BE SEEDED, MULCHED, AND RESTORED IN ACCORDANCE WITH NORTH CAROLINA SEDIMENT AND EROSION CONTROL STANDARDS.

24. EXISTING VEGETATION OUTSIDE OF THE CLEARING LIMITS TO REMAIN SHALL BE PROTECTED FROM DAMAGE.

25. ALL CONSTRUCTION ACTIVITY SHALL BE LIMITED TO PUBLIC RIGHT-OF-WAY, CITY OF WILMINGTON RIGHT-OF-WAY, AND OWNER OBTAINED EASEMENTS.

26. ANY AREAS THE CONTRACTOR UTILIZES FOR STOCKPILING SHALL HAVE ADEQUATE EROSION CONTROL MEASURES INSTALLED PER THE NORTH CAROLINA SEDIMENT AND EROSION CONTROL HANDBOOK. CONTRACTOR IS RESPONSIBLE FOR SECURING WRITTEN PERMISSION FROM PROPERTY OWNER PRIOR TO STOCKPILING MATERIAL.

27. THE CONTRACTOR SHALL BE RESPONSIBLE FOR COORDINATING HIS CONSTRUCTION ACTIVITIES WITH THOSE OF OTHER CONTRACTORS AND OTHER ENTITIES INVOLVED IN ORDER TO ASSURE EFFICIENT AND ORDERLY INSTALLATION OF EACH PART OF THE WORK. COORDINATION CONFLICTS SHALL BE IMMEDIATELY DIRECTED TO THE ENGINEER.

28. THE CONTRACTOR SHALL NOT USE EXISTING SANITARY SEWERS AS A MEANS OF DEWATERING DURING CONSTRUCTION WORK. CONTRACTOR SHALL BE RESPONSIBLE FOR ALL SURFACE WATER RUNOFF AND GROUND WATER FROM THE TRENCHES AND SHALL PROVIDE NECESSARY DEWATERING AND PUMPING EQUIPMENT FOR HANDLING THESE FLOWS DURING CONSTRUCTION. DEWATERING ACTIVITIES TO COMPLY WITH ALL FEDERAL, STATE, AND LOCAL LAWS. ANY ADDITIONAL PERMITS REQUIRED AS A RESULT OF DEWATERING ACTIVITIES ARE THE CONTRACTOR'S RESPONSIBILITY. ALL DEWATERING COSTS ARE CONSIDERED ANCILLARY TO THE COST OF WORK AND NO ADDITIONAL COMPENSATION WILL BE CONSIDERED FOR DEWATERING. EROSION CONTROL MEASURES SHOWN ON PLANS ARE DESIGNED FOR RAINFALL EVENTS ONLY AS PER NCDEQ REGULATIONS. ADDITIONAL MEASURES REQUIRED TO CONTAIN/CONTROL DEWATERING ACTIVITIES AND ASSOCIATED DISCHARGES SHALL BE THE SOLE RESPONSIBILITY OF THE CONTRACTOR AND INCLUDED IN THE COST OF THE WORK.

29. ANY AND ALL DISTURBED PROPERTY PINS SHALL BE RESET BY A PROFESSIONAL SURVEYOR LICENSED IN THE STATE OF NORTH CAROLINA.

30. EXISTING WATER & SEWER SERVICES DAMAGED AS A RESULT OF CONSTRUCTION SHALL BE REPAIRED/REPLACED/RELOCATED AS REQUIRED FOR CONSTRUCTION AT NO ADDITIONAL COST TO THE OWNER.

31. EXISTING SANITARY SEWER SYSTEMS SHALL REMAIN IN SERVICE AT ALL TIMES DURING CONSTRUCTION. CONTRACTOR SHALL BE RESPONSIBLE FOR ALL WORK NECESSARY TO MAINTAIN FLOW THROUGH EXISTING SYSTEM DURING CONSTRUCTION (BYPASS PUMPING, PUMP & HAUL, PLUGS, ETC.) AT NO ADDITIONAL COST TO THE OWNER. BYPASS PUMPING PLAN MUST BE SUBMITTED PRIOR TO CONSTRUCTION AND APPROVED BEFORE LINE IS REMOVED FROM SERVICE.

32. CONTRACTOR SHALL HAVE ON SITE AT ALL TIMES REPAIR MATERIALS FOR ALL EXISTING PIPE LINES SHOWN ON THE PLANS. ALL REPAIR CLAMPS & HARDWARE MUST BE OF STAINLESS STEEL CONSTRUCTION.

33. NO PIPE JOINT SHALL EXCEED PIPE MANUFACTURER'S MAX. ALLOWABLE LIMITS FOR DEFLECTION OR CAPE FEAR PUBLIC UTILITY AUTHORITY'S MAX. ALLOWABLE DEFLECTION WHICHEVER IS LESS.

34. LIMITS OF CONSTRUCTION SHALL BE DEFINED AS WITHIN THE LIMITS OF DOT RIGHT-OF-WAY AND OWNER OBTAINED EASEMENTS DEPICTED ON THE DRAWINGS UNLESS OTHERWISE NOTED. ALL DAMAGES INCURRED AS A RESULT OF ACTIVITY OUTSIDE THE DESIGNED CONSTRUCTION LIMITS SHALL BE THE CONTRACTOR'S RESPONSIBILITY.

35. CONTRACTOR TO VERIFY SIZE, DEPTH, MATERIAL AND LOCATION FOR ALL UNDERGROUND UTILITIES PRIOR TO THE START OF CONSTRUCTION. TEST EXCAVATIONS TO DETERMINE SUCH INFORMATION SHALL BE DONE PRIOR TO CONSTRUCTION AT THE CONTRACTOR'S EXPENSE.

36. SEDIMENT & EROSION CONTROLS SHOWN ARE MINIMUM ALLOWABLE. CONTRACTOR SHALL BE RESPONSIBLE FOR INSTALLATION & MAINTENANCE OF ADDITIONAL SEDIMENT & EROSION CONTROLS AS REQUIRED TO COMPLY WITH ALL APPLICABLE FEDERAL, STATE & LOCAL LAWS.

37. BY SUBMITTING A BID THE CONTRACTOR ATTESTS THEY HAVE PERFORMED ALL SITE VERIFICATIONS AS REQUIRED TO BE CONFIDENT IN EXISTING CONDITIONS AND AS SUCH NO CLAIMS FOR ADDITIONAL PAYMENT SHALL BE CONSIDERED FOR FIELD CONDITIONS WHICH MAY DIFFER FROM WHAT IS SHOWN ON THE PLAN SHEETS.

38. SLOPES (INCLUDING CUTS, FILLS AND DITCH BANKS) THAT ARE STEEPER THAN 3 HORIZONTAL TO 1 VERTICAL LEFT EXPOSED WILL, WITHIN SEVEN (7) CALENDAR DAYS AFTER COMPLETION OF ANY PHASE OF GRADING, BE PROVIDED WITH GROUNDCOVER. SLOPES THAT ARE 3 HORIZONTAL TO 1 VERTICAL OR FLATTER WILL BE PROVIDED WITH GROUNDCOVER WITHIN FOURTEEN (14) CALENDAR DAYS.

39. TEMPORARY CONSTRUCTION EXCAVATION SHORING SHALL COMPLY WITH LOCAL, STATE, & FEDERAL GOVERNING REGULATIONS, INCLUDING OSHA (29 CFR PART 1926) EXCAVATION TRENCH SAFETY STANDARDS.

40. STOCKPILES SHALL BE SETBACK A MINIMUM HORIZONTAL DISTANCE FROM THE TOP EDGE OF THE EXCAVATION EQUAL TO THE MAXIMUM DEPTH OF THE EXCAVATION, UNLESS A SHORING SYSTEM IS DESIGN BY A PROFESSIONAL ENGINEER LICENSED IN THE STATE OF NORTH CAROLINA TO HANDLE STOCKPILE SURCHARGE LOADS.

SYMBOL LEGEND

- FIRE HYDRANT
- LIGHT POLE
- POWER POLE
- GUY WIRE
- GAS VALVE
- PROPOSED SANITARY SEWER MANHOLE
- EXISTING SANITARY SEWER MANHOLE
- SANITARY SEWER VALVE
- CO — CLEANOUT
- CURB INLET (CI) OR CATCH BASIN (CB)
- GUTTER INLET (GI)
- STORM DRAIN MANHOLE
- YARD LIGHT
- ELECTRIC HANDHOLE
- FIBER OPTIC PEDESTAL
- FO — FIBER OPTIC MARKER/FLAG
- MAILBOX
- CHECK DAM
- IRF — IRON ROD FOUND
- WATER METER
- VALVE
- SIGN
- TELEPHONE PEDESTAL
- ELECTRICAL METER BOX
- TREE LINE/LANDSCAPING
- SILT FENCE
- CONTOUR
- SD — STORM PIPE
- T — UNDERGROUND TELEPHONE LINE
- FO — UNDERGROUND FIBER OPTIC LINE
- G — UNDERGROUND GAS MAIN
- X — FENCE
- W — WATERLINE
- SEWER FORCE MAIN
- GRAVITY SEWER MAIN
- OHE — OVERHEAD ELECTRIC LINE
- RIGHT OF WAY (SEE NOTE 18)
- TH# — TEST HOLE LOCATION (TYP) REFER TO TECHNICAL SPECIFICATIONS FOR TEST HOLE DATA TEST HOLES
- BENCHMARK
- ALLOWABLE OPEN CUT TRENCH WIDTH
- BRICK PAVER REMOVAL AND OVERLAY

REV.NO.	DESCRIPTION	DATE
C	ISSUED FOR BID - NOT FOR CONSTRUCTION	2020.04
B	FINAL DESIGN - NOT FOR CONSTRUCTION	2020.03
A	PRELIMINARY DESIGN - NOT FOR CONSTRUCTION	2019.12

REVISIONS

NORTH CAROLINA PROFESSIONAL SEAL 025512 ENGINEER ANTHONY W. BOAHN 4-7-20

McKIM&CREED
Venture IV Building, Suite 500
1730 Varsity Drive
Raleigh, North Carolina 27606
Phone: (919) 233-8091, Fax: (919) 233-8031
NC License# F-1222
www.mckimcreed.com

COUNTY OF PENDER

PENDER COUNTY

ROCKY POINT/TOPSAIL WATER AND SEWER DISTRICT

HAMPSTEAD / SCOTT'S HILL WELL PROJECT

GENERAL

GENERAL NOTES

PROJ. START DATE:	2019.12
MCE PROJ. #	00542-0079
DRAWN	MTN
DESIGNED	STM
CHECKED	AWB
PROJ. MGR.	AWB

SCALE
HORIZONTAL: N/A
VERTICAL: N/A

G02.0
DRAWING NUMBER
C
REVISION

STATUS: ISSUED FOR BID NOT FOR CONSTRUCTION

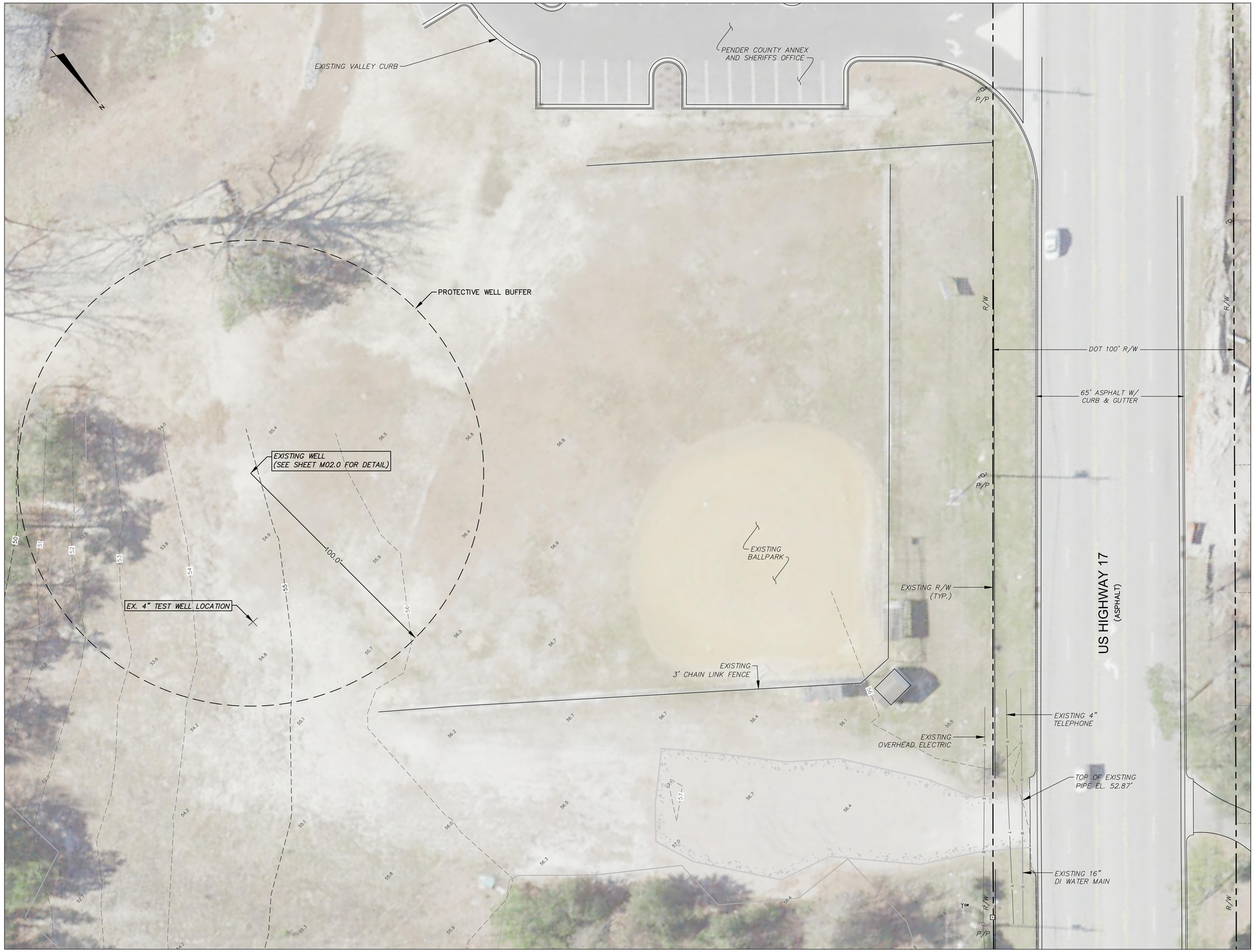

CONSTRUCTION SEQUENCE:

1. THE INTENT OF THE CONSTRUCTION SEQUENCE IS TO PROVIDE THE CONTRACTOR WITH A GENERAL GUIDE FOR CONSTRUCTION PURPOSES. THIS SEQUENCE IS NOT INTENDED TO OUTLINE ALL CONSTRUCTION ACTIVITIES ON THIS PROJECT.
2. ALL EROSION CONTROL MEASURES SHALL BE CONSTRUCTED IN ACCORDANCE WITH THE NCDENR EROSION AND SEDIMENTATION CONTROL MANUAL.
3. ALL EROSION CONTROL MEASURES SHALL BE INSPECTED WEEKLY AND AFTER RAINFALL EVENTS. NEEDED REPAIRS SHALL BE MADE IMMEDIATELY.
4. IF IT IS DETERMINED DURING CONSTRUCTION THAT SIGNIFICANT SEDIMENT IS LEAVING THE SITE, DESPITE PROPER IMPLEMENTATION AND MAINTENANCE, THE CONTRACTOR IS OBLIGATED TO TAKE ADDITIONAL CORRECTIVE ACTION. CONTACT OWNER'S REPRESENTATIVE AND ENGINEER WITH ANY ADDITIONAL MEASURES NEEDED.
5. CONTRACTOR SHALL ESTABLISH GROUNDCOVER ON DISTURBED AREAS AFTER COMPLETION OF GRADING PER THE SCHEDULE BELOW:

   SLOPES FLATTER THAN 3:1: (14) CALENDAR DAYS
   SLOPES 3:1 AND STEEPER: (7) CALENDAR DAYS

6. CONTRACTOR SHALL ARRANGE PRE-CONSTRUCTION MEETING WITH THE OWNER'S REPRESENTATIVE, ENGINEER AND NCDENR. CONTACT NCDENR AT 252-946-6481.
7. OBTAIN LETTER OF PLAN APPROVAL FOR SEDIMENTATION AND EROSION CONTROL FROM NCDENR.
8. CONTRACTOR TO POST EROSION CONTROL PERMIT PROMINENTLY ON SITE AT ALL TIMES.
9. CONTRACTOR TO VERIFY LOCATION AND DEPTH OF EXISTING UTILITIES TO AVOID CONFLICT DURING INSTALLATION OF EROSION CONTROL MEASURES AND STORM DRAINAGE. CONTRACTOR IS TO CALL 800-632-4949 FOR "NC ONE CALL" TO HAVE UTILITIES LOCATED.
10. CONTRACTOR TO HAVE A PROFESSIONAL LAND SURVEYOR FLAG PROPERTY LINES, EASEMENTS, LANDSCAPE BUFFERS, STREAM BUFFERS, TREE PROTECTION AREAS AND LIMITS OF DISTURBANCE.
11. INSTALL SILT FENCING AS SHOWN AND DETAILED ON PLAN. CLEAR ONLY AS NECESSARY TO INSTALL THESE DEVICES. INSTALL SILT FENCE OUTLETS AS SHOWN ON PLAN.
12. BEGIN SITE GRADING OPERATIONS. ANY UNSUITABLE SOIL MATERIAL FOUND, AS DETERMINED BY THE GEOTECHNICAL ENGINEER, SHALL BE STOCKPILED IN THE LOCATION APPROVED BY THE OWNER.
13. PERFORM SEEDING AND MULCHING AS REQUIRED IN ACCORDANCE WITH REQUIREMENTS SHOWN ON THESE PLANS.
14. AFTER SITE IS COMPLETELY STABILIZED, REMOVE ALL TEMPORARY MEASURES, INSTALL PERMANENT VEGETATION AS REQUIRED AND ON ANY RESULTING BARE AREAS. PROVIDE POSITIVE DRAINAGE SO NO PONDING OF RUNOFF OCCURS.

LIMITS OF DISTURBANCE NOTES:

1. ALL SILT FENCING OR TREE PROTECTION FENCING SHALL BE INSTALLED INSIDE LIMITS OF DISTURBANCE.

EROSION CONTROL AND GRADING NOTES:

1. NO CONCRETE OR CEMENT SLURRY SHALL BE DISCHARGED FROM THE SITE. ANY HARDENED CONCRETE RESIDUE WILL BE DISPOSED OF, OR RECYCLED ON SITE, IN ACCORDANCE WITH LOCAL AND STATE SOLID WASTE REGULATIONS.
2. ALL SWALES, DITCHES, PERIMETER SLOPES AND ALL SLOPES STEEPER THAN 3 HORIZONTAL TO 1 VERTICAL (3:1) SHALL BE PROVIDED TEMPORARY OR PERMANENT STABILIZATION WITH GROUND COVER AS SOON AS PRACTICABLE BUT IN ANY EVENT WITHIN 7 CALENDAR DAYS FROM THE LAST LAND-DISTURBING ACTIVITY. ALL OTHER DISTURBED AREAS SHALL BE PROVIDED TEMPORARY OR PERMANENT STABILIZATION WITH GROUND COVER AS SOON AS PRACTICABLE BUT IN ANY EVENT WITHIN 14 CALENDAR DAYS FROM THE LAST LAND-DISTRUBING ACTIVITY.
3. TEMPORARY SEDIMENT CONTROL MEASURES (SILT FENCE, INLET PROTECTION, CONSTRUCTION ENTRANCE, ETC.) SHALL BE MAINTAINED UNTIL ALL CONTRIBUTING AREAS ARE GRADED AND STABILIZED.
4. DUST CONTROL ON SITE SHALL BE MINIMIZED BY SPRAYING WATER ON DRY AREAS OF THE SITE. THE USE OF OILS AND OTHER PETROLEUM BASED OR TOXIC LIQUIDS FOR DUST SUPPRESSION IS STRICTLY PROHIBITED.
5. TEMPORARY MATTING SHALL BE INSTALLED ON ALL SLOPES 3:1 AND STEEPER.
6. SOIL UNDER BUILDINGS, PAVED AREAS AND WITHIN SLOPES GREATER THAN 3:1 (H:V) SHALL BE APPROVED, PLACED AND COMPACTED AS RECOMMENDED BY THE GEOTECHNICAL ENGINEER.
7. ALL GRADED AREAS SHALL BE SLOPED SUCH THAT NO AREAS OF STANDING WATER OCCUR AND ALL AREAS POSITIVELY DRAIN TO DRAINAGE STRUCTURES, SWALES OR STORMWATER MANAGEMENT FACILITIES.

20' 0 20' 40'
SCALE: 1"=20' (Horiz.)

REV.NO.	DESCRIPTION	DATE
C	ISSUED FOR BID - NOT FOR CONSTRUCTION	2020.04
B	FINAL DESIGN - NOT FOR CONSTRUCTION	2020.03
A	PRELIMINARY DESIGN - NOT FOR CONSTRUCTION	2019.12

REVISIONS

NORTH CAROLINA PROFESSIONAL SEAL 025512 ENGINEER ANTHONY W. BOAHN 4-1-20

McKIM&CREED
Venture IV Building, Suite 500
1730 Varsity Drive
Raleigh, North Carolina 27606
Phone: (919) 233-8091, Fax: (919) 233-8031
NC License# F-1222
www.mckimcreed.com

COUNTY OF PENDER

PENDER COUNTY

ROCKY POINT/TOPSAIL WATER AND SEWER DISTRICT

HAMPSTEAD / SCOTT'S HILL WELL PROJECT

CIVIL SITE

ANNEX - WELL NO.6 - EXISTING CONDITIONS

PROJ. START DATE:	2019.12
MCE PROJ. #	00542-0079
DRAWN	MTN
DESIGNED	STM
CHECKED	SJK
PROJ. MGR.	SJK

SCALE
HORIZONTAL: 1" = 20'
VERTICAL: N/A

C01.0
DRAWING NUMBER
C
REVISION

STATUS: ISSUED FOR BID NOT FOR CONSTRUCTION

I:\00542\0079\WATER\80-DRAWINGS\CIVIL\C01.0-005420079.DWG 04/21/2020 08:19:58 MORGAN NORVILLE

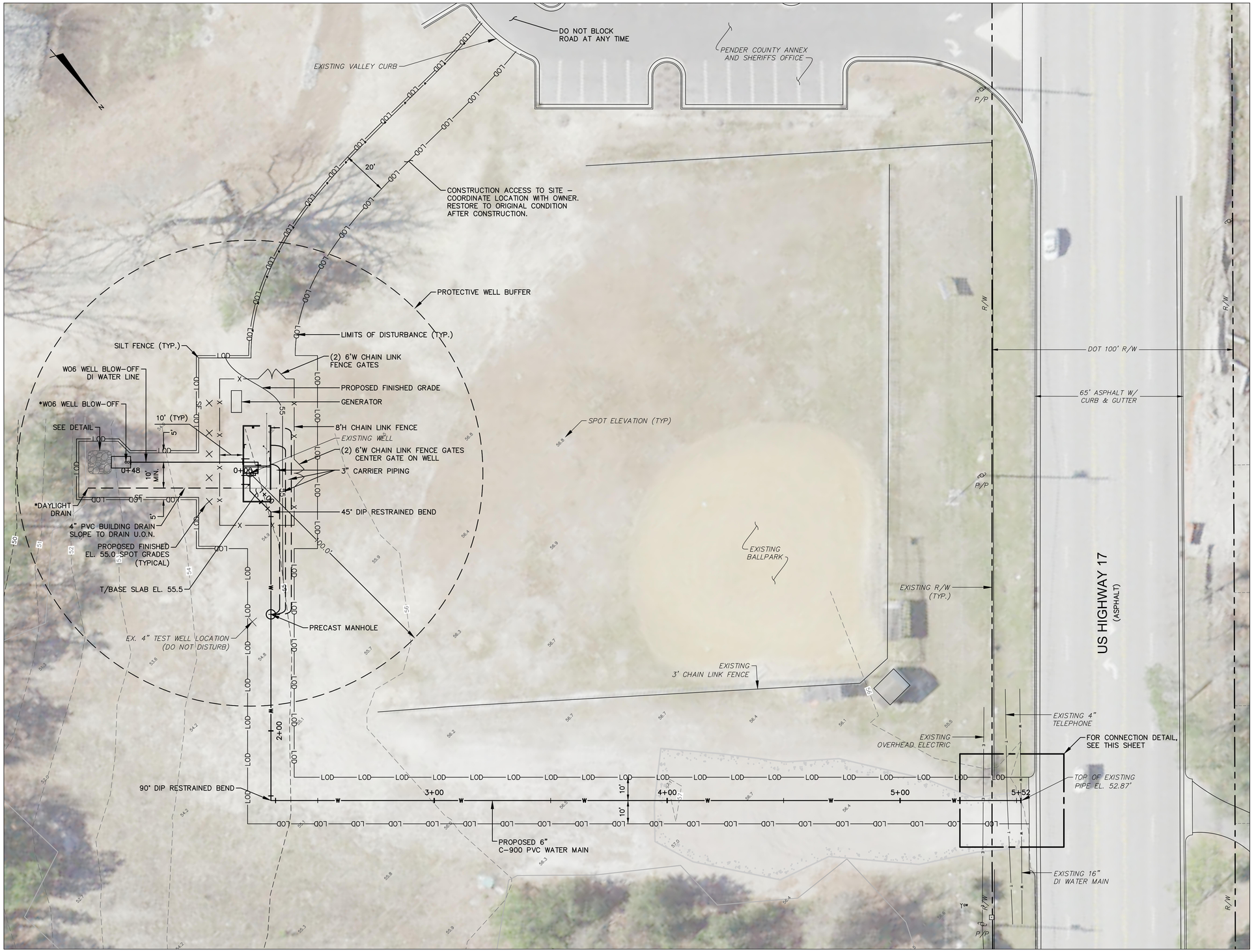

NOTES:

1. SEE BUILDING PLAN ON SHEET M01.0 FOR TRANSITION LOCATION BETWEEN 6" PVC (C900) AND DUCTILE IRON PIPE
2. DRAIN PIPING UNDER BUILDING PAD SHALL BE CAST IRON (HUB AND SPIGOT). TRANSITION TO SCH. 80 PVC OUTSIDE PAD USING FERNCO COUPLING.
3. * = ADJUST LOCATION TO AVOID TREES – COORDINATE WITH OWNER.
4. GRADE SITE FOR POSITIVE DRAINAGE AWAY FROM WELL HOUSE.

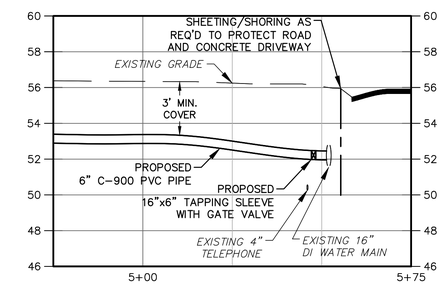

WATER MAIN CONNECTION

HOR: 1" = 20'
VER: 1" = 4'

20' 0 20' 40'
SCALE: 1"=20' (Horiz.)

REV.NO.	DESCRIPTION	DATE
C	ISSUED FOR BID - NOT FOR CONSTRUCTION	2020.04
B	FINAL DESIGN - NOT FOR CONSTRUCTION	2020.03
A	PRELIMINARY DESIGN - NOT FOR CONSTRUCTION	2019.12

REVISIONS

NORTH CAROLINA PROFESSIONAL SEAL 025512 ENGINEER ANTHONY W. BOAHN 4-1-20

McKIM&CREED
Venture IV Building, Suite 500
1730 Varsity Drive
Raleigh, North Carolina 27606
Phone: (919) 233-8091, Fax: (919) 233-8031
NC License# F-1222
www.mckimcreed.com

COUNTY OF PENDER

PENDER COUNTY

ROCKY POINT/TOPSAIL WATER AND SEWER DISTRICT

HAMPSTEAD / SCOTT'S HILL WELL PROJECT

CIVIL SITE

ANNEX - WELL NO.6 - PROPOSED WELL SITE

PROJ. START DATE:	2019.12
MCE PROJ. #	00542-0079
DRAWN	MTN
DESIGNED	STM
CHECKED	SJK
PROJ. MGR.	SJK

SCALE
HORIZONTAL: 1" = 20'
VERTICAL: N/A

C02.0
DRAWING NUMBER
C
REVISION

STATUS: ISSUED FOR BID NOT FOR CONSTRUCTION

I:\00542\0079\WATER\80-DRAWINGS\CIVIL\C02.0-005420079.DWG 04/21/2020 08:20:32 MORGAN NORVILLE

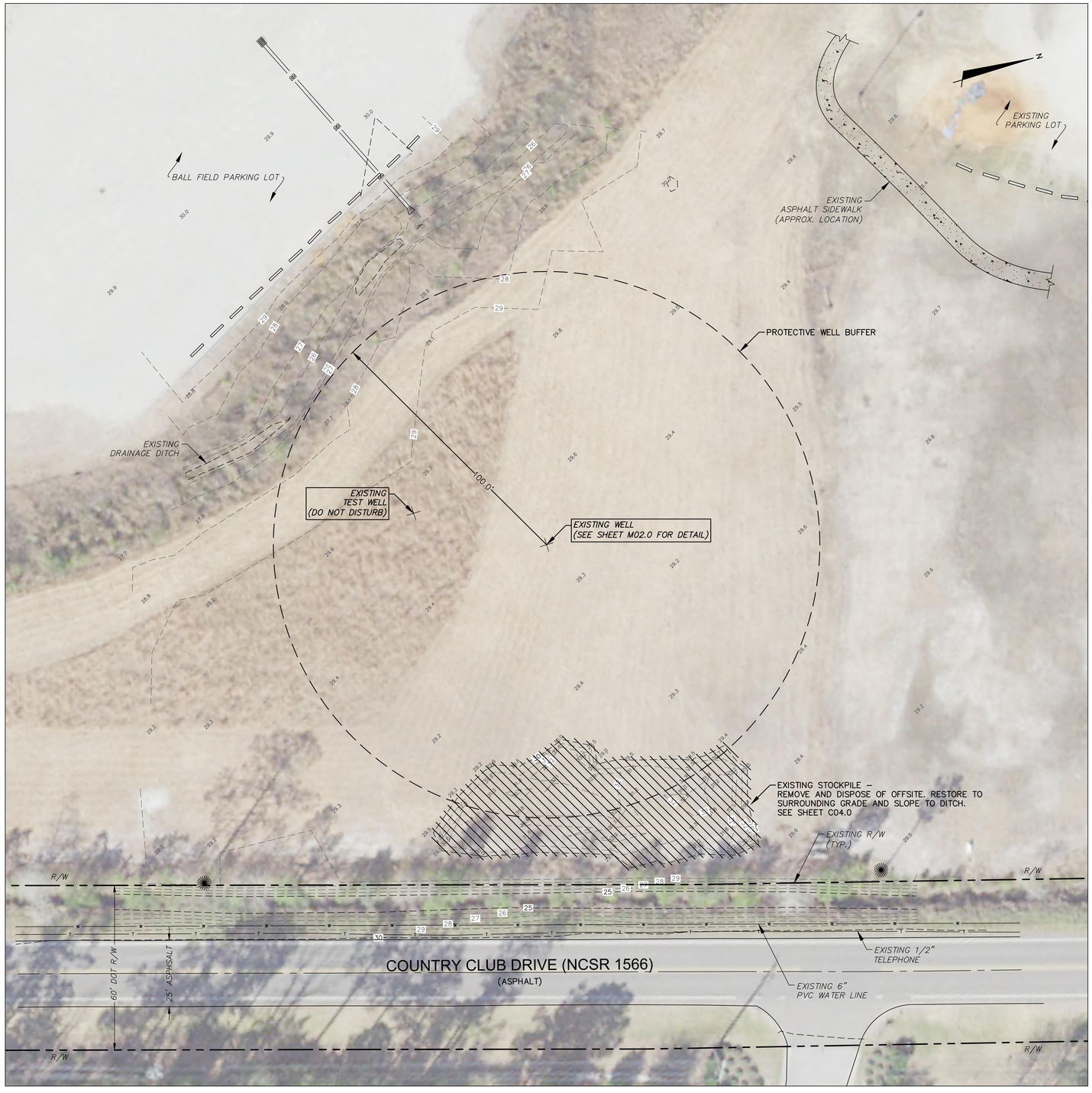

20' 0 20' 40'
SCALE: 1"=20' (Horiz.)

CONSTRUCTION SEQUENCE:

1. THE INTENT OF THE CONSTRUCTION SEQUENCE IS TO PROVIDE THE CONTRACTOR WITH A GENERAL GUIDE FOR CONSTRUCTION PURPOSES. THIS SEQUENCE IS NOT INTENDED TO OUTLINE ALL CONSTRUCTION ACTIVITIES ON THIS PROJECT.
2. ALL EROSION CONTROL MEASURES SHALL BE CONSTRUCTED IN ACCORDANCE WITH THE NCDENR EROSION AND SEDIMENTATION CONTROL MANUAL.
3. ALL EROSION CONTROL MEASURES SHALL BE INSPECTED WEEKLY AND AFTER RAINFALL EVENTS. NEEDED REPAIRS SHALL BE MADE IMMEDIATELY.
4. IF IT IS DETERMINED DURING CONSTRUCTION THAT SIGNIFICANT SEDIMENT IS LEAVING THE SITE, DESPITE PROPER IMPLEMENTATION AND MAINTENANCE, THE CONTRACTOR IS OBLIGATED TO TAKE ADDITIONAL CORRECTIVE ACTION. CONTACT OWNER'S REPRESENTATIVE AND ENGINEER WITH ANY ADDITIONAL MEASURES NEEDED.
5. CONTRACTOR SHALL ESTABLISH GROUNDCOVER ON DISTURBED AREAS AFTER COMPLETION OF GRADING PER THE SCHEDULE BELOW:

   SLOPES FLATTER THAN 3:1: (14) CALENDAR DAYS
   SLOPES 3:1 AND STEEPER: (7) CALENDAR DAYS
6. CONTRACTOR TO VERIFY LOCATION AND DEPTH OF EXISTING UTILITIES TO AVOID CONFLICT DURING INSTALLATION OF EROSION CONTROL MEASURES AND STORM DRAINAGE. CONTRACTOR IS TO CALL 800-632-4949 FOR "NC ONE CALL" TO HAVE UTILITIES LOCATED.
7. INSTALL SILT FENCING AS SHOWN AND DETAILED ON PLAN. CLEAR ONLY AS NECESSARY TO INSTALL THESE DEVICES. INSTALL SILT FENCE OUTLETS AS SHOWN ON PLAN.
8. PERFORM SEEDING AND MULCHING AS REQUIRED IN ACCORDANCE WITH REQUIREMENTS SHOWN ON THESE PLANS.
9. AFTER SITE IS COMPLETELY STABILIZED, REMOVE ALL TEMPORARY MEASURES, INSTALL PERMANENT VEGETATION AS REQUIRED AND ON ANY RESULTING BARE AREAS. PROVIDE POSITIVE DRAINAGE SO NO PONDING OF RUNOFF OCCURS.

LIMITS OF DISTURBANCE NOTES:

1. ALL SILT FENCING SHALL BE INSTALLED INSIDE LIMITS OF DISTURBANCE.

EROSION CONTROL AND GRADING NOTES:

1. NO CONCRETE OR CEMENT SLURRY SHALL BE DISCHARGED FROM THE SITE. ANY HARDENED CONCRETE RESIDUE WILL BE DISPOSED OF, OR RECYCLED ON SITE, IN ACCORDANCE WITH LOCAL AND STATE SOLID WASTE REGULATIONS.
2. ALL SWALES, DITCHES, PERIMETER SLOPES AND ALL SLOPES STEEPER THAN 3 HORIZONTAL TO 1 VERTICAL (3:1) SHALL BE PROVIDED TEMPORARY OR PERMANENT STABILIZATION WITH GROUND COVER AS SOON AS PRACTICABLE BUT IN ANY EVENT WITHIN 7 CALENDAR DAYS FROM THE LAST LAND-DISTURBING ACTIVITY. ALL OTHER DISTURBED AREAS SHALL BE PROVIDED TEMPORARY OR PERMANENT STABILIZATION WITH GROUND COVER AS SOON AS PRACTICABLE BUT IN ANY EVENT WITHIN 14 CALENDAR DAYS FROM THE LAST LAND-DISTRUBING ACTIVITY.
3. TEMPORARY SEDIMENT CONTROL MEASURES (SILT FENCE, INLET PROTECTION, CONSTRUCTION ENTRANCE, ETC.) SHALL BE MAINTAINED UNTIL ALL CONTRIBUTING AREAS ARE GRADED AND STABILIZED.
4. DUST CONTROL ON SITE SHALL BE MINIMIZED BY SPRAYING WATER ON DRY AREAS OF THE SITE. THE USE OF OILS AND OTHER PETROLEUM BASED OR TOXIC LIQUIDS FOR DUST SUPPRESSION IS STRICTLY PROHIBITED.
5. TEMPORARY MATTING SHALL BE INSTALLED ON ALL SLOPES 3:1 AND STEEPER.
6. SOIL UNDER BUILDINGS, PAVED AREAS AND WITHIN SLOPES GREATER THAN 3:1 (H:V) SHALL BE APPROVED, PLACED AND COMPACTED AS RECOMMENDED BY THE GEOTECHNICAL ENGINEER.
7. ALL GRADED AREAS SHALL BE SLOPED SUCH THAT NO AREAS OF STANDING WATER OCCUR AND ALL AREAS POSITIVELY DRAIN TO DRAINAGE STRUCTURES, SWALES OR STORMWATER MANAGEMENT FACILITIES.

REV. NO.	DESCRIPTION	DATE
C	ISSUED FOR BID - NOT FOR CONSTRUCTION	2020.04
B	FINAL DESIGN - NOT FOR CONSTRUCTION	2020.03
A	PRELIMINARY DESIGN - NOT FOR CONSTRUCTION	2019.12

REVISIONS

NORTH CAROLINA PROFESSIONAL SEAL 025512 ENGINEER ANTHONY W. BOJANN
4-7-20

McKIM&CREED
Venture IV Building, Suite 500
1730 Varsity Drive
Raleigh, North Carolina 27606
Phone: (919) 233-8091, Fax: (919) 233-8031
NC License# F-1222
www.mckimcreed.com

COUNTY OF PENDER

PENDER COUNTY

ROCKY POINT/TOPSAIL WATER AND SEWER DISTRICT

HAMPSTEAD / SCOTT'S HILL WELL PROJECT

CIVIL SITE

KIWANIS - WELL NO.4 - EXISTING CONDITIONS

PROJ. START DATE:	2019.12
MCE PROJ. #	00542-0079
DRAWN	MTN
DESIGNED	STM
CHECKED	SJK
PROJ. MGR.	SJK

SCALE
HORIZONTAL: 1" = 20'
VERTICAL: N/A

C03.0
DRAWING NUMBER
C
REVISION

STATUS: ISSUED FOR BID NOT FOR CONSTRUCTION

I:\00542\0079\WATER\80-DRAWINGS\CIVIL\C03.0-005420079.DWG 04/21/2020 08:20:53 MORGAN NORVILLE

NOTES:

1. SEE BUILDING PLAN ON SHEET M01.0 FOR TRANSITION LOCATION BETWEEN 6" PVC (C900) AND DUCTILE IRON PIPE.
2. DRAIN PIPING UNDER BUILDING PAD SHALL BE CAST IRON (HUB AND SPIGOT). TRANSITION TO SCH. 80 PVC OUTSIDE PAD USING FERNCO COUPLING.
3. GRADE SITE FOR POSITIVE DRAINAGE AWAY FROM WELL HOUSE.

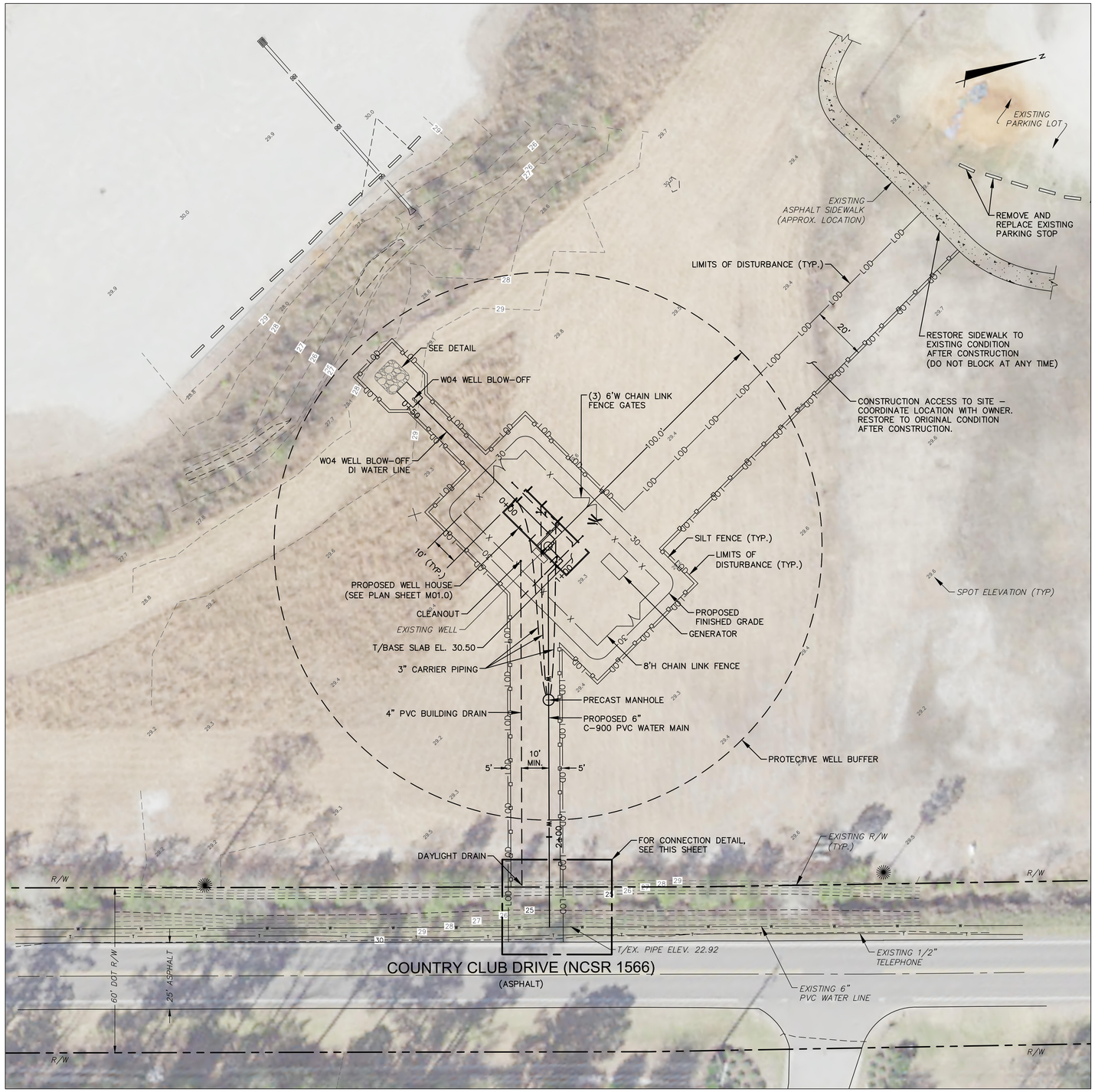

20' 0 20' 40'
SCALE: 1"=20' (Horiz.)

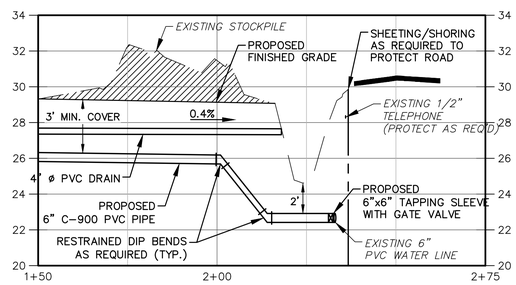

WATER MAIN CONNECTION

HOR: 1" = 20'
VER: 1" = 4'

REV. NO.	DESCRIPTION	DATE
C	ISSUED FOR BID - NOT FOR CONSTRUCTION	2020.04
B	FINAL DESIGN - NOT FOR CONSTRUCTION	2020.03
A	PRELIMINARY DESIGN - NOT FOR CONSTRUCTION	2019.12

REVISIONS

NORTH CAROLINA PROFESSIONAL SEAL 025512 ENGINEER ANTHONY W. BOJAIN 4-1-20

McKIM&CREED
Venture IV Building, Suite 500
1730 Varsity Drive
Raleigh, North Carolina 27606
Phone: (919) 233-8091, Fax: (919) 233-8031
NC License# F-1222
www.mckimcreed.com

COUNTY OF PENDER

PENDER COUNTY

ROCKY POINT/TOPSAIL WATER AND SEWER DISTRICT

HAMPSTEAD / SCOTT'S HILL WELL PROJECT

CIVIL SITE

KIWANIS - WELL NO.4 - PROPOSED WELL SITE

PROJ. START DATE:	2019.12
MCE PROJ. #	00542-0079
DRAWN	MTN
DESIGNED	STM
CHECKED	SJK
PROJ. MGR.	SJK

SCALE
HORIZONTAL: 1" = 20'
VERTICAL: N/A

C04.0
DRAWING NUMBER
C
REVISION

STATUS: ISSUED FOR BID NOT FOR CONSTRUCTION

I:\00542\0079\WATER\80-DRAWINGS\CIVIL\C04.0-005420079.DWG 04/21/2020 08:21:18 MORGAN NORVILLE

NOTES:
1. ALL EXPOSED PIPING SHALL BE FLANGED DIP U.O.N.
2. 250 GALLON CHEMICAL TANK – SNYDER INDUSTRIES INC. ASM TK 250VNT x 36 PART# 5730100N, OR EQUAL.
3. CHEMICAL CONTAINMENT – ULTRATECH ULTRA SPILL PALLET PART# 1057, OR EQUAL.
4. PROVIDE REMOVABLE IN-LINE Y STRAINER MEETING ANALYZER REQUIREMENTS (ISOLATE STRAINER WITH BALL VALVE).
5. ALL PVC PIPE SCH 80 U.O.N.
6. BALL VALVE GASKETS SHALL BE SUITABLE FOR INTENDED CHEMICAL USE.
7. SUPPORT ALL PVC PIPING OFF WALLS (SEE DETAILS).
8. KIWANIS WELL NO. 4 FLOOR PLAN SIMILAR TO ANNEX WELL (SHOWN)
9. PROVIDE AND INSTALL NFPA-704 COMPLIANT SIGNS FOR EACH CHEMICAL IN 3 LOCATIONS (FENCE, BUILDING EXTERIOR, TANKS) AT EACH LOCATION. OWNER WILL DETERMINE LOCATIONS FOR TEMPORARY WELL INSTALLATIONS.
10. PROVIDE AND INSTALL PIPE IDENTIFICATION DEVICES ON ALL PIPE IN ACCORDANCE WITH SPEC. 02 08 00.
11. FE = FIRE EXTINGUISHER. WILLIAMS BROS., MODEL: APEX WB-SR95246-FG OR EQUAL W/ WALL BRACKETS (ABC 1016 DRY CHEM TYPE) MOUNT PER AHJ REQUIREMENTS.
12. STATIC MIXER IS WESTGATE MODEL 2800 .7 BETA OR EQUAL.

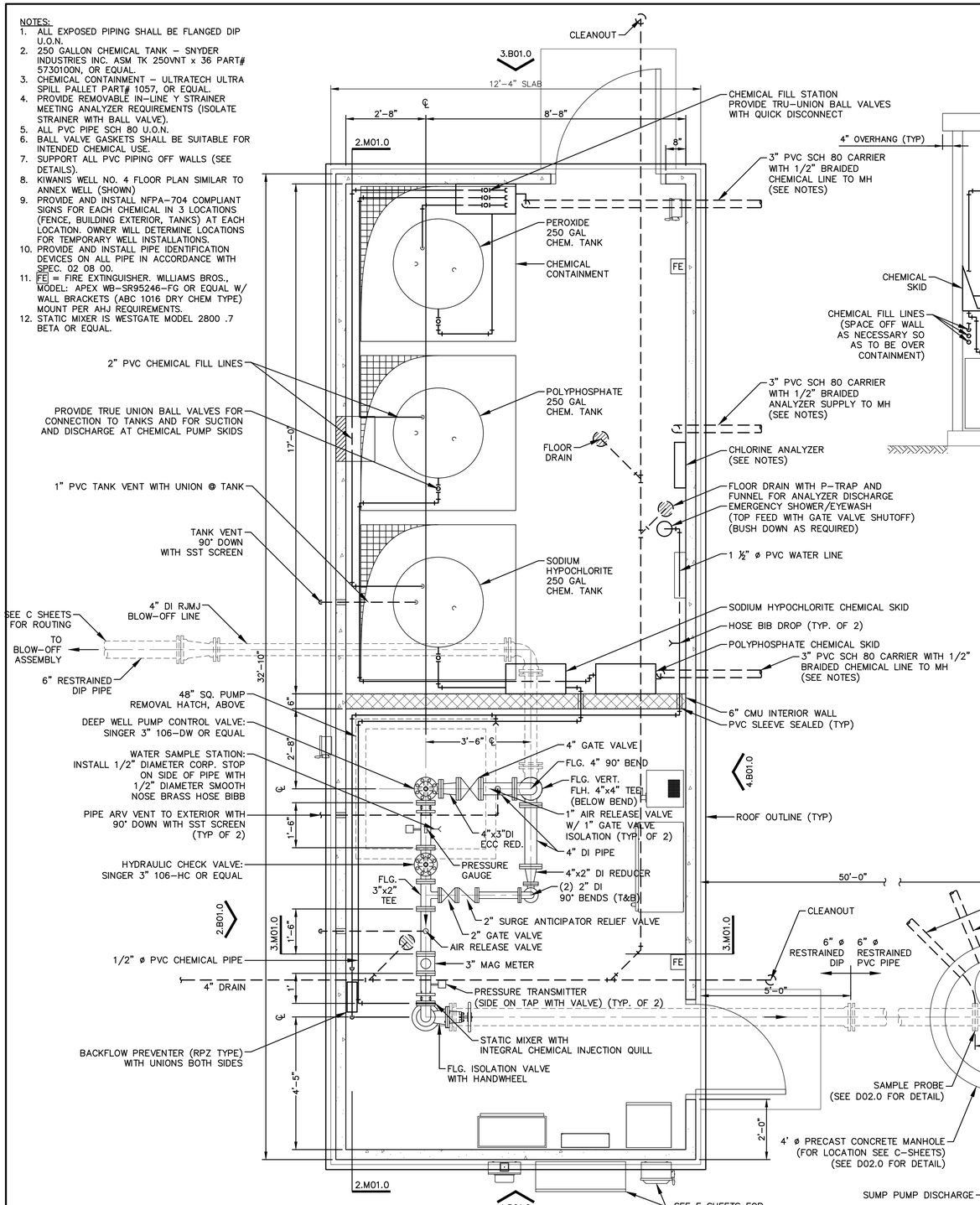

1 - ANNEX WELL NO. 6 FLOOR PLAN
(KIWANIS WELL NO. 4 – SIMILAR) 1/2"=1'-0"

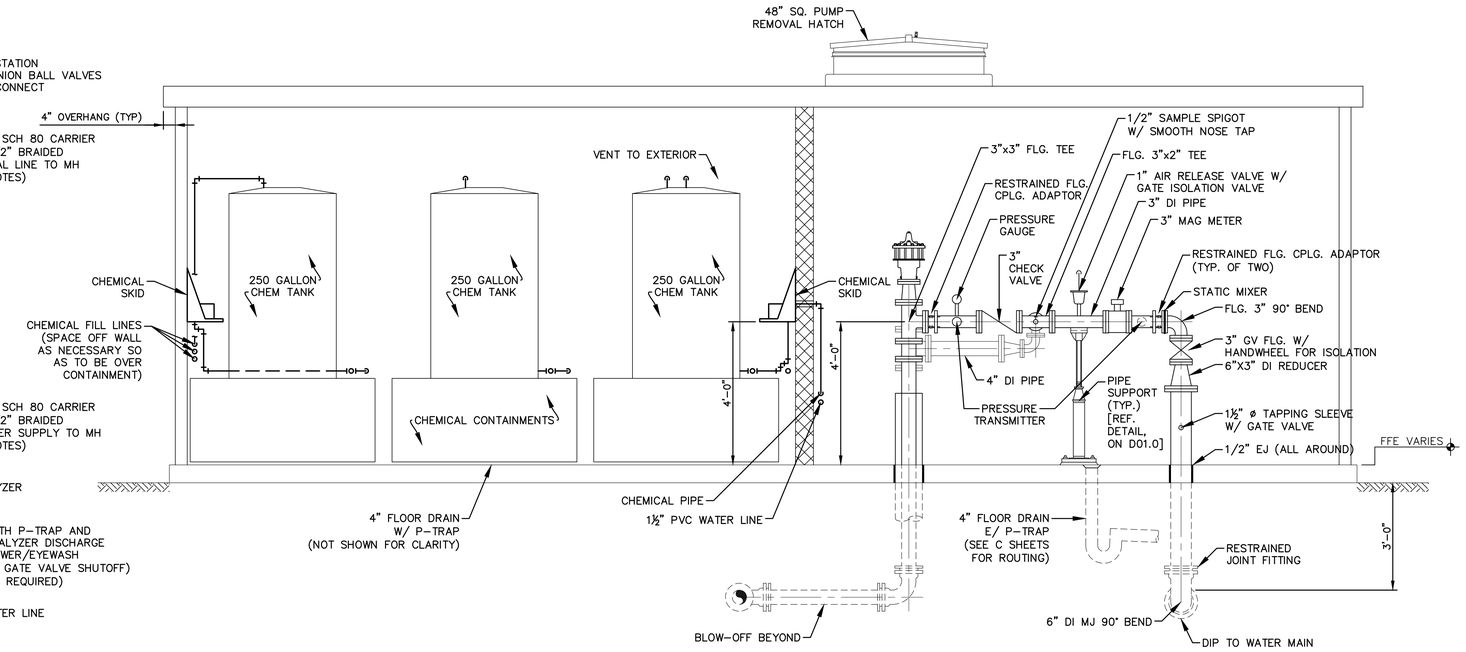

2 - SECTION
1/2"=1'-0"

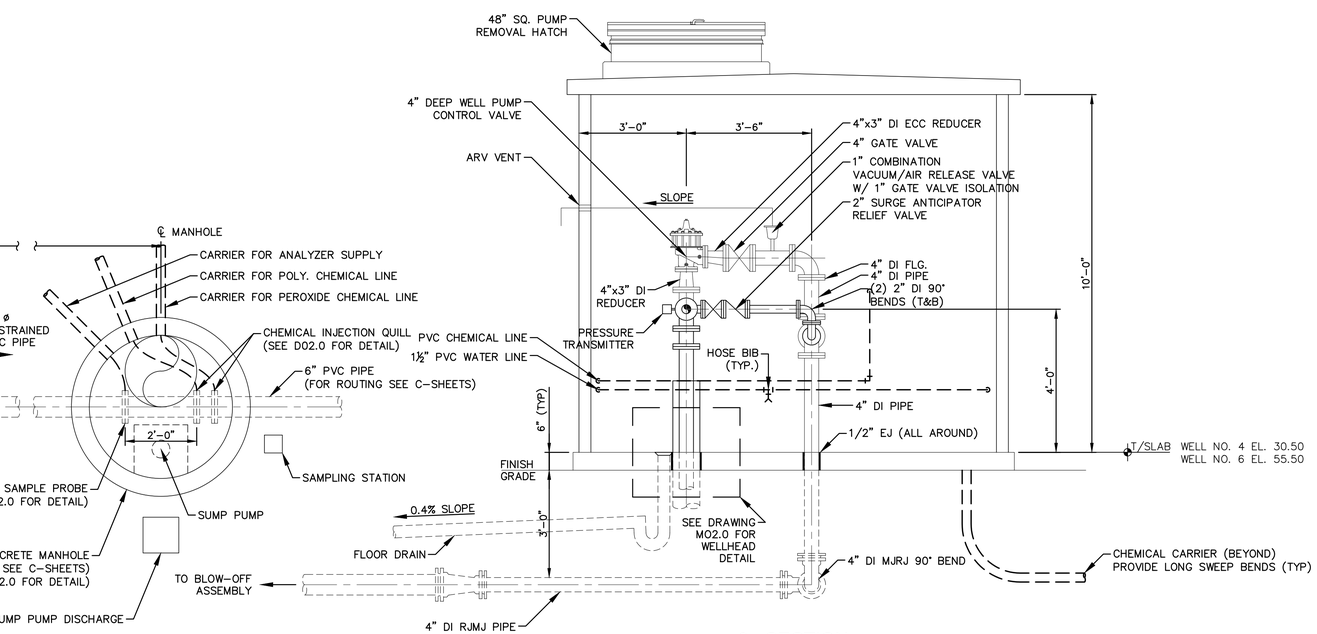

3 - SECTION
1/2"=1'-0"

REV NO.	DESCRIPTION	DATE
C	ISSUED FOR BID - NOT FOR CONSTRUCTION	2020.04
B	FINAL DESIGN - NOT FOR CONSTRUCTION	2020.03
A	PRELIMINARY DESIGN - NOT FOR CONSTRUCTION	2019.12

REVISIONS

NORTH CAROLINA PROFESSIONAL SEAL 025512 ENGINEER ANTHONY W. BOAHN 4-1-20

McKIM&CREED
Venture IV Building, Suite 500
1730 Varsity Drive
Raleigh, North Carolina 27606
Phone: (919) 233-8091, Fax: (919) 233-8031
NC License# F-1222
www.mckimcreed.com

COUNTY OF PENDER

PENDER COUNTY

ROCKY POINT/TOPSAIL WATER AND SEWER DISTRICT

HAMPSTEAD / SCOTT'S HILL WELL PROJECT

MECHANICAL

WELL HOUSE PLAN AND SECTIONS

PROJ. START DATE:	2019.12
MCE PROJ. #	00542-0079
DRAWN	MTN
DESIGNED	STM
CHECKED	SJK
PROJ. MGR.	SJK

SCALE
HORIZONTAL: AS NOTED
VERTICAL: AS NOTED

M01.0
DRAWING NUMBER
C
REVISION

STATUS: ISSUED FOR BID
NOT FOR CONSTRUCTION

I:\00542\0079\WATER\80-DRAWINGS\MECHANICAL\M01.0-005420079.DWG 04/21/2020 08:26:14 MORGAN NORVILLE

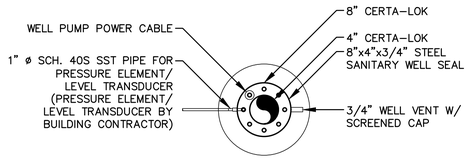

PLAN

(ALL PROVIDED BY WELL DRILLER UNLESS OTHERWISE NOTED)
N.T.S.

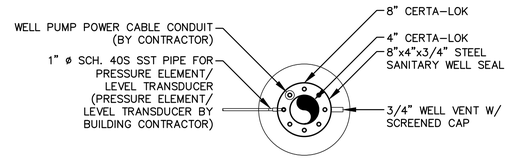

WELL HEAD DETAIL - PLAN

N.T.S.

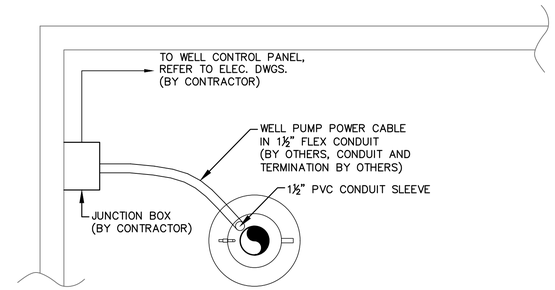

WELL HEAD - ELECTRICAL PLAN (BY CONTRACTOR)

N.T.S.

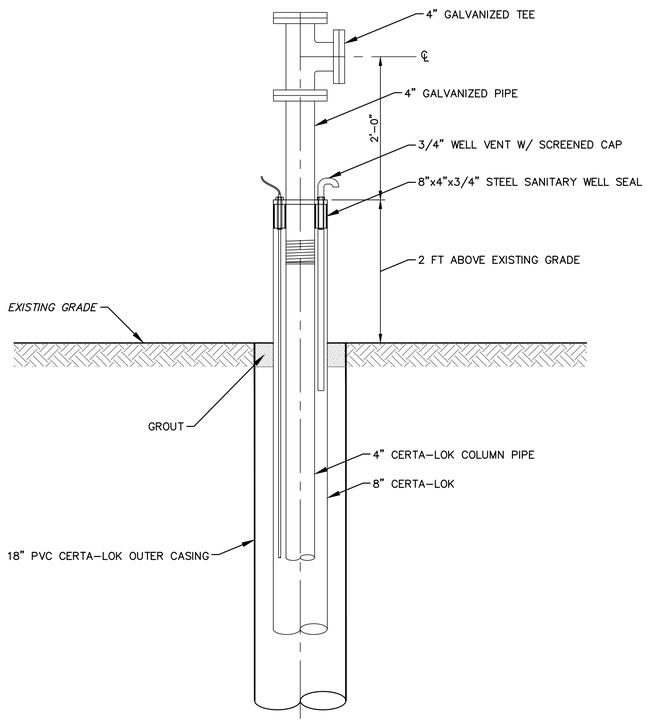

EXISTING WELL DETAIL - SECTION

(ALL PROVIDED BY WELL DRILLER UNLESS OTHERWISE NOTED)
N.T.S.

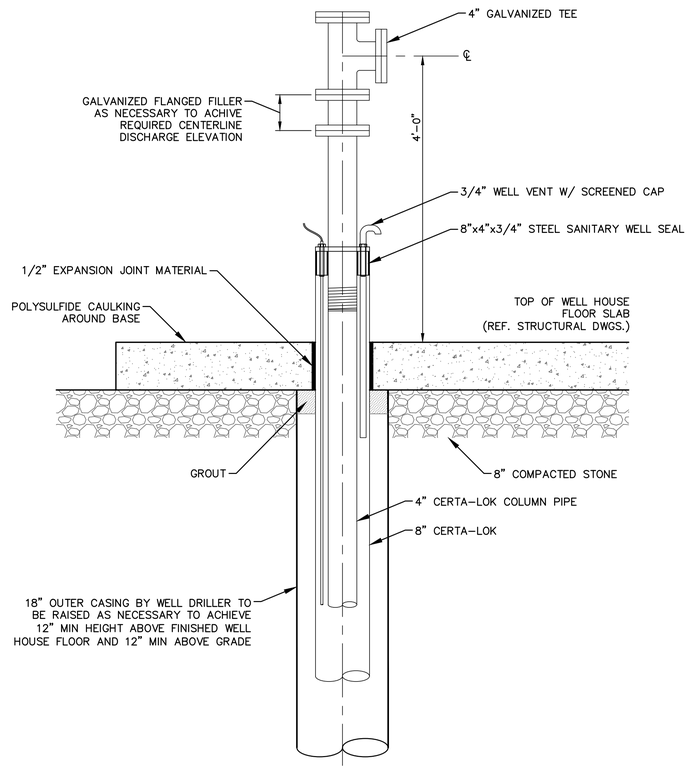

WELL HEAD DETAIL - SECTION (BY OTHERS U.O.N.)

N.T.S.

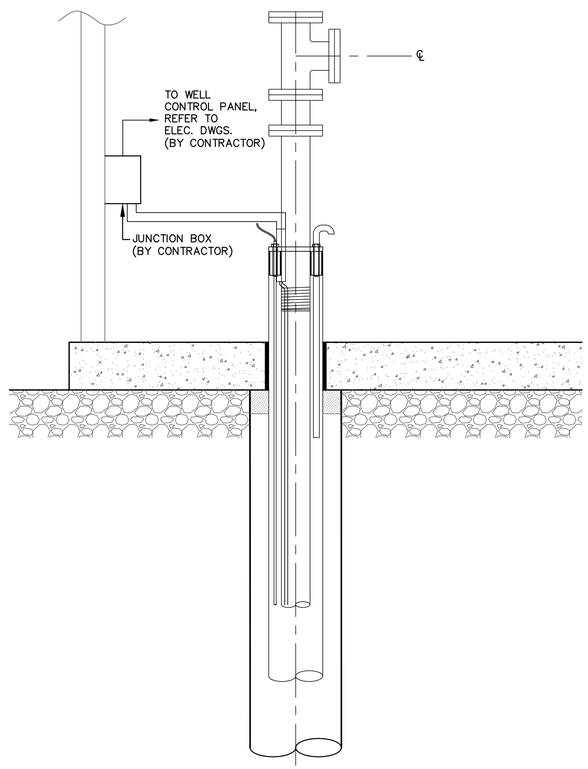

WELL HEAD - ELECTRICAL SECTION (BY OTHERS U.O.N.)

N.T.S.

REV.NO.	DESCRIPTION	DATE
C	ISSUED FOR BID - NOT FOR CONSTRUCTION	2020.04
B	FINAL DESIGN - NOT FOR CONSTRUCTION	2020.03
A	PRELIMINARY DESIGN - NOT FOR CONSTRUCTION	2019.12

REVISIONS

NORTH CAROLINA PROFESSIONAL SEAL 025512 ENGINEER ANTHONY W. BOAHN 4-7-20

McKIM&CREED
Venture IV Building, Suite 500
1730 Varsity Drive
Raleigh, North Carolina 27606
Phone: (919) 233-8091, Fax: (919) 233-8031
NC License# F-1222
www.mckimcreed.com

COUNTY OF PENDER

PENDER COUNTY

ROCKY POINT/TOPSAIL WATER AND SEWER DISTRICT

HAMPSTEAD / SCOTT'S HILL WELL PROJECT

MECHANICAL

WELL DETAILS

PROJ. START DATE:	2019.12
MCE PROJ. #	00542-0079
DRAWN	MTN
DESIGNED	STM
CHECKED	SJK
PROJ. MGR.	SJK

SCALE
HORIZONTAL: AS NOTED
VERTICAL: N/A

M02.0
DRAWING NUMBER
C
REVISION

STATUS: ISSUED FOR BID
NOT FOR CONSTRUCTION

I:\00542\0079\WATER\80-DRAWINGS\MECHANICAL\M02.0-005420079.DWG 04/21/2020 08:26:24 MORGAN NORVILLE

GENERAL NOTES:

1.0 GENERAL

1.1 ALL WORK IS TO BE PERFORMED IN A GOOD, WORKMANLIKE AND PROFESSIONAL MANNER.

1.2 ALL CONSTRUCTION SHALL BE IN STRICT COMPLIANCE WITH THE REQUIREMENTS OF THE NORTH CAROLINA STATE BUILDING CODE, LATEST EDITION, OR LOCAL BUILDING CODE REQUIREMENTS IF MORE STRINGENT.

1.3 THESE DRAWINGS DO NOT SHOW PROVISIONS FOR SAFETY DURING CONSTRUCTION. IT IS THE RESPONSIBILITY OF THE GENERAL CONTRACTOR TO PROVIDE THE REQUIRED BRACING, SHORING, AND SAFETY DEVICES THROUGHOUT THE CONSTRUCTION OF THIS PROJECT.

2.0 COORDINATION

2.1 STRUCTURAL DRAWINGS SHALL BE USED IN CONJUNCTION WITH AND COORDINATED WITH CIVIL, ELECTRICAL AND MECHANICAL DRAWINGS, INCLUDING VENDOR SUBMITTAL DRAWINGS AND OTHER CONTRACT DOCUMENTS.

2.2 COORDINATE THE EXACT SIZE AND LOCATION OF ALL SLEEVES AND OPENINGS THROUGH WALLS OR CONCRETE SLABS WITH CIVIL, ELECTRICAL AND MECHANICAL DRAWINGS, INCLUDING VENDOR SUBMITTAL DRAWINGS AND OTHER CONTRACT DOCUMENTS.

2.3 ANY DISCREPANCIES BETWEEN ACTUAL CONDITIONS AND THOSE SHOWN ON THESE DRAWINGS ARE TO BE BROUGHT TO THE ATTENTION OF THE STRUCTURAL ENGINEER BEFORE WORK PROCEEDS, INCLUDING ORDERING AND FABRICATING MATERIALS.

2.4 INDEPENDENT TESTING/REVIEW OF MATERIALS SHALL BE PROVIDED AS DEFINED IN PROJECT SPECIFICATIONS. IN GENERAL PROJECT INVOLVES THE FOLLOWING:
- A. SOIL/FILL COMPACTION & BEARING.
- B. C.I.P. REINFORCED CONCRETE.
- C. PRE–CAST CONCRETE.
- D. MASONRY.

2.5 IF COORDINATION OF INFORMATION PRESENTED CONFLICTS w/ THE PROJECT SPECIFICATIONS, THE DRAWINGS WILL TAKE PRECEDENCE.

2.6 IN GENERAL CALL–OUTS ARE FOR NEW CONSTRUCTION U.N.O.. EXISTING CONSTRUCTION CALL–OUTS, ELEVATIONS AND DIMENSIONS OF EXISTING STRUCTURES ARE BASED ON EXISTING RECORD DRAWINGS PROVIDED TO McKIM & CREED. THE (*) SYMBOL ON INDIVIDUAL FACILITY "STRUCTURAL" DRAWINGS INDICATES EXISTING CONSTRUCTION CALL–OUTS, CONDITIONS, ELEVATIONS AND DIMENSIONS TO BE FIELD VERIFIED BY THE GENERAL CONTRACTOR U.N.O. PRIOR TO CONSTRUCTION, INCLUDING ORDERING AND FABRICATING MATERIALS. RECORD DRAWINGS PROVIDED BY PENDER COUNTY OR ROCKY POINT/TOPSAIL WATER & SEWER DISTRICT UTILIZED INCLUDES:
- A. NONE.

2.7 SPECIAL INSPECTIONS (IF APPLICABLE): ALL FOUNDATION SOILS, REINF. STEEL, C.I.P. CONCRETE, CONCRETE MASONRY, STRUCTURAL STEEL & PRE–CAST CONCRETE BUILDINGS WORK SHALL BE REVIEWED AS STATED IN CONJUNCTION w/ THEIR RESPECTIVE NOTES BELOW, CHAPTER 17 OF THE NORTH CAROLINA STATE BUILDING CODE AND THE PROJECT SPECIAL INSPECTIONS STATEMENT IN THE PROJECT SPECIFICATIONS.

3.0 FOUNDATIONS

3.1 DESIGN ALLOWABLE SOIL BEARING PRESSURE – 3,000 PSF IN ACCORDANCE WITH THE PROJECT GEOTECHNICAL REPORT AS PREPARED BY ECS SOUTHEAST, LLP (PROJECT No. 22:28643, DTD. DECEMBER 18, 2019). THE CONTRACTOR IS RESPONSIBLE FOR VERIFYING THIS VALUE PRIOR TO FOUNDATION CONSTRUCTION. IN AREAS WHERE THE SOIL DOES NOT YIELD THIS BEARING STRESS VALUE, ADJUSTMENT IN THE FOOTING DEPTHS AND FOUNDATION DIMENSION MAY BE MADE BY THE ENGINEER BEFORE WORK PROCEEDS. CONTRACTOR IS RESPONSIBLE FOR PERFORMING ANY SUCH ADJUSTMENTS.

3.2 PREPARE THE EXISTING SUBGRADE IN ACCORDANCE w/ THE PROJECT GEOTECHNICAL REPORT AS PREPARED BY ECS SOUTHEAST, LLP (PROJECT No. 22:28643, DTD. DECEMBER 18, 2019). IN THE EVENT UNUSUAL SOIL CONDITIONS ARE UNCOVERED, INCLUDING CONDITIONS THAT DEVIATE FROM THOSE DESCRIBED IN THE PROJECT GEOTECHNICAL REPORT, NOTIFY THE OWNER AND ENGINEER PRIOR TO FOUNDATION CONSTRUCTION FOR INSTRUCTIONS HOW TO PROCEED. ADJUSTMENT IN THE FOOTING DEPTHS AND GENERAL FOUNDATION CONSTRUCTION MAY BE MADE BY THE ENGINEER BEFORE WORK PROCEEDS. CONTRACTOR IS RESPONSIBLE FOR PERFORMING ANY SUCH ADJUSTMENTS.

3.3 FOOTING & BASE SLAB EXCAVATIONS AND FORMS SHALL BE REVIEWED BY AN OWNER'S CONSTRUCTION REPRESENTATIVE PRIOR TO PLACEMENT OF CONCRETE. THE REVIEW SHALL CONFORM TO THE REQUIREMENTS OF CHAPTER 17 OF THE NORTH CAROLINA STATE BUILDING CODE.

3.4 FOOTING & BASE SLAB ELEVATIONS SHALL NOT BE RAISED OR LOWERED WITHOUT APPROVAL OF THE STRUCTURAL ENGINEER.

3.5 ALL EXCAVATIONS SHALL BE ADEQUATELY DEWATERED BEFORE PLACEMENT OF CONCRETE. NO CONCRETE OR CONCRETE FILL SHALL BE PLACED IN STANDING WATER. ACCUMULATION EXCEEDING 1 INCH SHALL BE PUMPED OUT.

3.6 ALL FILL INSIDE THE STRUCTURE/BUILDING's FOOTPRINT AND BELOW FOUNDATION's SHALL BE SELECT MATERIAL FREE FROM ROOTS, TRASH WOOD SCRAPS, AND OTHER EXTRANEOUS MATERIALS. PLACE FILL IN LIFTS NOT EXCEEDING THE RECOMMENDATIONS OF THE PROJECT GEOTECHNICAL REPORT AS PREPARED BY ECS SOUTHEAST, LLP (PROJECT No. 22:28643, DTD. DECEMBER 18, 2019).

3.7 ALL FOOTINGS SHALL BE CENTERED UNDER THE SUPPORTED WALL/COLUMN MEMBER UNLESS NOTED OTHERWISE.

3.8 CONSTRUCTION JOINTS IN FOUNDATION SLABS, WALLS & FOOTINGS SHALL BE MADE AT LOCATIONS SHOWN ON DRAWINGS.

3.9 ANCHOR BOLTS SHALL BE SET BY MEANS OF TEMPLATE. "FLOATING" ANCHOR BOLTS INTO PLACE IS PROHIBITED.

3.10 CONTRACTOR IS TO VERIFY THE ELEVATION AND LOCATION OF ALL EXISTING AND PROPOSED UTILITIES PRIOR TO CONSTRUCTION. ANY "KNOWN" UTILITY LINES DAMAGED WILL BE REPLACED AT THE CONTRACTOR'S EXPENSE. IF ANY "UNKNOWN" UTILITY LINES ARE ENCOUNTERED WHEN EXCAVATING THE CONTRACTOR IS TO CEASE ALL EXCAVATION ACTIVITY UNTIL THE ENGINEER AND OWNER ARE NOTIFIED AND INSTRUCTIONS ARE PROVIDED ABOUT HOW TO PROCEED.

3.11 THE CONTRACTOR SHALL OBTAIN THE OWNER'S PERMISSION BEFORE ENCASING OR BACK FILLING AROUND ANY EXISTING UNDERGROUND STRUCTURE, PIPING, ELECTRICAL, OR OTHER UNDERGROUND WORK.

4.0 REINFORCING STEEL

4.1 BARS SHALL BE ROLLED FROM NEW BILLET–STEEL OF DOMESTIC MANUFACTURE CONFORMING TO "STANDARD SPECIFICATION FOR DEFORMED AND PLAIN BILLET STEEL BARS FOR CONCRETE REINFORCEMENT," ASTM A615, GRADE 60 AND SUPPLEMENTARY REQUIREMENT S–1.

4.2 DETAIL AND FABRICATE REINFORCING STEEL IN ACCORDANCE WITH THE AMERICAN CONCRETE INSTITUTE "ACI DETAILING MANUAL," LATEST PUBLICATION.

4.3 REINFORCING STEEL IN PLACE SHALL BE REVIEWED BY THE OWNER'S CONSTRUCTION REPRESENTATIVE PRIOR TO PLACEMENT OF CONCRETE. THE REVIEW SHALL CONFORM TO THE REQUIREMENTS OF CHAPTER 17 OF THE NORTH CAROLINA STATE BUILDING CODE.

4.4 WELDED WIRE FABRIC SHALL CONFORM TO "STANDARD SPECIFICATION FOR WELDED STEEL WIRE FABRIC FOR CONCRETE REINFORCEMENT," ASTM A1064.

4.5 PLACE WELDED WIRE FABRIC AT CENTER OF SLABS–ON–GRADE AND HOUSEKEEPING PADS, UNLESS NOTED OTHERWISE.

4.6 FABRICATE CONTINUOUS BARS IN SLABS & PADS TO THE LONGEST PRACTICABLE LENGTHS.

4.7 FABRICATE CONTINUOUS BARS IN WALLS & FOOTINGS TO THE LONGEST PRACTICABLE LENGTHS.

4.8 REINFORCING STEEL SHALL NOT BE BENT AFTER BEING PARTIALLY EMBEDDED IN HARDENED CONCRETE.

4.9 BARS SHALL BE COLD BENT AND SHALL NOT BE HEATED FOR ANY REASON.

4.10 REINFORCING BARS SHALL NOT BE WELDED UNLESS NOTED OTHERWISE ON THE DRAWINGS.

4.11 REFERENCE DRAWINGS FOR REQUIREMENTS FOR LAP SPLICING REINFORCING STEEL IN CONCRETE. ALL "LCS" SHALL CONFORM TO CLASS B SPLICE CRITERIA & IT IS ACCEPTABLE TO LAP SPLICE NON "LCS" A MINIMUM 50 BAR DIAMETERS, UNLESS NOTED OTHERWISE.

4.12 LAP SPLICED BARS IN CONCRETE ARE TO BE WIRE TIED.

4.13 LAP SPLICED BARS IN MASONRY ARE TO BE NO FARTHER APART THAN 8".

5.0 CONCRETE

5.1 IN GENERAL CONCRETE SHALL DEVELOP 4,000 psi MINIMUM COMPRESSIVE STRENGTH AT 28 DAYS. IN ADDITION REFERENCE "DESIGN CRITERIA" THIS DWG. & NOTE THE CONCRETE MIX WORK SHALL INCLUDE THE FOLLOWING:
- a.) CEMENT MATERIAL SUPPLIED SHALL BE TYPE I OR TYPE II PORTLAND CEMENT THAT IS IN CONFORMANCE w/ ASTM C150.
- b.) FLY ASH THAT IS IN CONFORMANCE w/ ASTM C618, CLASS F MAY BE INCLUDED IN THE MIX. FLY ASH SHALL BE USED AS A PARTIAL CEMENT REPLACEMENT & NOT EXCEED 25% OF THE TOTAL CEMENTITIOUS CONTENT.
- c.) AGGREGATE SHALL BE "NORMAL" WEIGHT THAT IS IN CONFORMANCE w/ ASTM C33.
- d.) WATER SHALL BE IN CONFORMANCE w/ ASTM C94.
- e.) AIR ENTRAINING ADMIXTURE IS ALLOWED PROVIDED IT IS IN CONFORMANCE w/ ASTM C260. THE TOTAL AIR CONTENT REQUIRED IS 5% ± 1%.
- f.) WATER REDUCING ADMIXTURE IS ALLOWED PROVIDED IT IS IN CONFORMANCE w/ ASTM C494, TYPE A OR D.
- g.) MAXIMUM SLUMP = 3" w/OUT WATER REDUCING ADMIXTURE & 6" w/ A WATER REDUCING ADMIXTURE.
- h.) WATER/CEMENT RATIO (w/c) = 0.45 MAXIMUM.
- i.) DO NOT USE PRODUCTS CONTAINING CALCIUM CHLORIDES.

5.2 CONCRETE WORK SHALL CONFORM TO "BUILDING CODE REQUIREMENTS FOR REINFORCED CONCRETE", ACI 318 & TO "CODE REQUIREMENTS FOR ENVIRONMENTAL ENGINEERING CONCRETE STRUCTURES", ACI 350 (LATEST EDITIONS).

5.3 PLACE 1/2 INCH EXPANSION JOINT MATERIAL BETWEEN EDGES OF SLABS AND VERTICAL SURFACES UNLESS NOTED OTHERWISE.

5.4 PROVIDE CONSTRUCTION OR CONTROL JOINTS IN SLABS & WALLS AT LOCATIONS SHOWN ON DRAWINGS, AT OFFSETS AND CHANGES IN DIRECTION AND AT THIRTY (30) FEET MAXIMUM U.N.O.. GENERAL CONTRACTOR TO PROVIDE CONSTRUCTION JOINT LAYOUT PLAN PER THE PROJECT SPECIFICATIONS PRIOR TO CONSTRUCTION, INCLUDING ORDERING & FABRICATING MATERIALS.

5.5 CHAMFER EXPOSED EDGES OF CONCRETE 3/4 INCH, UNLESS NOTED OTHERWISE.

5.6 CONTRACTOR SHALL BE RESPONSIBLE FOR PROPER CURING OF ALL CONCRETE. CURING METHODS SHALL CONFORM TO "BUILDING CODE REQUIREMENTS FOR REINFORCED CONCRETE", ACI 318, "CODE REQUIREMENTS FOR ENVIRONMENTAL ENGINEERING CONCRETE STRUCTURES" ACI 350 AND "STANDARD PRACTICE FOR CURING CONCRETE," ACI 308, LATEST EDITIONS.

5.7 UNLESS NOTED OTHERWISE DOWELS SHALL BE THE SAME NUMBER AND SIZE AS THE LARGEST VERTICAL BAR TO WHICH THEY ARE SPLICED.

5.8 FINISH REQUIREMENTS FOR THIS PROJECT ARE AS FOLLOWS:
- a.) SLABS–ON–GRADE (INTERIOR):
  - TOPS = UNFORMED LEVEL TROWELED SMOOTH FINISH, w/ SLOPE NOT TO EXCEED SLOPE REQUIRED TO ACCOMMODATE EQUIPMENT & REQ'D TO CONFORM w/ MFG.'s REQUIRED TOLERANCES.

***NOTE: FIELD COORDINATE w/ OWNER SLABS REQUIRING PENETRATING LIQUID FLOOR TREATMENT. WHERE REQUIRED INSTALL WR MEADOWS LIQUI–HARD OR AN APPROVED EQUAL.

  - SIDES = SMOOTH FORMED FINISH WHERE EXPOSED & ROUGH FORMED FINISH WHERE UNEXPOSED.
- b.) SLABS–ON–GRADE (EXTERIOR):
  - TOPS = UNFORMED LEVEL BROOMED FINISH. WHERE REQUIRED TO ACCOMMODATE EQUIPMENT, SLOPE AS REQ'D TO CONFORM w/ MFG.'s REQUIRED TOLERANCES.
  - SIDES = SMOOTH FORMED FINISH WHERE EXPOSED & ROUGH FORMED FINISH WHERE UNEXPOSED.

5.9 CONTRACTOR SHALL SUBMIT REBAR SHOP DRAWINGS FOR APPROVAL TO OWNER PRIOR TO FABRICATION. DO NOT FABRICATE REINFORCING PRIOR TO RECEIPT OF APPROVED SHOP DRAWINGS.

5.10 CONCRETE MIXES TO BE REVIEWED BY THE OWNER'S CONSTRUCTION REPRESENTATIVE PRIOR TO PLACEMENT OF CONCRETE. COMPRESSIVE STRENGTH TEST CYLINDERS TO BE REVIEWED BY THE OWNER'S CONSTRUCTION REPRESENTATIVE THROUGHOUT CONCRETE CONSTRUCTION OF THE PROJECT. THESE REVIEWS SHALL CONFORM TO THE REQUIREMENTS OF CHAPTER 17 OF THE NORTH CAROLINA STATE BUILDING CODE.

5.11 ROUGHEN THE "BASE" CONCRETE POUR SURFACE TO A FULL AMPLITUDE OF 1/4" MINIMUM, WHERE NOTED ON THE CONSTRUCTION DRAWINGS.

5.12 CONCRETE ACCESSORIES AS FOLLOWS:
- a.) PREFORMED WATERSTOPS SHALL BE PVC 6 INCH LONG w/ 3/8 INCH (MIN.) CENTER BULB & TAPERED RIB ENDS AND IN ACCORDANCE w/ THE PROJECT SPECIFICATIONS.
- b.) EXPANSIVE WATERSTOPS SHALL BE ADEKA ULTRA SEAL TYPE MC–2010M. THE WATERSTOPS CAN BE EITHER ADHERED TO THE CONCRETE WITH 3M–2141 BONDING ADHESIVE OR NAILED IN PLACE USING 1.5 INCH CONCRETE NAILS 3 TO 6 INCHES APART.
- c.) CAULK/SEALANT – SONOLASTIC (2) PART POLYSULFIDE.
- d.) BONDING AGENT – SHALL BE STRUCTURAL EPOXY ADHESIVE CONFORMING TO ASTM C–881 TYPE I STRENGTH AND II, GRADE 2, CLASS B AND C WITH A MINIMUM BOND STRENGTH OF 1900 PSI.
  - 1.) SIKA ARMATEC 110 EpoCem.

6.0 GROUT

6.1 PROVIDE NON–SHRINK GROUT UNDER ALL COLUMN BASE PLATES AND BEAM BEARING PLATES AND ELSEWHERE AS INDICATED ON DRAWINGS. NON–SHRINK GROUT SHALL CONFORM TO ASTM C1107.

6.2 GROUT SHALL BE NON–METALLIC AND NON–STAINING AND HAVE A MINIMUM COMPRESSIVE STRENGTH OF 5,000 psi.

7.0 MASONRY

7.1 THE CONSTRUCTION OF MASONRY SHALL COMPLY WITH THE REQUIREMENTS OF ACI 530.1/ASCE6/TMS 602. SPECIAL ATTENTION SHALL BE GIVEN TO THE MOISTURE CONTENT AND WEATHER CONDITIONS DURING CONSTRUCTION. REFERENCE BUILDING SERIES AND/OR THESE STRUCTURAL DRAWINGS FOR LOCATIONS OF VERTICAL CONTROL/EXPANSION JOINTS.

7.2 CONCRETE MASONRY UNITS SHALL CONFORM TO THE REQUIREMENTS OF ASTM C90. UNITS ARE TO BE NORMAL WEIGHT UNLESS NOTED OTHERWISE.

7.2 REQUIRED COMPRESSIVE STRENGTH OF MASONRY ASSEMBLAGE, f'm, IS 1,900 psi (MINIMUM), U.N.O. ON THE DRAWINGS.

7.3 MORTAR SHALL CONFORM TO THE REQUIREMENTS OF ASTM C270 AND SHALL BE TYPE "S" w/ PORTLAND CEMENT (ASTM C150), MASONRY SAND (ASTM C144) AND HYDRATED LIME (ASTM C207). CALCIUM CHLORIDE IS PROHIBITED.

7.4 GROUT/CONCRETE FILL FOR HOLLOW MASONRY UNITS SHALL HAVE A MINIMUM 28 DAY COMPRESSIVE STRENGTH OF 3,000 psi & IF CONCRETE, SHALL BE NORMAL WEIGHT PEA–GRAVEL CONCRETE.

7.5 JOINT REINFORCING: "LADDER/TRUSS TYPE" REFERENCE PROJECT SPECIFICATIONS AND/OR THESE STRUCTURAL DRAWINGS.

7.6 JOINT ANCHORS: REFERENCE PROJECT SPECIFICATIONS.

7.7 WALL TO COLUMN TIES: REFERENCE PROJECT SPECIFICATIONS.

7.8 MASONRY CONSTRUCTION INCLUDING GROUT FILL, MORTAR AND HORIZONTAL & VERTICAL REINFORCING TO BE REVIEWED BY THE THE OWNER'S CONSTRUCTION REPRESENTATIVE THROUGHOUT MASONRY & CONCRETE CONSTRUCTION OF THE PROJECT. THESE REVIEWS SHALL CONFORM TO THE REQUIREMENTS OF CHAPTER 17 OF THE NORTH CAROLINA STATE BUILDING CODE.

8.0 STRUCTURAL STEEL

8.1 STEEL SHALL CONFORM TO "STANDARD SPECIFICATION FOR STRUCTURAL STEEL," ASTM A36 (Fy=36 ksi) FOR ANGLES, PLATES & CHANNELS. WIDE FLANGE SECTIONS SHALL CONFORM TO ASTM A572 (Fy=50ksi). HOLLOW STEEL SECTIONS (HSS) SHALL CONFORM TO ASTM A500, GRADE B (Fy=46 ksi). STEEL PIPE SHALL CONFORM TO ASTM A53, GRADE B, (Fy=35 ksi).

8.2 STEEL WORK SHALL CONFORM TO "SPECIFICATION FOR THE DESIGN, FABRICATION AND ERECTION OF STRUCTURAL STEEL BUILDINGS", OF THE AMERICAN INSTITUTE OF STEEL CONSTRUCTION, INC., (LATEST EDITION), INCLUDING ALL SUPPLEMENTS AND THE "CODE OF STANDARD PRACTICE FOR STEEL BUILDINGS AND BRIDGES", (LATEST EDITION).

8.3 CONNECTION BOLTS SHALL BE 3/4 INCH DIAMETER CONFORMING TO "STANDARD SPECIFICATION FOR HIGH–STRENGTH BOLTS FOR STRUCTURAL STEEL JOINTS", ASTM A325, UNLESS NOTED OTHERWISE CONNECTIONS ARE BEARING TYPE WITH THREADS EXCLUDED FROM SHEAR PLANES (A325x).

8.4 WELDING SHALL BE IN ACCORDANCE WITH THE LATEST EDITION OF THE AMERICAN WELDING SOCIETY AWS D1.1 "STRUCTURAL WELDING CODE". WELDING SHALL BE PERFORMED BY CERTIFIED PERSONNEL WHO HAVE BEEN PREVIOUSLY QUALIFIED BY TEST PRESCRIBED IN THE AWS "STRUCTURAL WELDING CODE". ELECTRODES SHALL CONFORM TO AWS 5.5, E70XX.

8.5 THE CONTRACTOR SHALL PROVIDE ADEQUATE TEMPORARY BRACING, SHORING, AND GUYING OF STEEL FRAMING AGAINST WIND, CONSTRUCTION LOADS, AND OTHER TEMPORARY FORCES UNTIL SUCH PROTECTION IS NO LONGER REQUIRED FOR THE SAFE SUPPORT OF THE FRAMING.

8.6 ALL COPES, BLOCKS, CUTS, CUT–OFFS AND OTHER CUTTING OF STRUCTURAL MEMBERS SHALL HAVE ALL RE–ENTRANT CORNERS SHAPED, AND NOTCH–FREE TO A RADIUS OF AT LEAST 1/2 INCH. THE FILLET AND ITS CONTIGUOUS CUTS SHALL MEET WITHOUT OFFSET OR CUTTING PAST THE POINT OF TANGENCY.

8.7 ANCHOR BOLTS SHALL BE ASTM F1554 OR ASTM A36 & SHALL BE EITHER HEADED w/ NUTS TACK WELDED TO BOLTS OR NON–HEADED w/ HOOKS AS REQUIRED BY THE DRAWINGS. PROVIDE (2) NUTS AND WASHERS WITH EACH ANCHOR BOLT AT COLUMNS UNLESS NOTED OTHERWISE. ANCHOR BOLTS FOR EQUIPMENT & OTHER ASSEMBLIES MAY BE POST APPLIED ANCHOR ASSEMBLIES AS INDICATED ON THE DRAWINGS.

8.8 OVERSIZED AND SLOTTED HOLES SHALL NOT BE USED FOR BOLTED CONNECTIONS ON THIS PROJECT EXCEPT AT LOCATIONS NOTED ON DRAWINGS.

8.9 SPLICING OF STRUCTURAL STEEL MEMBERS IS PROHIBITED WITHOUT THE APPROVAL OF THE STRUCTURAL ENGINEER, AS TO LOCATION AND TYPE OF SPLICE. ANY MEMBER HAVING A SPLICE NOT SHOWN AND DETAILED ON THE SHOP DRAWINGS WILL BE REPLACED.

8.10 PRE–GROUTING BASE PLATES IS NOT PERMITTED.

8.11 ALL HOLES IN STRUCTURAL STEEL ARE TO BE PUNCHED OR DRILLED. FLAME CUTTING OF STEEL IS STRICTLY PROHIBITED.

8.12 ALL DESIGN, DETAILING, FABRICATION AND ERECTION SHALL BE IN ACCORDANCE WITH THE LATEST EDITION OF THE AMERICAN INSTITUTE OF STEEL CONSTRUCTION (AISC) MANUAL OF STEEL CONSTRUCTION.

8.13 IN GENERAL SHOP CONNECTIONS SHALL BE EITHER WELDED OR BOLTED AND FIELD CONNECTIONS SHALL BE BOLTED UNLESS NOTED OTHERWISE.

8.14 FABRICATOR/CONTRACTOR SHALL SUBMIT SHOP DRAWINGS FOR OWNER/ENGINEER APPROVAL PRIOR TO FABRICATION. ALL SHOP DRAWINGS MAY BE EXPEDITED IF THE FABRICATOR ADHERES CLOSELY TO THE DETAILS, NOTES, AND INSTRUCTIONS, SHOWN ON THE DRAWINGS.

8.15 ALL GALVANIZED MATERIALS THAT ARE FIELD CUT, FIELD WELDED OR DAMAGED IN SURFACE FINISH SHALL BE CLEANED AND RE–COATED w/ A 98% ZINC RICH OXIDE AND IN CONFORMANCE w/ THE PROJECT SPECIFICATIONS.

8.16 STRUCTURAL STEEL FRAMING & DECKING ERECTION TO BE REVIEWED BY THE THE OWNER'S CONSTRUCTION REPRESENTATIVE THROUGHOUT CONCRETE & STEEL CONSTRUCTION OF THE PROJECT. THESE REVIEWS SHALL CONFORM TO THE REQUIREMENTS OF CHAPTER 17 OF THE NORTH CAROLINA STATE BUILDING CODE.

9.0 ALUMINUM (NOT APPLICABLE)

10.0 PRE–CAST CONCRETE

10.1 PRE–CAST CONCRETE FIELD ASSEMBLED BUILDINGS TO BE DESIGNED BY THE PRE–CAST BUILDING MANUFACTURER UTILIZING "DESIGN LOADS" PROVIDED ON THE RESPECTIVE FACILITY STRUCTURAL DRAWINGS AND PROJECT SPECIFICATIONS. COORDINATE w/ THE BUILDING, ELECTRICAL, MECHANICAL AND VENDOR EQUIPMENT DRAWINGS FOR ADDITIONAL MATERIALS REQUIRED FOR CALCULATION OF THE DEAD LOADS, LIVE LOADS AND EQUIPMENT LOADS, THAT MAY BE SUSPENDED FROM THE SIDES OF WALL PANELS AND UNDERSIDE OF THE ROOFING PANELS.

10.2. PRE–CAST CONCRETE FIELD ASSEMBLED BUILDINGS MANUFACTURER IS REQUIRED TO SUBMIT DRAWINGS AND CALCULATION PACKAGES SEALED, SIGNED AND DATED BY AN ENGINEER CURRENTLY LICENSED BY THE STATE OF NORTH CAROLINA. FABRICATION OF THE PRE–CAST FIELD ASSEMBLED BUILDING COMPONENTS SHOULD NOT OCCUR UNTIL "FINAL" APPROVAL OF THE MANUFACTURER'S DRAWINGS AND CALCULATIONS SUBMITTALS.

10.3 REFERENCE BUILDING AND STRUCTURAL DRAWINGS FOR PRE–CAST CONCRETE FIELD ASSEMBLED BUILDINGS FOUNDATION SYSTEMS AND BEARING ELEVATIONS, DIMENSIONS, WALL AND ROOF OPENINGS, EAVE HEIGHTS & ROOF SLOPE REQUIREMENTS.

10.4 REFERENCE BUILDING DRAWINGS FOR ALL INTERIOR AND EXTERIOR WALL AND ROOF PANEL FINISH REQUIREMENTS.

10.5 PRE–CAST FIELD ASSEMBLED BUILDINGS WALL AND ROOF PANELS TO HAVE A MINIMUM 28 DAY COMPRESSIVE STRENGTH OF 5,000 PSI U.N.O. BY THE PRE–CAST CONCRETE FIELD ASSEMBLED BUILDINGS MANUFACTURER.

10.6 REFERENCE ALL PROJECT SPECIFICATIONS RELATED TO THE PRE–CAST CONCRETE FIELD ASSEMBLED BUILDINGS FOR ADDITIONAL REQUIREMENTS AND INFORMATION.

10.7 CONSTRUCTION ACTIVITIES RELATED TO THE PRE–CAST FIELD ASSEMBLED BUILDINGS TO BE REVIEWED BY THE THE OWNER'S CONSTRUCTION REPRESENTATIVE THROUGHOUT CONCRETE CONSTRUCTION OF THE PROJECT. THESE REVIEWS SHALL CONFORM TO THE REQUIREMENTS OF CHAPTER 17 OF THE NORTH CAROLINA STATE BUILDING CODE AND "COORDINATION" NOTE 2.7 ABOVE.

11.0 PRE–ENGINEERED TIMBER TRUSS (NOT APPLICABLE)

12.0 PRE–ENGINEERED METAL BUILDINGS (NOT APPLICABLE)

13.0 MISCELLANEOUS BUILDING (NOT APPLICABLE)

14.0 ABBREVIATIONS

14.1 THE FOLLOWING LIST OF ABBREVIATIONS IS NOT INTENDED TO REPRESENT ALL THOSE USED ON THE DRAWINGS, BUT TO SUPPLEMENT THE MORE COMMON ABBREVIATIONS USED.

ADD'L	=	ADDITIONAL	LCS	=	LIQUID CONTAINMENT STRUCTURES
AL	=	ALUMINUM	LLH	=	LONG LEG HORIZONTAL
ALT.	=	ALTERNATE	LLV	=	LONG LEG VERTICAL
BLDG.	=	BUILDING	L.P.	=	LOW POINT
BLK.	=	BLOCK	LSL	=	LONG SLOTTED
BM.	=	BEAM	MAS.	=	MASONRY
B.O.	=	BOTTOM OF	MAT'L.	=	MATERIAL
BRG.	=	BEARING	MFG.	=	MANUFACTURER
C.I.P.	=	CAST–IN–PLACE	MIN.	=	MINIMUM
CLR.	=	CLEAR	MTL.	=	METAL
CMU	=	CONC. MAS. UNIT	NOM.	=	NOMINAL
C.O.	=	CLEAN OUT	N.S.	=	NEAR SIDE
COL	=	COLUMN	N.T.S.	=	NOT TO SCALE
CONC.	=	CONCRETE	O.C.	=	ON CENTER
CONN.	=	CONNECTION	O/F	=	OUTSIDE FACE
CONST.	=	CONSTRUCTION	O/H	=	OVERHANG
CONT.	=	CONTINUOUS	O/O	=	OUT TO OUT
COORD.	=	COORDINATE	OPNG.	=	OPENING
CTR.	=	CENTER	OPP.	=	OPPOSITE
CTR'D.	=	CENTERED	ORIENT.	=	ORIENTATION
DBL.	=	DOUBLE	PLCS.	=	PLACES
DIR.	=	DIRECTION	P.P.	=	PUMP PAD
DWG.'s.	=	DRAWINGS	RAD.	=	RADIUS
EA.	=	EACH	REF.	=	REFERENCE
EL	=	ELEVATION	REINF.	=	REINFORCING
E.O.	=	EDGE OF	REQ'D.	=	REQUIRED
E.Q.	=	EQUAL	RET.	=	RETAINING
EQUIP.	=	EQUIPMENT	ROT.	=	ROTATE
EXIST.	=	EXISTING	SIM.	=	SIMILAR
EXP.	=	EXPANSION	SPA.	=	SPACED
FLG.	=	FLANGE	SPECS.	=	SPECIFICATIONS
FDN.	=	FOUNDATION	S.S.	=	STAINLESS STEEL
F.S.	=	FAR SIDE	SSL	=	SHORT SLOTTED
FT.	=	FEET	STD.	=	STANDARD
FTG.	=	FOOTING	STL.	=	STEEL
GA.	=	GAGE	T&B	=	TOP & BOTTOM
GALV.	=	GALVANIZED	T/D	=	TURN DOWN
H.P.	=	HIGH POINT	THK.	=	THICK
HRS.	=	HOURS	THK'D	=	THICKENED
I/F	=	INSIDE FACE	T.O.	=	TOP OF
INFO.	=	INFORMATION	T.O.S	=	TOP OF STEEL
INTR.	=	INTERIOR	TYP.	=	TYPICAL
JST.	=	JOIST	U.N.O.	=	UNLESS NOTED OTHERWISE
JT.	=	JOINT	XB	=	CROSS BRACE
			VERT.	=	VERTICAL
			W.P.	=	WORK POINT

DESIGN LOADS:

DESIGN LOADS BASIS OF DESIGN:
NORTH CAROLINA STATE BUILDING CODE 2018 (INTERNATIONAL BUILDING CODE (IBC) 2015 w/ NC AMENDMENTS) & ASCE 7–10 FOR WIND & SEISMIC DESIGN

EQUIP. LOAD: 15.5 k (GENERATOR)
LIVE LOAD: 300 PSF (FLOORS)
ROOF: 40 PSF
SNOW: 10 PSF (GROUND), IMPORTANCE FACTOR (Is): 1.10
WIND ZONE: 155 mi/hr, EXPOSURE C, OCCUPANCY CATEGORY III

CALCULATED WIND BASE SHEARS:
Vx = 16.2 k & Vy = 4.9 k (WELL HOUSE)
Vx = 1.8 k & Vy = 4.4 k (GENERATOR)

COMPONENTS & CLADDING WIND PRESSURES: (WELL HOUSE)
ZONE 1 ROOF PRESSURES = –70.2 PSF
ZONE 2 ROOF PRESSURES = –110.2 PSF
ZONE 3 ROOF PRESSURES = –150.2 PSF
ZONE 4 WALL PRESSURES = 48.0 PSF & –48.0 PSF
ZONE 5 WALL PRESSURES = 48.0 PSF & –88.0 PSF

SEISMIC:
SEISMIC DESIGN PARAMETERS:

RESPONSE MODIFICATION COEFFICIENT	R	= 3.0 (WELL HOUSE) & 1.25 (GEN.)
SPECTRAL RESPONSE ACCELERATION............SHORT PERIOD	S(DS)	= 19.4% (WELL HOUSE #4)
SPECTRAL RESPONSE ACCELERATION.......1 SECOND PERIOD	S(D1)	= 12.9% (WELL HOUSE #4)
SPECTRAL RESPONSE ACCELERATION............SHORT PERIOD	S(DS)	= 22.0% (WELL HOUSE #6)
SPECTRAL RESPONSE ACCELERATION.......1 SECOND PERIOD	S(D1)	= 10.6% (WELL HOUSE #6)
SEISMIC OCCUPANCY CATEGORY..		= III
SITE CLASS..		= D
SEISMIC DESIGN CATEGORY..	SDC	= C
IMPORTANCE FACTOR..	Ie	= 1.25

BASIC STRUCTURAL SYSTEM BUILDING/NON–BUILDING TYPE STRUCTURE:
BEARING WALL – ORDINARY PRE–CAST SHEAR WALLS (WELL HOUSE).
"OTHER" SELF SUPPT. STRUCTURE NOT COVERED BY TABLE 15.4–2 (GENERATOR).

ANALYSIS PROCEDURE = EQUIVALENT LATERAL FORCE

SEISMIC BASE SHEAR: Vx = Vy = 6.6 k (WELL HOUSE) & Vx = Vy = 1.3 k (GENERATOR)

ARCHITECTURAL, MECHANICAL COMPONENTS ANCHORED? Y

SOIL BEARING: FIELD TEST PER PROJECT GEOTECH REPORT = 3,000 PSF
REF. "FOUNDATIONS" NOTE 3.1.

DESIGN CRITERIA:

CONCRETE 28 DAY COMPRESSIVE STRENGTH:

MISC. CONCRETE:	REF. STRUCTURAL NOTE 5.1
REINFORCING STEEL:	ASTM A615, GRADE 60
WELDED WIRE FABRIC:	NOT APPLICABLE
STRUCTURAL STEEL:	REF. STRUCTURAL NOTE 8.1
ALUMINUM:	REF. STRUCTURAL NOTE 9.2
BOLTS SHALL BE 3/4"ø ASTM A325:	NOT APPLICABLE
ANCHOR BOLTS SHALL BE 3/4"ø ASTM F1554:	REF. STRUCTURAL NOTE 8.3
STEEL ELECTRODES SHALL CONFORM TO:	AWS 5.5 E70XX
SOIL BEARING CAPACITY:	REF. STRUCTURAL NOTE 3.1 (NOT APPLICABLE)

LEGEND:

ENLARGED PLAN AREA, DETAIL =

CONC. SLAB, ETC. = (EXISTING)

CONC. CMU CLOCK = (EXISTING)

GROUT = (EXISTING)

BRICK = (EXISTING)

DETAIL OR SECTION NUMBER/SHOWN ON SHEET = X–SY.Y X–SY.Y

PROJECT NORTH = NORTH

ELEVATION DATUM =

ELEVATION NUMBER/SHOWN ON SHEET = X–SY.Y

ELEVATIONS X'–X" (Y.YY') = X'–X" = DISTANCE TO/FROM FACILITY REFERENCE EL 0'–0"
Y.YY' = EQUIVALENT SITE EL VERTICAL DATUM

REV.NO.	DESCRIPTION	DATE
B	ISSUED FOR BID - NOT FOR CONSTRUCTION	07 APR 2020
A	FINAL DESIGN - NOT FOR CONSTRUCTION	02 MAR 2020

REVISIONS

NORTH CAROLINA PROFESSIONAL SEAL 24995 ENGINEER WILLIAM F. BAND 04.07.20

McKIM&CREED
Venture IV Building, Suite 500
1730 Varsity Drive
Raleigh, North Carolina 27606
Phone: (919) 233-8091, Fax: (919) 233-8031
NC License# F-1222
www.mckimcreed.com

COUNTY OF PENDER

PENDER COUNTY
ROCKY POINT/TOPSAIL WATER AND SEWER DISTRICT

HAMPSTEAD / SCOTT'S HILL WELL PROJECT

STRUCTURAL

STRUCTURAL GENERAL NOTES, DESIGN LOADS, CRITERIA & LEGEND

PROJ. START DATE:	2019.12
MCE PROJ. #	00542-0079
DRAWN	WFB
DESIGNED	WFB
CHECKED	WFB
PROJ. MGR.	AWB

SCALE
HORIZONTAL: NA
VERTICAL: NA

S0.0
DRAWING NUMBER
B
REVISION

STATUS: ISSUED FOR BID NOT FOR CONSTRUCTION

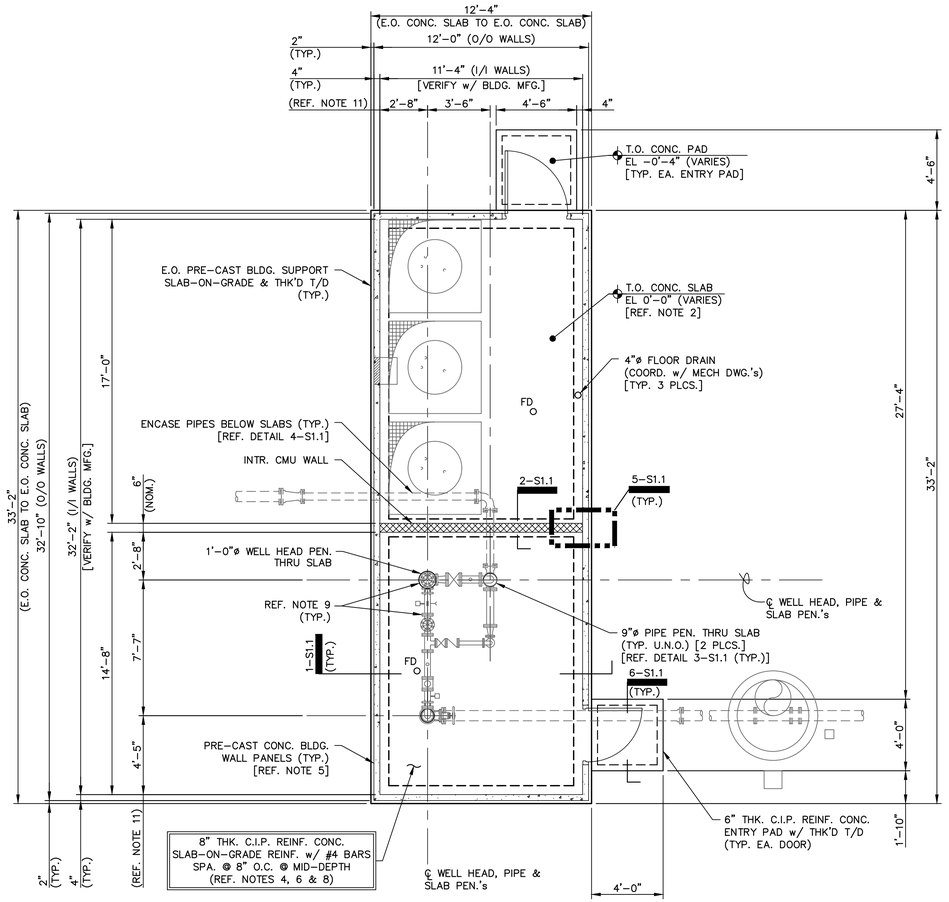

NORTH (PLAN) [REF. NOTE 1]

1 - PLAN - TYP. WELL HOUSE FOUNDATION

SCALE: 1/4" = 1'-0"

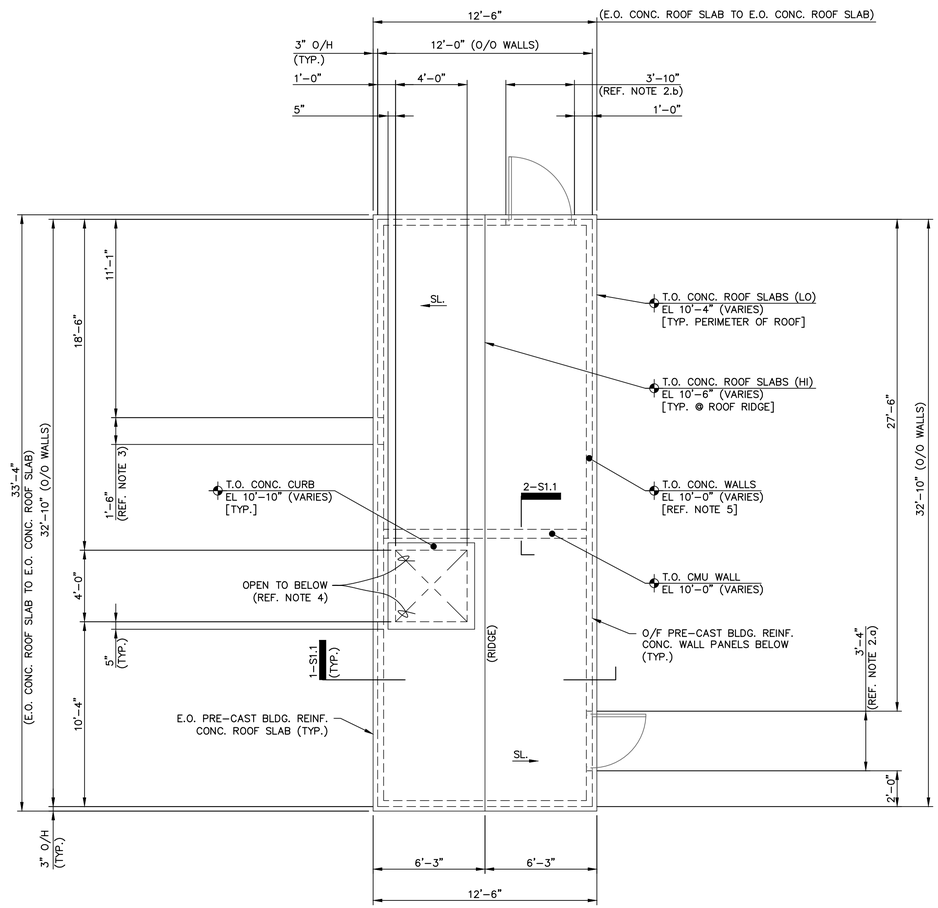

NORTH (PLAN) [REF. PLAN NOTE 1]

2 - PLAN - TYP. WELL HOUSE ROOF

SCALE: 1/4" = 1'-0"

FOUNDATION PLAN NOTES:

1. TRUE NORTH VARIES PER WELL HOUSE SITE. COORDINATE w/ CIVIL DWG.'s AS REQUIRED FOR BUILDING ORIENTATION IN REGARDS TO THE DIRECTION OF TRUE NORTH.
2. REFERENCE ELEVATION FOR THE WELL HOUSE BUILDING FACILITIES IS THE BUILDING's SLAB-ON-GRADE T.O. CONC. ELEVATION. THE EQUIVALENT N.A.V.D.-88 ELEVATION WILL VARY PER SITE. REFERENCE CIVIL DWG.'s FOR ADDITIONAL INFORMATION. FOR THE VARIOUS WELL HOUSE BUILDING FACILITIES NOTE THE FOLLOWING:
   a.) KIWANIS SITE "WELL No. 4": T.O. CONC. EL 0'-0" = EL 30'-6" (30.50').
   b.) ANNEX SITE "WELL No. 6": T.O. CONC. EL 0'-0" = EL 55'-6" (55.50').
3. GRADE ELEVATIONS AROUND THESE STRUCTURE VARIES. REFERENCE CIVIL DRAWINGS FOR ADDITIONAL INFORMATION. FOR THE GRADE ELEVATIONS AT THE VARIOUS WELL HOUSE BUILDING FACILITIES NOTE THE FOLLOWING:
   a.) KIWANIS SITE "WELL No. 4": GRADE EL IS 30.00' (±).
   b.) ANNEX SITE "WELL No. 6": GRADE EL IS 55.00' (±).
4. PREPARE SUBGRADES FOR THESE FACILITY's PER THE RECOMMENDATIONS OF THE PROJECT GEOTECHNICAL REPORT. IN GENERAL FOUNDATION ASSEMBLIES ARE SHALLOW FOUNDATIONS REQUIRING CUT/FILL OF SUBGRADE SOILS. REFERENCE STRUCTURAL GENERAL NOTES 3.1 THRU 3.11 ON DWG. S0.0 FOR ADDITIONAL REQUIREMENTS & INFORMATION.
5. THE WELL HOUSE BUILDINGS ARE PRE-CAST REINFORCED CONCRETE BLDG.'s DESIGNED & ENGINEERED BY A VENDOR EXPERIENCED IN THE DESIGN & CONSTRUCTION OF PRE-CAST REINFORCED CONCRETE BLDG.'s. THE DESIGN SHALL BE IN ACCORDANCE w/ THE PROJECT SPECIFICATIONS AND CONTRACT DRAWINGS. REFERENCE THE PROJECT SPECIFICATIONS, STRUCTURAL GENERAL NOTES 10.1 THRU 10.7 ON DWG. S0.0 AND THE MECHANICAL "M" & STRUCTURAL "S" SERIES DRAWINGS FOR ADDITIONAL INFORMATION BUILDING REQUIREMENTS.
6. CONSTRUCT THE WELL HOUSE BUILDING's SUPPORT SLABS-ON-GRADE w/ THE TOP SURFACES LEVEL AND w/IN THE THE BUILDING MFG.'s ALLOWED TOLERANCES. IN ADDITION PROVIDE GROUT PADS BELOW THE BUILDING ANCHORAGE ASSEMBLIES AND/OR WALL PANELS IF REQUIRED BY THE BUILDING MANUFACTURER.
7. REFERENCE THE PRE-CAST CONCRETE BUILDING MFG. DRAWINGS FOR COORDINATION & INSTALLATION OF ANCHORING THE BUILDING WALL PANELS TO THE SLAB-ON-GRADE.
8. ALTHOUGH NOT SHOWN IN SECTIONS & DETAILS ON THE "S" SERIES DWG.'s, INSTALL VAPOR BARRIER BELOW THE SUPPORT SLABS-ON-GRADE. THE VAPOR BARRIER SHALL BE 10 MIL THICKNESS (MIN.). REFERENCE PROJECT SPECIFICATIONS FOR ADD'L VAPOR BARRIER REQUIREMENTS.
9. EQUIPMENT LAYOUTS ARE SHOWN FOR GENERAL INFO ONLY. REFERENCE CIVIL, ELECTRICAL & MECHANICAL DRAWINGS FOR LOCATIONS & INFO REGARDING SLAB PENETRATIONS, PIPING, CONDUIT & MISCELLANEOUS EQUIPMENT EITHER SHOWN OR NOT SHOWN.
10. REFERENCE CIVIL & MECHANICAL DRAWINGS FOR FOR DRAIN & PIPING REQUIREMENTS.
11. VERIFY DIM. STRING w/ MECH. DWG.'s.
12. REFERENCE DWG. S0.0 FOR ADDITIONAL GENERAL NOTES, MATERIAL SPECIFICATIONS & REQUIREMENTS, DESIGN CRITERIA AND LEGEND.

ROOF PLAN NOTES:

1. TRUE NORTH VARIES PER WELL HOUSE SITE. COORDINATE w/ CIVIL DWG.'s AS REQUIRED FOR BUILDING ORIENTATION IN REGARDS TO THE DIRECTION OF TRUE NORTH.
2. DIMENSIONS INDICATE DOOR OPENING's IN CONCRETE WALL PANELS BELOW. NOTE THE FOLLOWING:
   a.) DOOR "D1" OPNG. = 3'-4" WIDE x 6'-10" HIGH.
   b.) DOOR "D2" OPNG. = 3'-10" WIDE x 6'-10" HIGH.
3. DIMENSION INDICATES 1'-6" WIDE x 1'-6" HIGH EXHAUST FAN/LOUVER OPENING IN CONCRETE WALL PANEL BELOW. COORDINATE w/ "B" & "E" SERIES DRAWINGS FOR ADDITIONAL INFORMATION BUILDING REQUIREMENTS.
4. 4'-0" SQUARE ACCESS HATCH OPENING IN THE PRE-CAST REINFORCED CONCRETE BUILDING's ROOF SLAB FOR WELL PUMP REMOVAL & ACCESS. HATCH ASSEMBLY IS NOT SHOWN FOR CLARITY. REFERENCE & COORDINATE w/ "B" & "M" SERIES DRAWINGS & PROJECT SPECS FOR ADDITIONAL INFORMATION.
5. REFERENCE "FOUNDATION PLAN" NOTE 2 FOR THE WELL HOUSE BUILDING REFERENCE ELEVATIONS.
6. REFERENCE DWG. S0.0 FOR ADDITIONAL GENERAL NOTES, MATERIAL SPECIFICATIONS & REQUIREMENTS, DESIGN CRITERIA AND LEGEND.

REV NO.	DESCRIPTION	DATE
B	ISSUED FOR BID - NOT FOR CONSTRUCTION	07 APR 2020
A	FINAL DESIGN - NOT FOR CONSTRUCTION	02 MAR 2020

REVISIONS

NORTH CAROLINA PROFESSIONAL SEAL 24995 ENGINEER WILLIAM F. BAND 04.07.20

McKIM&CREED
Venture IV Building, Suite 500
1730 Varsity Drive
Raleigh, North Carolina 27606
Phone: (919) 233-8091, Fax: (919) 233-8031
NC License# F-1222
www.mckimcreed.com

PENDER COUNTY

ROCKY POINT/TOPSAIL WATER AND SEWER DISTRICT

HAMPSTEAD / SCOTT'S HILL WELL PROJECT

STRUCTURAL

WELL HOUSE TYPICAL FOUNDATION & ROOF PLANS

PROJ. START DATE:	2019.12
MCE PROJ. #	00542-0079
DRAWN	WFB
DESIGNED	WFB
CHECKED	WFB
PROJ. MGR.	AWB

SCALE
HORIZONTAL: AS NOTED
VERTICAL: NA

S1.0
DRAWING NUMBER
B
REVISION

STATUS: ISSUED FOR BID NOT FOR CONSTRUCTION

I:\00542\0079\WATER\80-DRAWINGS\STRUCTURAL\S10-SC101-05420079.DWG 04/07/2020 13:59:22 BILL BAND

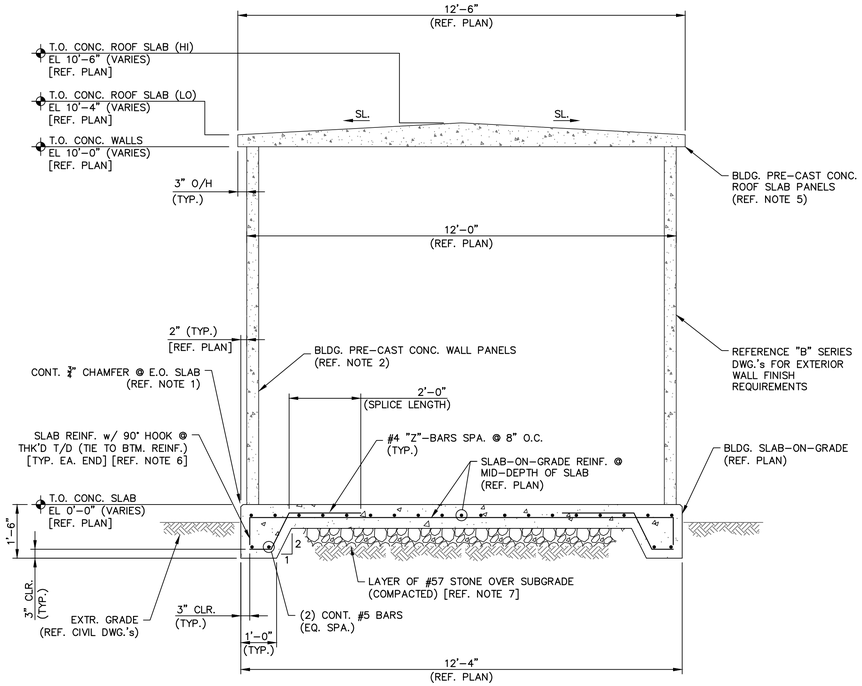

1 - SECTION - THRU WELL HOUSE FOUNDATION

SCALE: 1/2" = 1'-0"

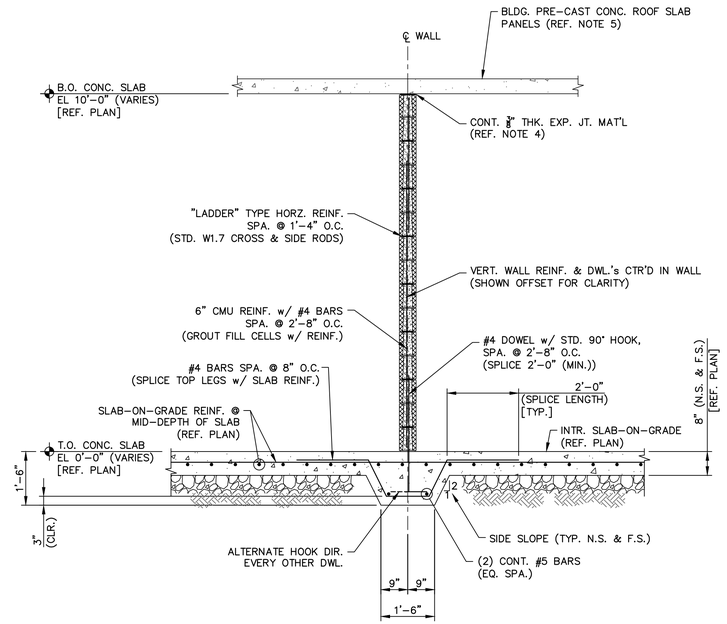

2 - SECTION - THRU WELL HOUSE INTR. CMU WALL

SCALE: 1/2" = 1'-0"

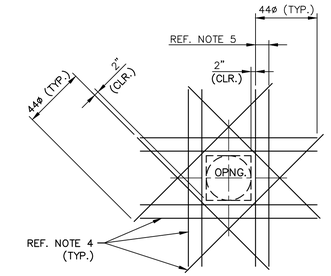

NOTES:
1. USE THIS DETAIL FOR PENETRATIONS 8" OR LARGER. FOR SMALLER OPENINGS BEND BARS IN FIELD PER ACI 350 LATEST EDITION.
2. PLACE EXTRA BARS OF THE SAME SIZE AS THE INTERRUPTED BARS AT EACH SIDE OF OPENINGS. QUANTITY OF EXTRA BARS AT EACH SIDE SHALL EQUAL HALF THE QUANTITY OF INTERRUPTED BARS, EXCEPT WHERE NOTED OTHERWISE. PROVIDE ONE DIAGONAL BAR EACH SIDE OF OPENING, SIZE TO BE EQUAL TO MAIN REINFORCING. LARGER ø BAR CONTROLS IF HORZ. & VERT. BARS DIFFER (TYP. EA. FACE).
3. ø SYMBOL = BAR DIAMETERS.
4. WHERE BAR IS INTERRUPTED BY A CJ OR CONC. EDGE BEND BAR PARALLEL TO THE JOINT EDGE & PROVIDE MINIMUM STD. HOOK BAR LEG LENGTH (U.N.O.).
5. SPACE THE ADD'L BARS @ 1/2 THE REQ'D BAR SPACING.

3 - DETAIL - TYP. SLAB PEN. REINF.

SCALE: 3/8" = 1'-0"

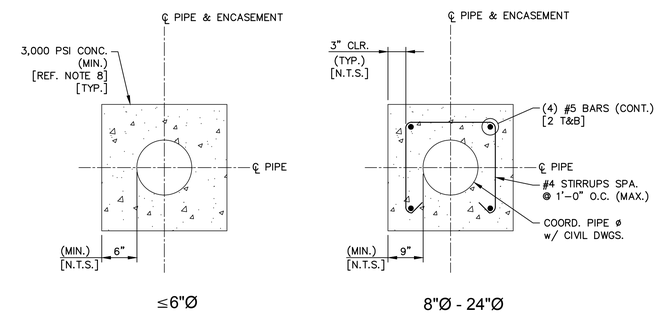

≤6"Ø 8"Ø - 24"Ø

4 - DETAIL - TYP. PIPE ENCASING

SCALE: 1/2" = 1'-0"

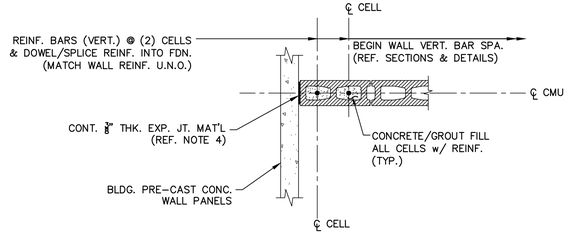

5 - DETAIL - TYP. MAS. END WALL REINF.

SCALE: 3/4" = 1'-0"

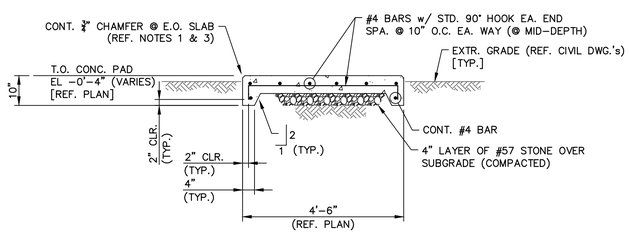

6 - SECTION - THRU ENTRY DOOR PAD

SCALE: 1/2" = 1'-0"

NOTES:

1. DO NOT CHAMFER @ THE JT. BTWN. THE BUILDING SLAB-ON-GRADE & THE ENTRY/EGRESS DOOR PAD.
2. REFERENCE BLDG. MFG.'s "APPROVED" SUBMITTAL FOR WALL THICKNESS & CONNECTIONS TO THE SLAB-ON-GRADE.
3. EXPANSION JT. BETWEEN ENTRY PAD & THE SLAB-ON-GRADE THK'D T/D SHALL BE A VERSATILE, RESILIENT, FLEXIBLE NON-EXTRUDING JOINT ASSEMBLY CONSISTING OF EXTERIOR GRADE CELLULAR FIBER MATERIAL FULLY BONDED & SATURATED w/ ASPHALT. EXPANSION JOINT TO CONFORM w/ ASTM D1751. INSTALL FIBRE EXPANSION JOINT BY WR MEADOWS OR AN APPROVED EQUAL. CAULK & SEAL THE TOP OF THE JOINT.
4. EXPANSION JT. BETWEEN THE CMU WALL & THE PRECAST BUILDING WALL & ROOF SLAB PANELS SHALL BE A LIGHTWEIGHT, NON-ABSORBENT FLEXIBLE FOAM COMPOSED OF OF SYNTHETIC FOAM OF ISOMERIC POLYMERS THAT EXIST IN A CLOSED CELL STRUCTURE & CONFORMS TO ASTM D1752. INSTALL CERAMAR BY WR MEADOWS OR AN APPROVED EQUAL. CAULK & SEAL THE JOINT FOR FULL HEIGHT & LENGTH OF THE WALL EACH SIDE OF THE WALL.
5. REFERENCE BLDG. MFG.'s "APPROVED" SUBMITTAL FOR WALL/ROOF PANEL CONNECTIONS.
6. VERTICAL HOOKS NOT REQUIRED FOR THE TOP BARS OF THE END BARS OF THE THK'D T/D.
7. PREPARE COMPACTED SUBGRADE & INSTALL 6" (MIN.) GRAVEL (OR SAND) LAYER IN CONFORMANCE w/ THE PROJECT GEOTECHNICAL REPORT.
8. INSTALL ENCASEMENTS AROUND PIPES BELOW WELL HOUSE BUILDING SLABS-ON-GRADE. IN ACCORDANCE w/ S0.0 "DESIGN CRITERIA" TABLE, EACH PIPE ENCASEMENT MAY BE CONSTRUCTED w/ 3,000 PSI 28-DAY COMPRESSIVE STRENGTH CONCRETE. REFERENCE CIVIL & MECHANICAL DRAWINGS FOR LOCATIONS & LENGTHS TO EXTEND ENCASEMENTS BEYOND LIMITS OF THE BUILDING.
9. REFERENCE DWG. S0.0 FOR ADDITIONAL GENERAL NOTES, MATERIAL SPECIFICATIONS & REQUIREMENTS, DESIGN CRITERIA AND LEGEND.

REV.NO.	DESCRIPTION	DATE
B	ISSUED FOR BID - NOT FOR CONSTRUCTION	07 APR 2020
A	FINAL DESIGN - NOT FOR CONSTRUCTION	02 MAR 2020

REVISIONS

NORTH CAROLINA PROFESSIONAL SEAL 24995 ENGINEER WILLIAM F. BAND 04-07-20

McKIM&CREED
Venture IV Building, Suite 500
1730 Varsity Drive
Raleigh, North Carolina 27606
Phone: (919) 233-8091, Fax: (919) 233-8031
NC License# F-1222
www.mckimcreed.com

COUNTY OF PENDER

PENDER COUNTY

ROCKY POINT/TOPSAIL WATER AND SEWER DISTRICT

HAMPSTEAD / SCOTT'S HILL WELL PROJECT

STRUCTURAL

WELL HOUSE SECTIONS & DETAILS

PROJ. START DATE:	2019.12
MCE PROJ. #	00542-0079
DRAWN	WFB
DESIGNED	WFB
CHECKED	WFB
PROJ. MGR.	AWB

SCALE
HORIZONTAL: AS NOTED
VERTICAL: NA

S1.1
DRAWING NUMBER
B
REVISION

STATUS: ISSUED FOR BID NOT FOR CONSTRUCTION

I:\00542\0079\WATER\80-DRAWINGS\STRUCTURAL\S11-SD401-05420079.DWG 04/07/2020 13:54:20 BILL BAND

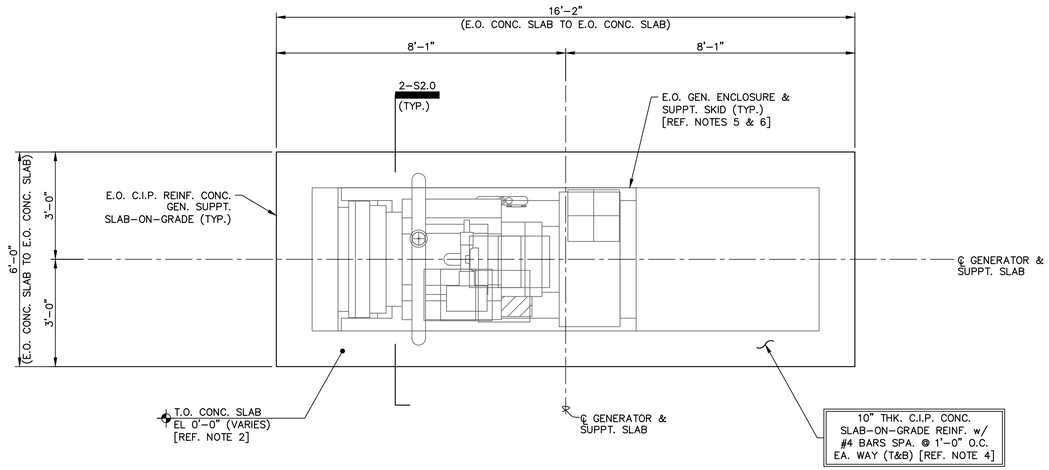

NORTH (PLAN) [REF. NOTE 1]

1 - PLAN - TYP. GENERATOR FOUNDATION SUPPT. SLAB-ON-GRADE

SCALE: 1/2" = 1'-0"

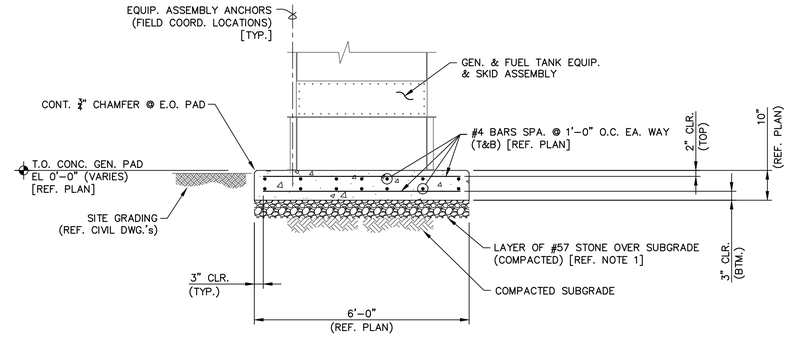

2 - SECTION - THRU GENERATOR SUPPT. SLAB-ON-GRADE

SCALE: 1/2" = 1'-0"

FOUNDATION PLAN NOTES:

1. TRUE NORTH VARIES PER WELL HOUSE SITE. COORDINATE w/ CIVIL DWG.'s AS REQUIRED FOR THE GENERATOR FOUNDATION SUPPORT SLAB ORIENTATION IN REGARDS TO THE DIRECTION OF TRUE NORTH.
2. REFERENCE ELEVATION FOR THE GENERATOR FACILITIES IS THE GENERATOR's SLAB-ON-GRADE T.O. CONC. ELEVATION. THE EQUIVALENT N.A.V.D.-88 ELEVATION WILL VARY PER SITE. REFERENCE CIVIL DWG.'s FOR ADDITIONAL INFORMATION. FOR THE VARIOUS WELL HOUSE BUILDING FACILITIES NOTE THE FOLLOWING:
   a.) KIWANIS SITE "WELL No. 4" GENERATOR: T.O. CONC. EL 0'-0" = EL 29'-7" (29.58').
   b.) ANNEX SITE "WELL No. 6" GENERATOR: T.O. CONC. EL 0'-0" = EL 54'-11¾" (54.98').
3. GRADE ELEVATIONS AROUND THESE STRUCTURES VARIES. REFERENCE CIVIL DRAWINGS FOR ADDITIONAL INFORMATION. FOR THE GRADE ELEVATIONS AT THE VARIOUS GENERATOR FACILITIES NOTE THE FOLLOWING:
   a.) KIWANIS SITE "WELL No. 4": GRADE EL VARIES 29.50' (±).
   b.) ANNEX SITE "WELL No. 6": GRADE EL VARIES 54.90' (±).
4. PREPARE SUBGRADES FOR THESE FACILITY's PER THE RECOMMENDATIONS OF THE PROJECT GEOTECHNICAL REPORT. IN GENERAL FOUNDATION ASSEMBLIES ARE SHALLOW FOUNDATIONS REQUIRING CUT/FILL OF SUBGRADE SOILS. REFERENCE STRUCTURAL GENERAL NOTES 3.1 THRU 3.11 ON DWG. S0.0 FOR ADDITIONAL REQUIREMENTS & INFORMATION.
5. APPROXIMATE OUTLINE OF 80 kW OR 100 kW GENERATOR. GENERATOR SIZE IS DEPENDANT UPON THE WELL HOUSE SITE. COORDINATE w/ ELECTRICAL DWG.'s AS REQUIRED. IN GENERAL THE GENERATOR ENCLOSURE IS SHORTER IN LENGTH THAN THE FUEL SKID ANCHORED TO THE SUPPORT SLAB.
6. EQUIPMENT LAYOUTS ARE SHOWN FOR GENERAL INFO ONLY. REFERENCE ELECTRICAL & EQUIPMENT VENDOR DRAWINGS AS REQUIRED, FOR MISC. EQUIPMENT LAYOUTS, DIMENSIONS & ELEVATIONS.
7. CONTRACTOR TO NOTE NOT ALL UTILITY PIPING/CONDUIT MAY BE SHOWN. CONTRACTOR IS RESPONSIBLE FOR COORDINATING w/ ELECTRICAL & OTHER DISCIPLINE DWG.'s, IN ADDITION TO CONDUCTING OWN AS-BUILT INVENTORY OF EXISTING CONSTRUCTION IN PLACE AS REQUIRED, FOR COORDINATION OF THIS INFO & MISCELLANEOUS EQUIPMENT EITHER SHOWN OR NOT SHOWN THIS PLAN.
8. REFERENCE CIVIL, ELECTRICAL & EQUIPMENT VENDOR DRAWINGS FOR LOCATIONS & INFO REGARDING SLAB PENETRATIONS & CONDUIT ROUTING REQUIREMENTS EITHER SHOWN OR NOT SHOWN.
9. THE GENERATOR SLAB-ON-GRADE DIMENSIONS ARE BASED UPON EQUIPMENT DIMENSIONS PROVIDED BY THE GENERATOR EQUIPMENT VENDOR. SLAB DIMENSIONS PROVIDED THIS DWG. MAY INCREASE/DECREASE DEPENDING UPON THE FINAL EQUIPMENT MFG.'s VENDOR CONSTRUCTION & INSTALLATION DWG.'s FOR THE GENERATOR & FUEL TANK ASSEMBLIES.
10. CONSTRUCT THE GENERATOR SUPPORT SLABS-ON-GRADE w/ THE TOP SURFACES LEVEL AND w/IN THE THE GENERATOR MFG.'s ALLOWED TOLERANCES. IN ADDITION PROVIDE GROUT PADS BELOW THE GENERATOR SKID & ANCHORAGE ASSEMBLIES IF REQUIRED BY THE GENERATOR MANUFACTURER.
11. REFERENCE THE GENERATOR MFG. DRAWINGS FOR COORDINATION & INSTALLATION OF ANCHORING THE SUPPORT SKID TO THE SLAB-ON-GRADE.
12. REFERENCE DWG. S0.0 FOR ADDITIONAL GENERAL NOTES, MATERIAL SPECIFICATIONS & REQUIREMENTS, DESIGN CRITERIA AND LEGEND.

REV.NO.	DESCRIPTION	DATE
B	ISSUED FOR BID - NOT FOR CONSTRUCTION	07 APR 2020
A	FINAL DESIGN - NOT FOR CONSTRUCTION	02 MAR 2020

REVISIONS

NORTH CAROLINA PROFESSIONAL SEAL 24995 ENGINEER WILLIAM F. BAND 04-07-20

McKIM&CREED
Venture IV Building, Suite 500
1730 Varsity Drive
Raleigh, North Carolina 27606
Phone: (919) 233-8091, Fax: (919) 233-8031
NC License# F-1222
www.mckimcreed.com

PENDER COUNTY

ROCKY POINT/TOPSAIL WATER AND SEWER DISTRICT

HAMPSTEAD / SCOTT'S HILL WELL PROJECT

STRUCTURAL

GENERATOR FOUNDATION PLAN, SECTIONS & DETAILS

PROJ. START DATE:	2019.12
MCE PROJ. #	00542-0079
DRAWN	WFB
DESIGNED	WFB
CHECKED	WFB
PROJ. MGR.	AWB

SCALE
HORIZONTAL: AS NOTED
VERTICAL: NA

S2.0
DRAWING NUMBER

B
REVISION

STATUS: ISSUED FOR BID NOT FOR CONSTRUCTION

I:\00542\0079\WATER\80-DRAWINGS\STRUCTURAL\S20-SC102-05420079.DWG 04/07/2020 13:18:46 BILL BAND

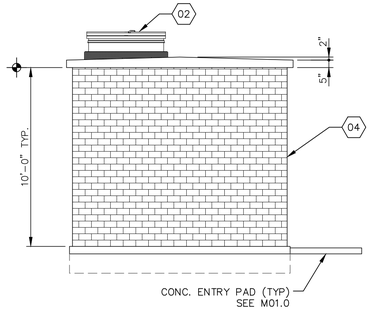

1 - ELEVATION
1/4"=1'-0"

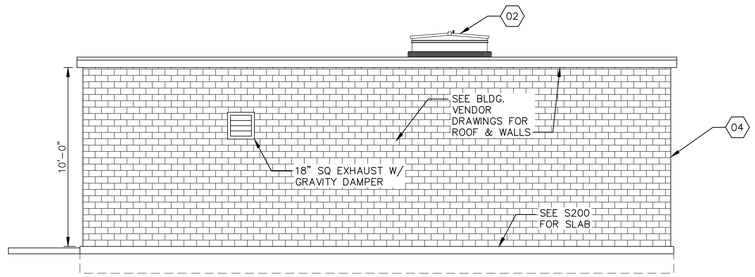

2 - ELEVATION
1/4"=1'-0"

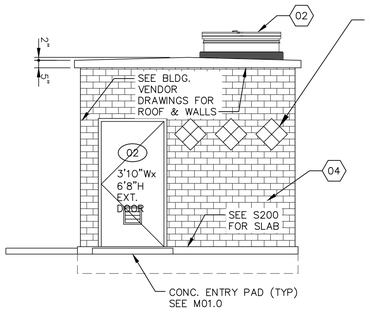

3 - ELEVATION
1/4"=1'-0"

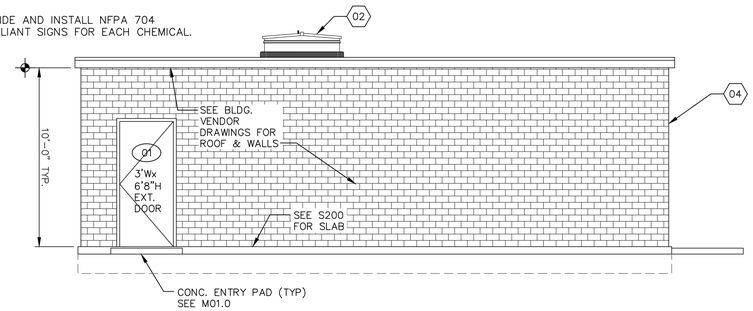

4 - ELEVATION
1/4"=1'-0"

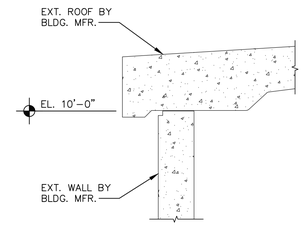

1 - WALL SECTION
1 1/2"=1'-0"

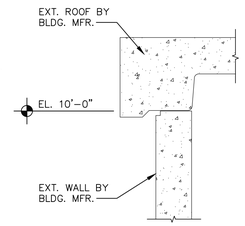

2 - WALL SECTION
1 1/2"=1'-0"

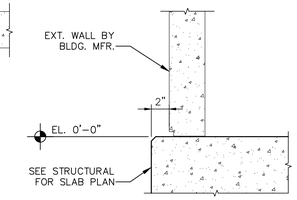

3 - WALL SECTION
1 1/2"=1'-0"

WALL SECTIONS
1 1/2"=1'-0"

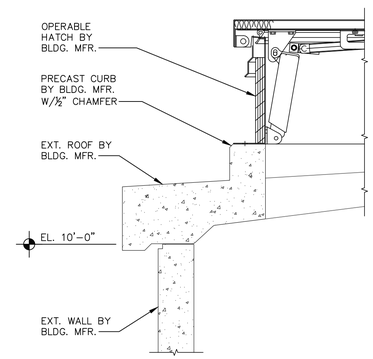

4 - ACCESS HATCH SECTION
1 1/2"=1'-0"

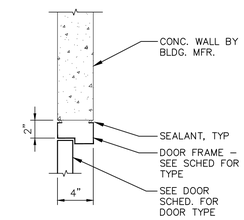

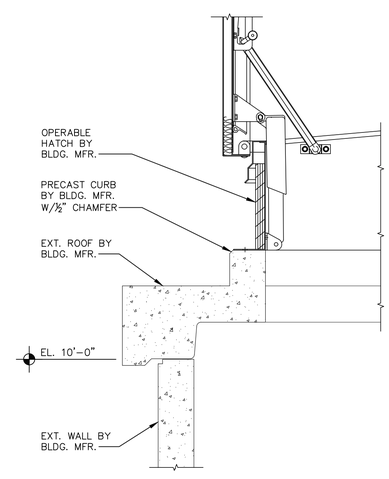

5 - ACCESS HATCH SECTION
1 1/2"=1'-0"

ACCESS HATCH DETAILS
1 1/2"=1'-0"

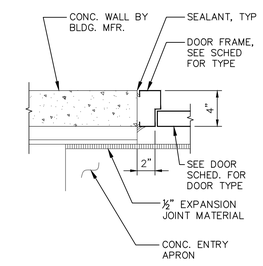

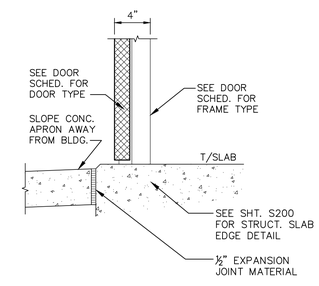

HEAD, JAMB, & SILL DETAILS
1 1/2"=1'-0"

GENERAL NOTES:

- PRECAST BUILDINGS AND DETAILS: (SHOWN FOR SCHEMATIC LAYOUT) BUILDING MFR. TO PROVIDE NC ENGINEER SEALED DETAILED SHOP DRAWINGS.
- ALL EXTERIOR WALLS, ROOF, DOORS, (WINDOW, LOUVER, & MISCELLANEOUS OPENINGS ONLY) BY BUILDING MFR.
- ALL INTERIOR WALLS, DOORS, FLOORS, CEILINGS, MILLWORK, ELECTRICAL, PLUMBING, MECH, HVAC, I&C, & STRUCTURAL WORK SHALL BE COORDINATED BY GENERAL CONTRACTOR.
- ALL EXTERIOR DOORS, WINDOWS, LOUVERS, & MISCELLANEOUS PENETRATIONS INSTALLED BY GENERAL CONTRACTOR. COORDINATE ALL PENETRATIONS WITH BUILDING MFR. ENGINEER, PRIOR TO WORK.

SYMBOL KEY:

(##)	WINDOW KEY, SEE WINDOW SCHEDULE
(##)	DOOR KEY, SEE DOOR & FRAME SCHEDULE
(#)	LAB FURNITURE & EQUIPMENT
W1	WALL TYPE, SEE WALL TYPES
ROOM NAME ###	ROOM NAME & NUMBER, SEE ROOM FINISH SCHEDULE
(##)	NOTE KEY
1.B###	ELEVATION KEY
2.B###	SECTION KEY
3.B###	DETAIL KEY
	ELEVATION
	2 HOUR RATED WALL ASSEMBLY (GWB CONSTRUCTION)

WALL TYPES :

W1	EXTERIOR PRECAST CONCRETE WALL PANELS BY BUILDING MANUFACTURER

KEY NOTES:

01 ELECTRICAL / SCADA EQUIPMENT, SEE E200 / I200

02 48"x48" CLR. SQ. PUMP REMOVAL ACCESS, HATCH AND ROOF CURB BY PRECAST BUILDING VENDOR.

03 DUCTLESS HEAT PUMP SYSTEM, SEE ELEC.

04 **EXTERIOR FINISH:**
A. ANNEX WELL SITE: PROVIDE EASI-BRICK PATTERN*
B. KIWANIS WELL SITE: PROVIDE SPLIT ROCK FACE BLOCK PATTERN*

***EXTERIORS SHALL BE STAINED WITH COLORS SELECTED BY OWNER FROM MFR'S STANDARD COLOR CHART.**

ROOM FINISH SCHEDULE

ROOM # & NAME	FLOOR	WALLS				CEILING		NOTES
		N	S	E	W	MATL.	HEIGHT	
200 WELL HOUSE BUILDING	SC	EXCF	EXCF	EXCF	EXCF	EXCF	10'-0"	--
--	--	--	--	--	--	--	--	--

FINISHES: ===> SC = SEALED CONCRETE, EXCF = EXPOSED CONCRETE FINISH, PCF = PAINTED CONCRETE FINISH

DOOR AND FRAME SCHEDULE

MARK	DOOR							FRAME				FIRE RATING LABEL	HARDWARE		NOTES
	SIZE			MATL	GLAZING	LOUVER		MATL	DETAIL						
	WD	HGT	THK			WD	HGT		HEAD	JAMB	SILL		SET NO	KEYSIDE RM NO	
01	3'-0"	6'-8"	1 3/4"	NOTE (2)	NA	NA	NA	NOTE (2)	H-1	J-1	S-1	NOTE (2)	NOTE (2)	EXTERIOR	NOTE (1, 2)
02	3'-10"	6'-8"	1 3/4"	NOTE (2)	NA	NA	NA	NOTE (2)	H-1	J-1	S-1	NOTE (2)	NOTE (2)	EXTERIOR	NOTE (1, 2, 3)

LEGEND: STL = STEEL, NA = NOT APPLICABLE

NOTES: (1) SEE THIS SHEET (2) SEE SPEC SECTION 13450 FOR DOOR AND HARDWARE (3) PROVIDE 12" SQ ADJUSTABLE "Z" BLADE LOUVER W/ BUG SCREEN. LOUVRE BY ACTIVAR OR EQUAL.

REV.NO.	DESCRIPTION	DATE
C	ISSUED FOR BID - NOT FOR CONSTRUCTION	2020.04
B	FINAL DESIGN - NOT FOR CONSTRUCTION	2020.03
A	PRELIMINARY DESIGN - NOT FOR CONSTRUCTION	2019.12

REVISIONS

NORTH CAROLINA PROFESSIONAL SEAL 025512 ENGINEER ANTHONY W. BOAHEN 4-7-20

McKIM&CREED
Venture IV Building, Suite 500
1730 Varsity Drive
Raleigh, North Carolina 27606
Phone: (919) 233-8091, Fax: (919) 233-8031
NC License# F-1222
www.mckimcreed.com

COUNTY OF PENDER

PENDER COUNTY

ROCKY POINT/TOPSAIL WATER AND SEWER DISTRICT

HAMPSTEAD / SCOTT'S HILL WELL PROJECT

BUILDING

TYPICAL PRECAST BUILDING ELEVATIONS AND DETAILS

PROJ. START DATE:	2019.12
MCE PROJ. #	00542-0079
DRAWN	MTN
DESIGNED	STM
CHECKED	SJK
PROJ. MGR.	SJK

SCALE
HORIZONTAL: AS NOTED
VERTICAL: N/A

B01.0
DRAWING NUMBER
C
REVISION

STATUS: ISSUED FOR BID
NOT FOR CONSTRUCTION

I:\00542\0079\WATER\80-DRAWINGS\BUILDINGS\B01.0-005420079.DWG 04/21/2020 08:26:51 MORGAN NORVILLE

1 ABBREVIATIONS

NOTE: ALL ABBREVIATIONS MAY NOT BE UTILIZED FOR THIS PROJECT

A, AMP	AMPERE
AFD	ADJUSTABLE FREQUENCY DRIVE
AFG	ABOVE FINISHED GRADE
AIT	ANALYTICAL INDICATION TRANSMITTER
AHU	AIR HANDLING UNIT
AIC	AMPERE INTERRUPTING CAPACITY
AL	ALUMINUM
ARMS	ARC-FLASH REDUCTION SYSTEM
ATS	AUTOMATIC TRANSFER SWITCH
AQD	ARC QUENCHING DEVICE
BKR	BREAKER
C	CONDUIT
CAB	CABINET
CB	CIRCUIT BREAKER
CCTV	CLOSED CIRCUIT TELEVISION
CKT	CIRCUIT
CLG	CEILING
CP	CONTROL PANEL
CR	CONTROL RELAY, CORROSION RESISTANT
CS	CONTROL SWITCH
CV	CONTROL VALVE
CT	CURRENT TRANSFORMER
CU	COPPER
DETD	DUAL ELEMENT TIME DELAY
EF	EXHAUST FAN
ELTU	ELECTRONIC TRIP UNIT
EMER	EMERGENCY
EMT	ELECTRICAL METALLIC TUBING
ENCL	ENCLOSURE
EQUIP	EQUIPMENT
EWC	ELECTRIC WATER COOLER
EWH	ELECTRIC WATER HEATER
EPRF	EXPLOSION PROOF
FA	FIRE ALARM
FAAP	FIRE ALARM ANNUNCIATOR PANEL
FACP	FIRE ALARM CONTROL PANEL
FLA	FULL LOAD AMPS
FVNR	FULL VOLTAGE NON-REVERSING STARTER
FLOUR	FLUORESCENT
FMC	FLEXIBLE METALLIC CONDUIT
FWE	FURNISHED WITH EQUIPMENT
GEN	GENERATOR
G, GND	GROUND
GFIC	GROUND FAULT CIRCUIT INTERRUPTER
HH	HANDHOLE
HOA	HAND-OFF-AUTO
HP	HORSE POWER
HPF	HIGH POWER FACTOR
HPS	HIGH PRESSURE SODIUM
HV	HIGH VOLTAGE
IMC	INTERMEDIATE METALLIC CONDUIT (GALVANIZED)
JB	JUNCTION BOX
k	THOUSAND
kCMIL	THOUSAND CIRCULAR MILLS
kA	KILOVOLT AMPERE
kW	KILOWATTS
kWH	KILOWATT-HOURS
LED	LIGHT-EMITTING DIODE
LFMC	LIQUIDTIGHT FLEXIBLE METAL CONDUIT
LFNC	LIQUIDTIGHT FLEXIBLE NONMETALLIC CONDUIT
LIT	LEVEL INDICATION TRANSMITTER
LP	LIGHTING PANEL, LIGHT POLE
MCB	MAIN CIRCUIT BREAKER
MCC	MOTOR CONTROL CENTER
MCP	MOTOR CIRCUIT PROTECTOR
MDP	MAIN DISTRIBUTION PANEL
MFR	MANUFACTURER
MH	MANHOLE
MLO	MAIN LUGS ONLY
MSB	MAIN SWITCHBOARD
MTD	MOUNTED/MOUNTING
MTS	MANUAL TRANSFER SWITCH
MV	MEDIUM VOLTAGE
NEC	NATIONAL ELECTRIC CODE
N, NEU	NEUTRAL
NA	NOT APPLICABLE
NC	NORMALLY CLOSE
NO	NORMALLY OPEN
NIC	NOT IN CONTRACT
NTS	NOT TO SCALE
P	POLE
PA	PUBLIC ADDRESS
PB	PULL BOX, PUSH-BUTTON
PCP	PUMP CONTROL PANEL
PF	POWER FACTOR
ϕ, PH	PHASE
PIT	PRESSURE INDICATION TRANSMITTER
PLC	PROGRAMMABLE LOGIC CONTROLLER
PNL	PANEL
PP	POWER PANEL, POWER POLE
PT	POTENTIAL TRANSFORMER
R/S	RUN/STOP HAND SWITCH
RVSS	REDUCED VOLTAGE SOFT STARTER
REQ	REQUIRED
RMC	RIGIDREMOTE TELEMETRY UNIT
SCCR	SHORT CIRCUIT CURRENT RATING
SCADA	SUPERVISORY CONTROL AND DATA ACQUISITION
SPEC	SPECIFICATION
SS	SELECTOR SWITCH
SST	STAINLESS STEEL
SW	SWITCH
SWBD	SWITCHBOARD
SWGR	SWITCH GEAR
TEL	TELEPHONE
TMTU	THERMAL-MAGNETIC TRIP UNIT
TYP	TYPICAL
UG	UNDERGROUND
UH	UNIT HEATER
V	VOLTS
VFD	VARIABLE FREQUENCY DRIVE
WH	WATT-HOUR
WP	WEATHERPROOF
XFMR	TRANSFORMER

2 TYPICAL DEVICE SYMBOLS

LIGHTING CONTROL SWITCHES:
UPPER-LEFT CHARACTER "a" DENOTES SWITCH DESIGNATION. LOWER-RIGHT CHARACTER "4" DENOTES SWITCH CONTROL
3 – THREE-WAY SWITCH CONTROL
4 – FOUR-WAY SWITCH CONTROL
D – DIMMER CONTROL
OS – OCCUPANCY SENSOR
M – MOTOR RATED SWITCH

LP-1 5-20R — SIMPLEX RECEPTACLE

HEAT-TRACE OR SPECIAL PURPOSE RECEPTACLE REFERENCE DRAWINGS FOR ADDITIONAL DETAILS

DUPLEX RECEPTACLE

QUADRAPLEX RECEPTACLE

VOICE/DATA COMBINATION OUTLETS:

WIRING DEVICE NOTES: IF SHOWN, UPPER-LEFT CHARACTERS DENOTE PANEL BOARD CIRCUIT FOR POWER OUTLETS. IF SHOWN, LOWER-RIGHT CHARACTERS DENOTE NEMA PLUG AND/OR RECEPTACLE CONFIGURATION.

PM — POWER MONITOR

A — AMMETER

AS — AMMETER SWITCH

V — VOLTMETER

VS — VOLTMETER SWITCH

FS — FLOAT/FLOW SWITCH

LS — LIMIT SWITCH

PS — PRESSURE SWITCH

T — THERMOSTAT

JB — JUNCTION BOX, SIZE PER NEC

E — ELECTRICAL EQUIPMENT CONNECTION

PULL OR JUNCTION BOX SIZE PER NEC REQUIREMENTS

DISCONNECT SWITCH

CLASS 1/DIVISION I/II CONDUIT SEAL-OFF FITTING

CONTROL STATION

STOP-START STATION

LOCK-OUT-STOP SWITCH
- □ LOCATED AT FIELD DEVICE
- △ LOCATED AT MAIN CONTROL PANEL
- ◐ LOCATED AT LOCAL CONTROL PANEL
- ○ MOUNTED ON DOOR

INDUSTRIAL BATTERY SET W/MOUNTING RACK

3 TYPICAL DEVICE MOUNTING HEIGHTS

RECEPTACLES (INTERIOR PROCESS AREAS)	16" AFF
RECEPTACLES (EXTERIOR PROCESS AREAS)	48" AFF
LIGHT SWITCHES	48" AFF
PHONE OUTLETS	16" AFF
PHONE OUTLETS (WALL MOUNT)	64" AFF
DATA OUTLETS	16" AFF
EXIT LIGHTS (WALL MOUNT)	16" ABOVE DOOR
EMERGENCY LIGHTS (WALL MOUNT)	96" AFF

NOTES:
DIMENSIONS ARE TO DEVICE BOTTOM UNLESS NOTED OTHERWISE. IN CONCRETE BLOCK OR BRICK WALL CONSTRUCTION, CONTRACTOR SHALL COORDINATE DEVICE BOX INSTALLATION WITH MORTAR AND CONSTRUCTION JOINTS.

4 GENERAL ELECTRICAL SYMBOLS

CONTACT – NORMALLY CLOSED

CONTACT – NORMALLY OPEN

THREE POSITION SELECTOR SWITCH

PUSHBUTTON, N.O., MOMENTARY CONTACT

PUSHBUTTON, N.C., MOMENTARY CONTACT

CONTROL POWER TRANSFORMER

CURRENT TRANSFORMER

LIMIT SWITCH

TEMPERATURE SWITCH

FLOAT SWITCH

PRESSURE SWITCH

FLOW SWITCH

PILOT LIGHT – LETTER INDICATES COLOR R-RED, G-GREEN, W-WHITE, A-AMBER, ETC.

MOTOR OVERLOAD RELAY HEATERS

SOLENOID

MOTOR SPACE HEATER

CONTROL RELAY

M O/C — MOTOR OPERATED VALVE:
M – MODULATING
O/C – OPEN/CLOSE

S — SOLENOID VALVE

LOAD BREAK

700AT 1000AF 3P ELTU GFCI 100% — CIRCUIT BREAKER

FUSE

GROUND ROD

DB110 — RACEWAY SYSTEM CALL-OUTS:
CT – CABLE TRAY
BD – BUS DUCT
DB – DUCTBANK
EC – EXPOSED CONDUIT
WW – WIRE WAY/TROUGH

042000 — RACEWAY AND/OR CABLE ID NUMBER

3% — LINE REACTOR

LP-3 — CONDUIT HOMERUN TO EQUIPMENT SHOWN. LINE TYPE DESIGNATES CONCEALED, EXPOSED, ETC. NUMBERS/TEXT DESIGNATE HOMERUN EQUIPMENT (I.E. PANEL BOARD CIRCUIT NUMBER).

GENERAL CONDUIT RUN CONCEALED IN FURRED WALLS AND CEILINGS, EXPOSED ELSEWHERE UNLESS OTHERWISE NOTED OR SPECIFIED.

CONCEALED CONDUIT IN FLOOR SLAB, UNDERGROUND, ETC.

EXISTING CABLE OR CONDUIT

CONDUIT TURNED DOWN

CONDUIT TURNED UP

E — SITE ELECTRICAL

E — EXISTING SITE ELECTRICAL

T — SITE TELEPHONE

T — EXISTING SITE TELEPHONE

OHE — OVERHEAD ELECTRICAL UTILITY

OHT — OVERHEAD TELEPHONE UTILITY

UGE — UNDERGROUND ELECTRICAL UTILITY

UGT — UNDERGROUND TELEPHONE UTILITY

G — SITE GROUND

G — EXISTING SITE GROUND

NOTES:
ALL SYMBOLS MAY NOT BE UTILIZED FOR THIS PROJECT.
ADDITIONAL SYMBOLS NOT SHOWN ON THIS DRAWING MAY BE SHOWN ELSEWHERE ON THE ELECTRICAL DRAWINGS.

NON-FUSED OR FUSED DISCONNECT SWITCH: TOP NUMBER DENOTES FUSE SIZE (NF=NON-FUSED). BOTTOM NUMBER DENOTES FRAME SIZE. RIGHT NUMBER DENOTES NEMA ENCLOSURE RATING. (0A, 0F, 3R)

ENCLOSED CIRCUIT BREAKER: TOP NUMBER DENOTES TRIP. BOTTOM NUMBER DENOTES FRAME SIZE. RIGHT NUMBER DENOTES NEMA ENCLOSURE RATING. (CB, 0A, 0F, 3R)

00 — COMBINATION MAGNETIC MOTOR STARTER OR MOTOR CIRCUIT PROTECTOR WITH DISCONNECT SWITCH: LEFT NUMBER DENOTES NEMA STARTER SIZE. TOP NUMBER DENOTES FUSE SIZE OR MCP. BOTTOM NUMBER DENOTES FRAME SIZE. RIGHT NUMBER DENOTES NEMA ENCLOSURE. (0A, 0F, 3R)

3 FVNR — FULL VOLTAGE NON-REVERSING MOTOR STARTER. LEFT NUMBER DENOTES NEMA STARTER SIZE.

RVSS — REDUCED VOLTAGE SOLID-STATE MOTOR STARTER.

VFD — VARIABLE FREQUENCY MOTOR CONTROLLER.

52 — ANSI/IEEE TYPE-52 AC POWER CIRCUIT BREAKER

VACUUM STARTER

HP — MOTOR (HP=RATED HORSEPOWER)

M 3~ — AC MOTOR (THREE PHASE)

M 1~ — AC MOTOR (SINGLE PHASE)

M — DC MOTOR

NOTES:
ALL SYMBOLS MAY NOT BE UTILIZED FOR THIS PROJECT.
ADDITIONAL SYMBOLS NOT SHOWN ON THIS DRAWING MAY BE SHOWN ELSEWHERE ON THE ELECTRICAL DRAWINGS. IF REQUIRED, IEC RATINGS WILL INCLUDE THE "IEC" AND "IP" PREFIX.

5 ANSI/IEEE DEVICE NUMBERS

27	UNDER VOLTAGE	59	OVER VOLTAGE
38	BEARING PROTECTION	74	ALARM RELAY
46	PHASE UNBALANCE	81	FREQUENCY
48	INCOMPLETE SEQUENCE	86	LOCK OUT
49	OVER TEMPERATURE	87	DIFFERENTIAL
51	TIMED OVERCURRENT		
51G	TIMED GROUND FAULT		

6 LIGHTING SYMBOLS

A1 a LP-1 — LIGHT FIXTURES (VARIOUS TYPES) – UPPERCASE CHARACTERS "A1" DENOTE FIXTURE TYPE, REFER TO LIGHTING SCHEDULE OR NOTES. NUMBER "LP-1" DENOTE LIGHTING PANEL AND/OR CIRCUIT NUMBER. LOWERCASE LETTER "a" DENOTES CONTROL SWITCH. DUAL SWITCHING INDICATED BY PAIRS OF LOWERCASE LETTERS. "NL" DENOTES NIGHT LIGHT, CIRCUIT AHEAD OF CONTROL SWITCHES.

EGRESS EMERGENCY LIGHT – BATTERY EQUIPPED EMERGENCY LIGHT, CIRCUIT AHEAD OF CONTROL SWITCHES. ADDITIONAL FIXTURE HEADS MAY BE SHOWN CONNECTED TO UNIT. IF SHOWN, UPPERCASE LETTER DENOTES FIXTURE TYPE, REFER TO LIGHTING SCHEDULE OR NOTES. NUMBER DENOTES LIGHTING PANEL CIRCUIT.

7 GENERAL ELECTRICAL NOTES

1. CONTRACTOR RESPONSIBILITIES:
   - 1.1. REFERENCE ALL SPECIFICATIONS, DRAWINGS AND CONTRACT DOCUMENTS FOR ADDITIONAL REQUIREMENTS AND CONTRACT RESPONSIBILITIES PRIOR TO COMMENCING WORK.
   - 1.2. THE GENERAL NOTES STATED ON THIS DRAWING ARE APPLICABLE TO ALL DRAWINGS AND SCOPE OF WORK UNDER THIS CONTRACT UNLESS NOTED OTHERWISE.
   - 1.3. ALL ELECTRICAL WORK SHALL COMPLY WITH THE CURRENT NFPA, NEC, NESC AND LOCAL CODES INCLUDING OWNERS STANDARDS AND REQUIREMENTS.
   - 1.4. CONTRACTOR SHALL COORDINATE WITH THE LOCAL ELECTRICAL UTILITY TO ESTABLISH NEW ELECTRICAL SERVICE(S) AND FINAL CONNECTIONS TO PROVIDE UTILITY POWER AS REQUIRED TO INCLUDE ESTABLISHING TEMPORARY UTILITY ACCOUNT TO PROVIDE ELECTRICAL POWER FOR START-UP AND COMMISSIONING.
   - 1.5. THE ELECTRICAL INSTALLATION SHALL EXCEED THE REQUIREMENTS OF ALL APPLICABLE NECA/NEIS STANDARDS.
   - 1.6. CONTRACTOR SHALL PLAN AND COORDINATE ELECTRICAL CONSTRUCTION WITH ALL CRAFT/TRADE TO ACHIEVE AN EFFICIENT AND EFFECTIVE ELECTRICAL INSTALLATION.
   - 1.7. THE SCHEDULING AND DURATION OF ANY PROCESS OR FACILITY SHUTDOWN TO REMOVE AND/OR INSTALL EQUIPMENT SHALL BE COORDINATED IN ADVANCE WITH FACILITY MANAGEMENT, ENGINEER, OWNER OR OWNER REPRESENTATIVE.
2. ELECTRICAL EQUIPMENT:
   - 2.1. 600V RATED ELECTRICAL EQUIPMENT SHALL HAVE AN AMPERE INTERRUPTING CAPACITY (AIC) RATINGS AS SHOWN ON THE CONTRACT DRAWINGS.
   - 2.2. EQUIPMENT SHALL BE ARRANGED AND INSTALLED TO COMPLY WITH ALL CODE-REQUIRED, MANUFACTURER-RECOMMENDED AND HEAT-DISSIPATION CLEARANCES.
   - 2.3. EQUIPMENT INSTALLATIONS AND PLACEMENTS SHALL COMPLY WITH NEC ARTICLE 110 FOR ALL CLEARANCE REQUIREMENTS.
   - 2.4. EQUIPMENT SHALL FIT INTO THOSE SPACES AS SHOWN ON THE CONTRACT DRAWINGS. CONTRACTOR IS RESPONSIBLE TO PROVIDE EQUIPMENT WHICH MEETS THE SPACE REQUIREMENTS.
   - 2.5. CONTRACTOR SHALL PROVIDE ALL NECESSARY COMPONENTS REQUIRED FOR MAKING FINAL CONNECTIONS FOR ALL EQUIPMENT INSTALLED AND/OR MODIFIED UNDER CONTRACT.
3. POWER AND CONTROL SYSTEM RACEWAYS:
   - 3.1. EXPOSED CONDUIT SHALL BE RIGID ALUMINUM CONDUIT (RAC), GRS, IMC AND EMT ARE NOT ACCEPTABLE.
   - 3.2. CONCEALED CONDUIT EMBEDDED IN CONCRETE SHALL BE SCH-40 PVC
   - 3.4. DIRECT-BURIED CONDUIT SHALL BE DIRECT-BURIED SCH-80 PVC
   - 3.5. TRANSITIONS THROUGH FINISHED GRADE AND/OR CONCRETE SHALL BE PVC-COATED RAC CONDUIT.
   - 3.6. DRAWINGS DEPICT MAJOR DUCTBANK, CABLE-TRAY, BUS-DUCT, WIRE-WAY, TRENCH/FLOOR DUCTS, RACEWAY, CONDUIT, ETC., TO INCLUDE CABLE, CONDUCTOR AND WIRING IN SCHEMATIC AND/OR DIAGRAMMATIC FORMATS. THE CONTRACTOR SHALL REFERENCE ALL EQUIPMENT SPECIFICATIONS AND MANUFACTURER INSTRUCTIONS FOR ADDITIONAL INSTALLATION REQUIREMENTS.
   - 3.7. RACEWAY INSTALLATION AND/OR ARRANGEMENT LAYOUTS ARE NOT TYPICALLY SHOWN ON THE DRAWINGS. CONTRACTOR SHALL DEVELOP LOGICAL GROUPINGS, ROUTING AND MARSHALLING OF DUCTBANK, CABLE-TRAY, BUS-DUCT, WIRE-WAY, TRENCH/FLOOR DUCT, RACEWAY, CONDUIT, ETC., THESE SHALL NOT BE ROUTED THROUGH OR INTERFERE WITH ANY STRUCTURAL ELEMENTS. CONTRACTOR SHALL SUBMIT THESE RACEWAY INSTALLATION AND/OR ARRANGEMENT LAYOUTS PER THE SPECIFICATIONS FOR ENGINEER REVIEW PRIOR TO INSTALLATION.
   - 3.8. RACEWAY ROUTINGS SHALL BE ORGANIZED AND GROUPED IN A PRACTICAL MANNER TO MINIMIZE CROSS-OVERS AND SADDLES. RACEWAY INSTALLATIONS SHALL BE ARRANGED TO ENTER EQUIPMENT FOR DIRECT CONDUCTOR TERMINATIONS.
   - 3.9. RACEWAYS SHALL BE INSTALLED CONCEALED UNLESS OTHERWISE NOTED OR SHOWN. THESE SHALL RUN PARALLEL TO LANDSCAPE AND STRUCTURAL FEATURES WHILE THE BENDS AND TURNS SHALL BE MADE BY MEANS OF LARGE RADII FITTINGS.
   - 3.10. PROVIDE FLEXIBLE RACEWAY CONNECTIONS TO ALL EQUIPMENT SUBJECT TO MOVEMENT AND/OR VIBRATION. CONTRACTOR SHALL MAKE RACEWAY CONNECTIONS COMPLETE AND IN ACCORDANCE WITH THE SPECIFICATIONS.
   - 3.11. CONTRACTOR SHALL PROVIDE ALL REQUIRED PULL BOXES, TERMINAL BOXES AND JUNCTION BOXES FOR INSTALLATION FOR THE WIRING SYSTEMS IN ACCORDANCE WITH THE SPECIFICATIONS THOUGH ALL BOXES MAY NOT BE INDICATED ON THE DRAWINGS.
   - 3.12. SPARE CONDUITS SHALL BE CAPPED OR PLUGGED WITH A PVC FITTING AND INCLUDE 200# TEST POLYPROPYLENE PULL STRING.
4. CABLES/CONDUCTORS/WIRES:
   - 4.1. GENERAL
     - 4.1.1. QUANTITY AND SIZING OF CONDUCTORS, CABLING, WIRING AND RESPECTIVE RACEWAYS DEPICTED ON THE DRAWINGS ARE BASED UPON SELECTED STANDARD ELECTRICAL COMPONENTS OR EQUIPMENT WITH DIRECT ROUTED CONNECTIONS. CONTRACTOR MAY SUBMIT FOR REVIEW BY ENGINEER AND PRIOR TO INSTALLATION, LOGICAL CONDUCTOR AND RACEWAY GROUPINGS IN COMPLIANCE WITH APPLICABLE CODES, STANDARDS AND SPECIFICATIONS WITHOUT ADDITIONAL COST TO OWNER.
     - 4.1.2. CONTRACTOR SHALL PROVIDE A CIRCUIT IDENTIFICATION LABEL AT EACH END OF EACH POWER, BRANCH, CONTROL AND INSTRUMENTATION CIRCUIT CABLE ASSEMBLY, CONDUCTOR OR WIRE.
   - 4.2. POWER/FEEDER
     - 4.2.1. CONTRACTOR SHALL NOT EXCEED CABLE MANUFACTURER SPECIFICATIONS FOR SIDE-WALL AND TENSION LIMITS WHEN DRAWING POWER CABLES INTO RACEWAYS.
     - 4.2.2. CONTRACTOR SHALL DRAW POWER CABLES AND CONDUCTORS WITHIN RACEWAYS UTILIZING POLYWATER LUBRICANT J OR APPROVED EQUAL.
     - 4.2.3. NO SPLICES TO POWER CONDUCTORS AND/OR CABLING SHALL BE MADE WITHOUT ENGINEER APPROVAL. NO JUNCTIONS SHALL BE MADE BELOW GRADE WITHOUT APPROVAL OF ENGINEER.
   - 4.3. POWER/BRANCH
     - 4.3.1. RACEWAY AND WIRING FOR LIGHTING, RECEPTACLES AND BRANCH CIRCUITS ARE NOT TYPICALLY SHOWN ON THE CONTRACT DRAWINGS BUT SHALL BE PROVIDED AS REQUIRED UNDER THIS CONTRACT
5. HARDWARE AND SUPPORTS:
   - 5.1. ALL FASTENERS AND HARDWARE SHALL BE STAINLESS-STEEL 316L.
   - 5.2. STRUT-CHANNEL SHALL NOT BE BENT, DRILLED, CUT OR OTHERWISE MODIFIED TO PRODUCE FITTINGS, BRACES OR BRACKETS FOR CONDUIT AND EQUIPMENT SUPPORTS.
   - 5.3. MANUFACTURED STRUT-CHANNEL BRACES, BRACKETS, FITTINGS OR POST BASES SHALL BE PROVIDED AND INSTALLED WITH ASSOCIATED HARDWARE AND FASTENERS FOR CONDUIT AND EQUIPMENT SUPPORTS.
   - 5.4. CONTRACTOR SHALL PROVIDE ALL SUPPORTS AND FASTENING HARDWARE FOR SWITCHBOARDS, PANELBOARDS, TRANSFORMERS, CONTROL PANELS, ETC., AS REQUIRED IN THE SPECIFICATIONS.
   - 5.5. CONTRACTOR SHALL PROVIDE AND INSTALL CONCRETE EMBEDDED LEVELING CHANNEL SUPPORTS FOR FLOOR MOUNTED EQUIPMENT SPANNING DISTANCES 48" AND GREATER IN LENGTH OR 36" AND GREATER IN DEPTH.
   - 5.6. STRUCTURAL MEMBERS SHALL NOT BE DRILLED, CUT, WELDED TO, OR OTHERWISE MODIFIED WITHOUT PRIOR APPROVAL OF THE ENGINEER OF RECORD.
6. RECEPTACLES/SWITCHES:
   - 6.1. GENERAL
     - 6.2.0.2. INDOORS OR NON PROCESS AREAS SHALL BE INSTALLED CONCEALED AND FLUSH WITH STAINLESS-STEEL DEVICE COVER PLATES.
     - 6.2.0.3. OUTDOORS OR IN PROCESS AREAS SHALL BE INSTALLED WITHIN WEATHER-PROOF, CORROSION RESISTANT DEVICE BOXES WITH METALLIC IN-USE AND/OR WATER-TIGHT DEVICE COVER PLATES.
   - 6.3. RECEPTACLES/GROUND FAULT CURRENT INTERRUPTING (GFCI)
     - 6.3.1. SHALL BE INDIVIDUAL GFCI RECEPTACLE DEVICES RATED FOR 20A/120V WITH LED POWER INDICATOR.
     - 6.3.2. GFCI RECEPTACLE DEVICES SHALL NOT SHARE NEUTRAL CONDUCTORS ON THREE-PHASE SYSTEMS

REV.NO.	DESCRIPTION	DATE
C	ISSUED FOR BID - NOT FOR CONSTRUCTION	07 APR 2020
B	FINAL DESIGN - NOT FOR CONSTRUCTION	06 MAR 2020
A	PRELIMINARY DESIGN - NOT FOR CONSTRUCTION	10 JAN 2020

REVISIONS

NORTH CAROLINA PROFESSIONAL SEAL 041530 ENGINEER JASON A GILLENTINE — 7 APR 2020

McKIM&CREED
Venture IV Building, Suite 500
1730 Varsity Drive
Raleigh, North Carolina 27606
Phone: (919) 233-8091, Fax: (919) 233-8031
NC License# F-1222
www.mckimcreed.com

PENDER COUNTY

ROCKY POINT/TOPSAIL WATER AND SEWER DISTRICT

HAMPSTEAD / SCOTT'S HILL WELL PROJECT

ELECTRICAL

GENERAL NOTES, SYMBOLS, LEGENDS AND ABBREVIATIONS

PROJ. START DATE:	2019.12
MCE PROJ. #	00542-0079
DRAWN	SN
DESIGNED	SN/JAG
CHECKED	JAG
PROJ. MGR.	SJK

SCALE — HORIZONTAL: N/A — VERTICAL: N/A

E0.0 — DRAWING NUMBER

C — REVISION

STATUS: ISSUED FOR BID NOT FOR CONSTRUCTION

I:\00542\0079\WATER\80-DRAWINGS\ELECTRICAL\EA000_00542-0079.DWG 04/07/2020 12:54:57 JASON GILLENTINE

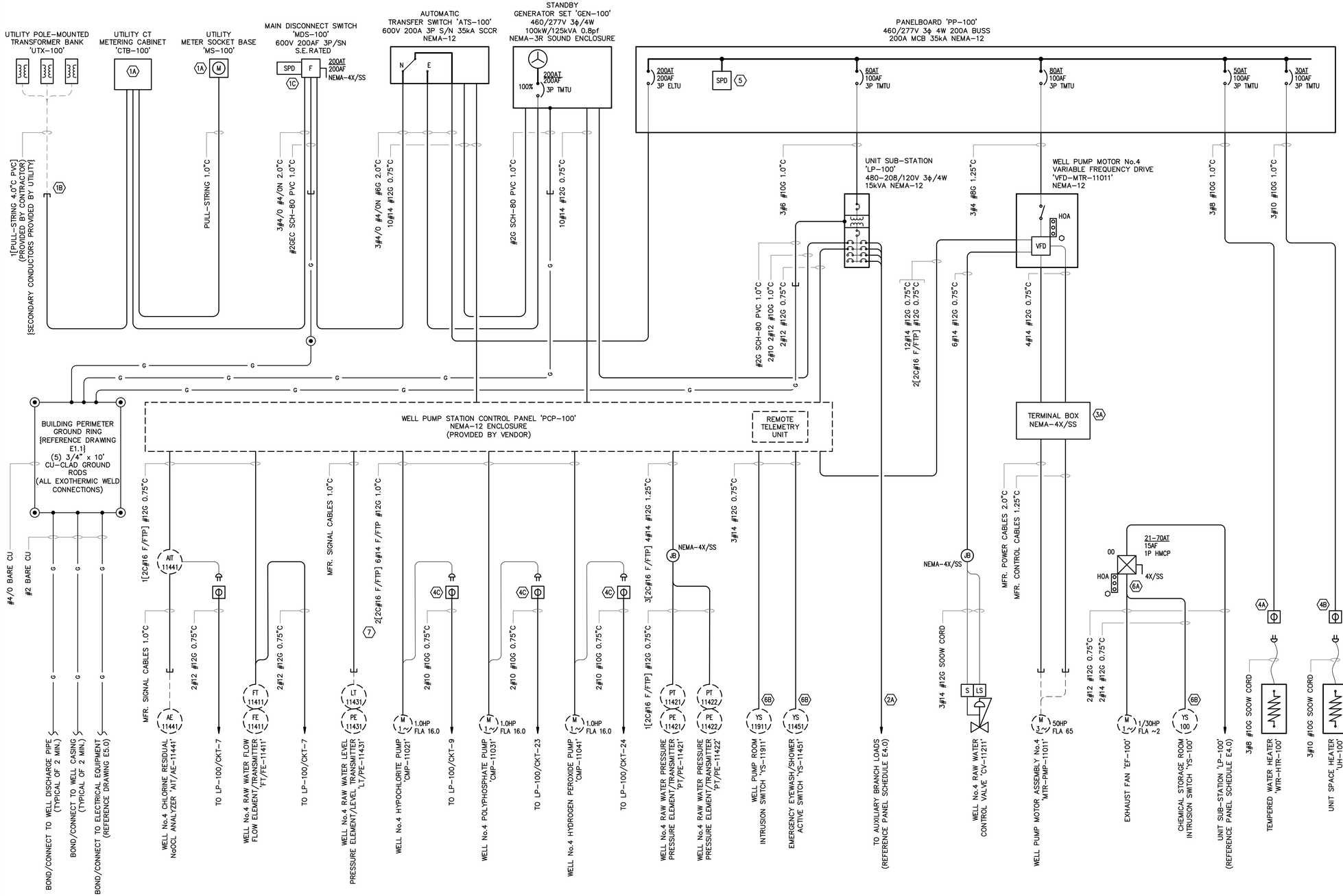

GENERAL NOTES:

1. REFERENCE ALL SPECIFICATIONS AND CONTRACT DRAWINGS FOR ADDITIONAL REQUIREMENTS AND CONTRACT RESPONSIBILITIES PRIOR TO COMMENCING WORK.
2. CONTRACTOR SHALL REFERENCE ALL CONTRACT DRAWINGS PRIOR TO EXCAVATION AND INSTALLATION OF UNDERGROUND RACEWAYS, DUCTBANKS AND GROUNDING/BONDING COMPONENTS.
4. ALL POWER CONDUCTORS SHALL BE STRANDED COPPER 600V XHHW-2 90°C.
5. ALL CONTROL CONDUCTORS SHALL BE STRANDED COPPER 600V THHN/THWN 75°C.
6. ALL UNDERGROUND CONDUIT SHALL BE PVC SCH-80. PVC SCH-40 SHALL BE ACCEPTABLE.
7. CONCEALED CONDUIT EMBEDDED IN CONCRETE SHALL BE SCH-40 PVC
8. TRANSITIONS THROUGH FINISHED GRADE AND CONCRETE SHALL BE PVC-COATED ALUMINUM CONDUIT EXTENDING 12-INCHES ABOVE AND BELOW TRANSITION..
9. ALL EXPOSED CONDUIT SHALL BE RIGID ALUMINUM CONDUIT (RAC).
10. ALL FLEXIBLE CONDUIT SHALL BE LIQUID-TIGHT METALLIC STEEL (LFMC) MADE UP WITH DIE-CAST ALUMINUM METALLIC FITTINGS.
11. ALL CONDUIT SHALL ENTER EXTERIOR ENCLOSURES FROM THE BOTTOM AND FITTED WITH GROUNDING CONDUIT HUBS.
    11.1. NOTE: CONDUIT PENETRATIONS TO THE TOP SIDE OF ENCLOSURES ALLOWED WITH THREADED CONDUIT HUBS ONLY.

KEYNOTES:

(1A) PROVIDE AND INSTALL CT METERING CABINET AND METER SOCKET BASE PER DUKE ENERGY CONSTRUCTION STANDARDS. COORDINATE LOCATION WITH DUKE ENERGY AND OWNER.

(1B) PROVIDE AND INSTALL 4.0"C PVC UNDERGROUND FROM UTILITY POLE TO CT METERING CABINET STUB-UP LOCATION. CONTRACTOR SHALL COORDINATE LOCATION AND BURIAL DEPTH WITH DUKE PRIOR TO INSTALLATION

(1C) PROVIDE AND INSTALL SURGE PROTECTIVE DEVICE PER DUKE ENERGY CONSTRUCTION STANDARDS.

(2A) PROVIDE AND INSTALL RACEWAYS AND CONDUCTORS FOR THOSE MISCELLANEOUS BRANCH CIRCUITRY AS REQUIRED (REFERENCE DRAWINGS E4.0 AND E5.0)

(3A) ENCLOSURE PROVIDED BY VENDOR FOR INSTALLATION BY DIV-26.

(4A) PROVIDE AND INSTALL 480V 3ϕ 50A NEMA H-38 ANGLED TWIST-LOCK RECEPTACLE, PLUG AND SURFACE MOUNTED BOX ASSEMBLY RATED FOR CORROSIVE ENVIRONMENT.

(4B) PROVIDE AND INSTALL 480V 3ϕ 30A NEMA L16-30 TWIST-LOCK RECEPTACLE, PLUG AND SURFACE MOUNTED BOX ASSEMBLY RATED FOR CORROSIVE ENVIRONMENT.

(4C) 125V/20A SINGLE RECEPTACLE FOR CORROSIVE ENVIRONMENT WITH WEATHER-RESISTANT DIE-CAST IN-USE COVER FED FROM CLASS B BREAKER INSIDE PANELBOARD:
FD NON-FERROUS BACK BOX
PASS & SEYMOUR P/N FD22 OR APPROVED EQUAL

(5) INTEGRAL SURGE PROTECTION DEVICE PROVIDED BY PANELBOARD MANUFACTURER

(6A) PROVIDE AND INSTALL NEMA-4X/SS COMBINATION MOTOR STARTER AND ALL ASSOCIATED POWER AND CONTROL CIRCUITRY AS SHOWN. (REFERENCE DRAWING E6.0)

(6B) PROVIDE AND INSTALL HEAVY-DUTY STAINLESS-STEEL LIMIT SWITCH INTRUSION ALARM WITH STAINLESS STEEL LEVER MOUNTED ON CHEMICAL BUILDING DOOR AS SHOWN IN THE CONTRACT DOCUMENTS.
HONEYWELL MICRO SWITCH LS2 SERIES OR APPROVED EQUAL

(7) PROVIDE AND INSTALL SIGNAL CONDUCTOR CABLE WITH INDIVIDUAL AND OVERALL FOIL SCREEN

POWER AND CONTROL RISER SCHEMATIC
SCALE: N.T.S.

REV.NO.	DESCRIPTION	DATE
C	ISSUED FOR BID - NOT FOR CONSTRUCTION	07 APR 2020
B	FINAL DESIGN - NOT FOR CONSTRUCTION	06 MAR 2020
A	PRELIMINARY DESIGN - NOT FOR CONSTRUCTION	10 JAN 2020

REVISIONS

NORTH CAROLINA PROFESSIONAL SEAL 041530 ENGINEER JASON A. GILLENTINE 7 APR. 2020

McKIM&CREED
Venture IV Building, Suite 500
1730 Varsity Drive
Raleigh, North Carolina 27606
Phone: (919) 233-8091, Fax: (919) 233-8031
NC License# F-1222
www.mckimcreed.com

PENDER COUNTY

ROCKY POINT/TOPSAIL WATER AND SEWER DISTRICT

HAMPSTEAD / SCOTT'S HILL WELL PROJECT

ELECTRICAL

KIWANIS - WELL NO.4 POWER AND CONTROL RISER DIAGRAM

PROJ. START DATE:	2019.12
MCE PROJ. #	00542-0079
DRAWN	SN/RCR
DESIGNED	SN/JAG
CHECKED	JAG
PROJ. MGR.	SJK

SCALE
HORIZONTAL: N/A
VERTICAL: N/A

E1.0
DRAWING NUMBER
C
REVISION

STATUS: ISSUED FOR BID NOT FOR CONSTRUCTION

I:\00542\0079\WATER\80-DRAWINGS\ELECTRICAL\ES100_00542-0079.DWG 04/07/2020 12:55:02 JASON GILLENTINE

NORTH

WELL No.4 ELECTRICAL SITE PLAN
SCALE: 1" = 10'

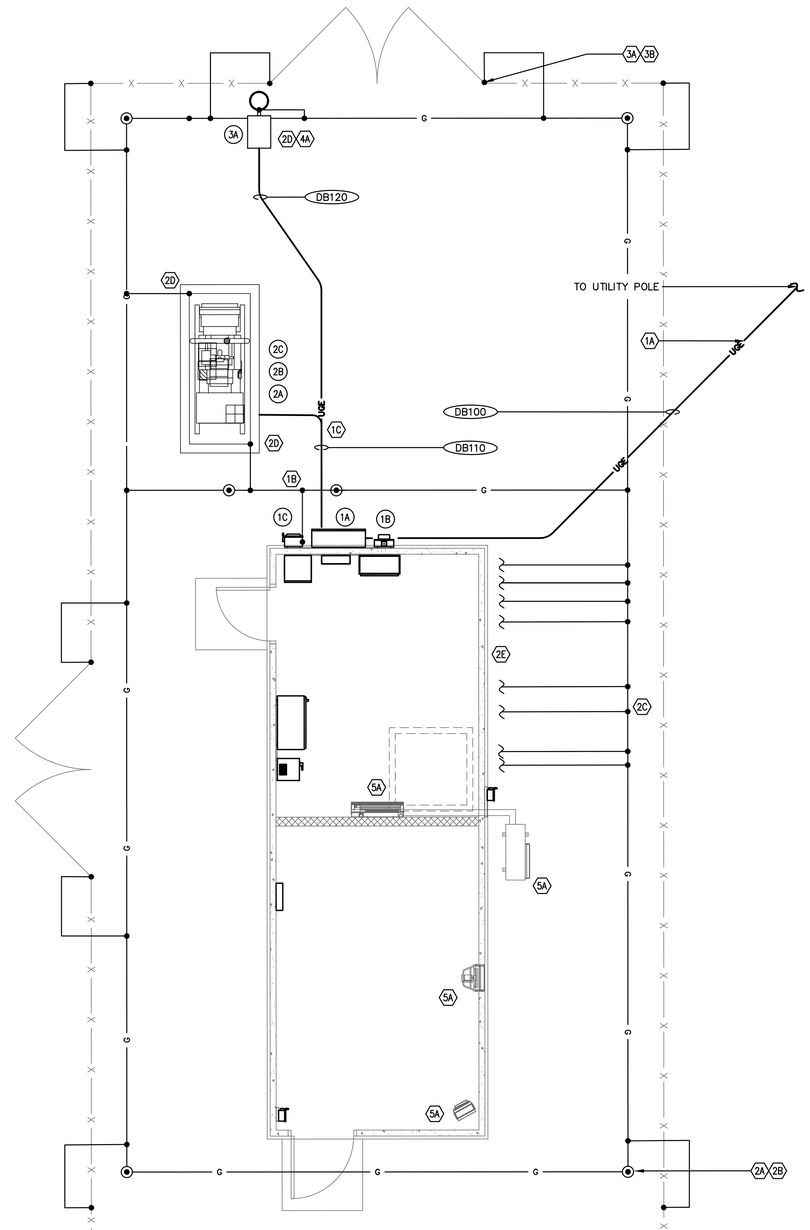

WELL No.4 POWER AND GROUNDING PLAN
SCALE: 1/4" = 1' - 0"

GENERAL NOTES:

1. REFERENCE ALL SPECIFICATIONS AND CONTRACT DRAWINGS FOR ADDITIONAL REQUIREMENTS AND CONTRACT RESPONSIBILITIES PRIOR TO COMMENCING WORK.
2. CONTRACTOR SHALL REFERENCE ALL CONTRACT DRAWINGS PRIOR TO EXCAVATION AND INSTALLATION OF UNDERGROUND RACEWAYS, DUCTBANKS AND GROUNDING/BONDING COMPONENTS.
4. ALL POWER CONDUCTORS SHALL BE STRANDED COPPER 600V XHHW-2 90°C.
5. ALL CONTROL CONDUCTORS SHALL BE STRANDED COPPER 600V THHN/THWN 75°C.
6. ALL UNDERGROUND CONDUIT SHALL BE PVC SCH-80. PVC SCH-40 SHALL BE ACCEPTABLE.
7. CONCEALED CONDUIT EMBEDDED IN CONCRETE SHALL BE SCH-40 PVC
8. TRANSITIONS THROUGH FINISHED GRADE AND CONCRETE SHALL BE PVC-COATED ALUMINUM CONDUIT EXTENDING 12-INCHES ABOVE AND BELOW TRANSITION..
9. ALL EXPOSED CONDUIT SHALL BE RIGID ALUMINUM CONDUIT (RAC).
10. ALL FLEXIBLE CONDUIT SHALL BE LIQUID-TIGHT METALLIC STEEL (LFMC) MADE UP WITH DIE-CAST ALUMINUM METALLIC FITTINGS.
11. ALL CONDUIT SHALL ENTER EXTERIOR ENCLOSURES FROM THE BOTTOM AND FITTED WITH GROUNDING CONDUIT HUBS.

11.1. NOTE: CONDUIT PENETRATIONS TO THE TOP SIDE OF ENCLOSURES ALLOWED WITH THREADED CONDUIT HUBS ONLY.

KEYNOTES:

1A INSTALL 4.0"C PVC SCH-80 CONDUIT UNDERGROUND FROM UTILITY POLE TO NEW CT METERING CABINET. CONTRACTOR SHALL COORDINATE WITH UTILITY PRIOR TO INSTALLATION.

1B ROUTE #2AWG GROUNDING ELECTRODE CONDUCTOR IN PVC SCH-80 0.75"C MECHANICALLY CONNECTED TO NEW MAIN DISCONNECT NEUTRAL

1C INSTALL POWER AND CONTROL CONDUITS FROM 'ATS-100' TO 'GEN-100' AS DESCRIBED BELOW:
a. ALL CONDUITS SHALL BE ROUTED IN DIRECT-BURIED DUCTBANK UNDER SLAB INSIDE WELL HOUSE
b. ALL CONDUITS SHALL BE ROUTED IN CONCRETE-ENCASED NON-REINFORCED DUCTBANK OUTSIDE WELL HOUSE

2A CONTRACTOR SHALL PROVIDE AND INSTALL 3/4" x 120" CU-CLAD GROUND ROD (TYPICAL ALL):
HARGER P/N 3410C OR APPROVED EQUAL

2B EXOTHERMIC WELD 4/0AWG CABLE TO 3/4-INCH GROUND ROD: TYPE-GT OR EQUAL (TYPICAL ALL)

2C EXOTHERMIC WELD 4/0AWG CABLE RUN TO #2AWG CABLE TAP: TYPE-TA OR EQUAL (TYPICAL ALL)

2D BOND ELECTRICAL EQUIPMENT AND/OR FRAMING SUPPORTS WITH BARE #2AWG BARE CU WIRE WITH HIGH-PRESS MECHANICAL LUG CONNECTIONS USING STAINLESS-STEEL ANTI-VIBRATION FASTENERS (TYPICAL ALL)

2E BOND ELECTRICAL EQUIPMENT, WELL CASING, PIPING AND/OR FLANGES LOCATED INSIDE WELL HOUSE No.4 WITH BARE #2AWG BARE CU WIRE WITH HIGH-PRESS MECHANICAL LUG CONNECTIONS USING STAINLESS-STEEL ANTI-VIBRATION FASTENERS (TYPICAL ALL) (REFERENCE DRAWING E5.0 FOR BONDING CONNECTIONS INSIDE WELL HOUSE)

3A PROVIDE AND INSTALL BONDING CONNECTIONS (TYPICAL ALL) FROM FENCE POSTS TO PERIMETER GROUNDING RING WITH UL LISTED FENCE POST CLAMP:
HARGER P/N CPC1.5/2TP OR APPROVED EQUAL

3B PROVIDE AND INSTALL (TYPICAL ALL) FLEXIBLE BONDING CONNECTIONS FROM FENCE POSTS TO FENCE GATES WITH UL LISTED CLAMPS AND FLEXIBLE BRAIDED CONDUCTORS:
HARGER P/N CPC1.5/2TP OR APPROVED EQUAL
HARGER P/N GS1.51252417/8F OR APPROVED EQUAL

4A PROVIDE AND INSTALL NEW LED FULL CUT-OFF LIGHT FIXTURE WITH PHOTOSENSOR CONTROL:
LITHONIA P/N RSX1-LED-P1-30K-R3S-MVOLT-RPA-PE-DDBXD OR EQUAL
LIGHT FIXTURE SHALL BE MOUNTED ON NEW TRANSMISSION GRADE, CLASS 3 OR BETTER WOODEN POLE

5A REFERENCE DRAWING E5.0 FOR HVAC EQUIPMENT INSIDE WELL HOUSE

EQUIPMENT IDENTIFIERS

1A UTILITY CT CABINET 'CTB-100'
1B UTILITY METER SOCKET BASE 'MSB-100'
1C MAIN DISCONNECT SWITCH 'MDS-100'
2A GENERATOR 'GEN-100'
2B GENERATOR BLOCK HEATER
2C GENERATOR BATTERY CHARGER
3A AREA POLE LIGHT
4A SUMP PUMP W/INTEGRAL FLOAT

DUCTBANK CALL-OUTS

DB100 FROM UTILITY POLE TO 'CTB-100':
[PULL-STRING] 4.0"C

DB110 FROM 'GEN-100' TO ATS-100:
10#14 #12G 0.75"C
3#4/0 #4/0N #6G 2.0"C

FROM 'GEN-100' TO 'PCP-100':
10#14 #12G 0.75"C

FROM 'GEN-100' TO 'LP-100':
2#10 2#12 #10G 1.0"C

FROM 'LP-100' TO AREA POLE LIGHT:
2#12 #12G 0.75"C

DB120 FROM 'LP-100' TO AREA POLE LIGHT:
2#12 #12G 0.75"C

REV.NO.	DESCRIPTION	DATE
C	ISSUED FOR BID - NOT FOR CONSTRUCTION	07 APR 2020
B	FINAL DESIGN - NOT FOR CONSTRUCTION	06 MAR 2020
A	PRELIMINARY DESIGN - NOT FOR CONSTRUCTION	10 JAN 2020

REVISIONS

NORTH CAROLINA PROFESSIONAL SEAL 041530 ENGINEER JASON A GILLENTINE
7 APR 2020

McKIM&CREED
Venture IV Building, Suite 500
1730 Varsity Drive
Raleigh, North Carolina 27606
Phone: (919) 233-8091, Fax: (919) 233-8031
NC License# F-1222
www.mckimcreed.com

COUNTY OF PENDER

PENDER COUNTY

ROCKY POINT/TOPSAIL WATER AND SEWER DISTRICT

HAMPSTEAD / SCOTT'S HILL WELL PROJECT

ELECTRICAL

KIWANIS - WELL NO.4 ELECTRICAL SITE PLAN

PROJ. START DATE:	2019.12
MCE PROJ. #	00542-0079
DRAWN	SN/RCR
DESIGNED	SN/JAG
CHECKED	JAG
PROJ. MGR.	SJK

SCALE
HORIZONTAL: AS SHOWN
VERTICAL: N/A

E1.1
DRAWING NUMBER
C
REVISION

STATUS: ISSUED FOR BID
NOT FOR CONSTRUCTION

I:\00542\0079\WATER\80-DRAWINGS\ELECTRICAL\EB300_00542-0079.DWG 04/07/2020 12:55:19 JASON GILLENTINE

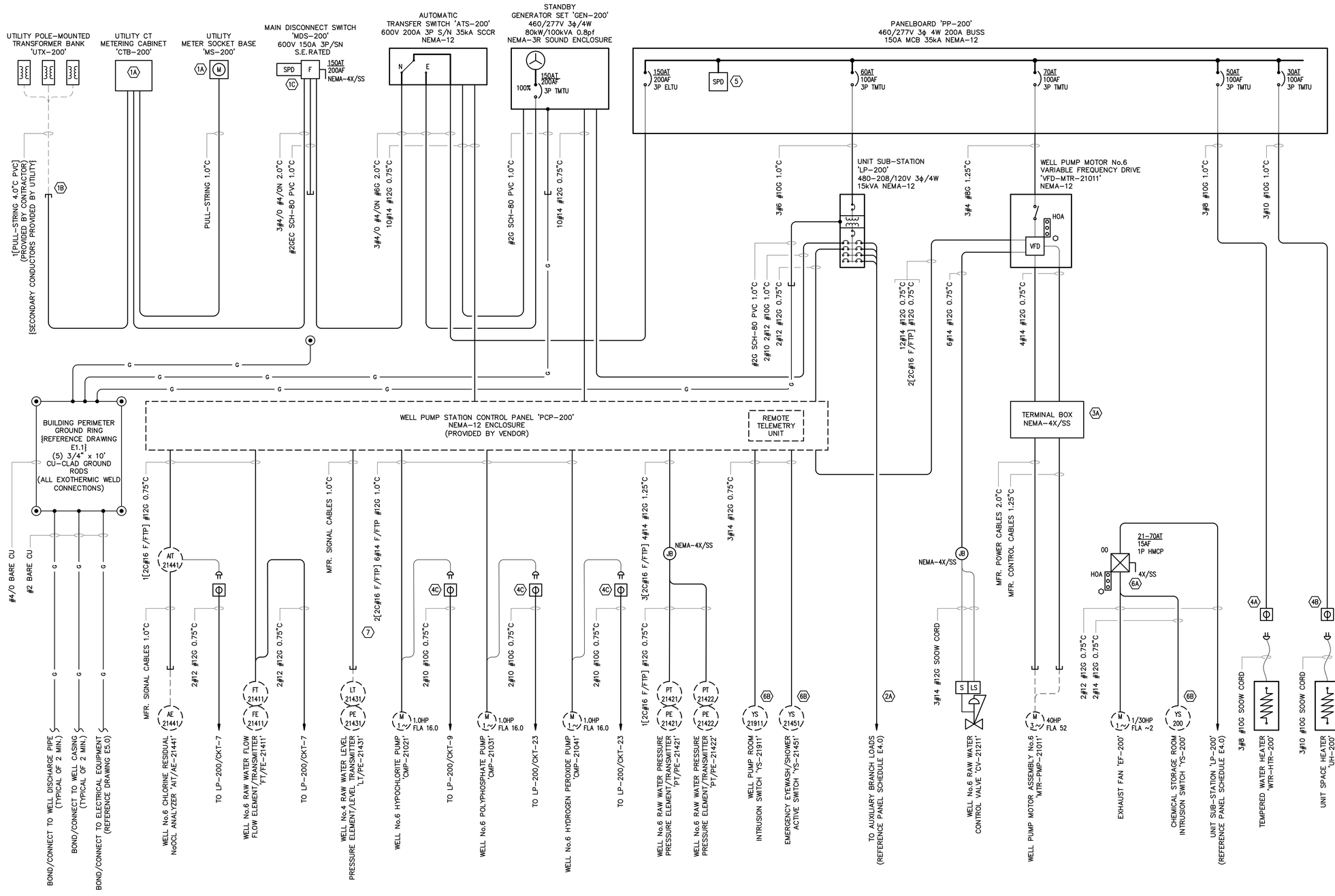

GENERAL NOTES:

1. REFERENCE ALL SPECIFICATIONS AND CONTRACT DRAWINGS FOR ADDITIONAL REQUIREMENTS AND CONTRACT RESPONSIBILITIES PRIOR TO COMMENCING WORK.
2. CONTRACTOR SHALL REFERENCE ALL CONTRACT DRAWINGS PRIOR TO EXCAVATION AND INSTALLATION OF UNDERGROUND RACEWAYS, DUCTBANKS AND GROUNDING/BONDING COMPONENTS.
4. ALL POWER CONDUCTORS SHALL BE STRANDED COPPER 600V XHHW-2 90°C.
5. ALL CONTROL CONDUCTORS SHALL BE STRANDED COPPER 600V THHN/THWN 75°C.
6. ALL UNDERGROUND CONDUIT SHALL BE PVC SCH-80. PVC SCH-40 SHALL BE ACCEPTABLE.
7. CONCEALED CONDUIT EMBEDDED IN CONCRETE SHALL BE SCH-40 PVC
8. TRANSITIONS THROUGH FINISHED GRADE AND CONCRETE SHALL BE PVC-COATED ALUMINUM CONDUIT EXTENDING 12-INCHES ABOVE AND BELOW TRANSITION..
9. ALL EXPOSED CONDUIT SHALL BE RIGID ALUMINUM CONDUIT (RAC).
10. ALL FLEXIBLE CONDUIT SHALL BE LIQUID-TIGHT METALLIC STEEL (LFMC) MADE UP WITH DIE-CAST ALUMINUM METALLIC FITTINGS.
11. ALL CONDUIT SHALL ENTER EXTERIOR ENCLOSURES FROM THE BOTTOM AND FITTED WITH GROUNDING CONDUIT HUBS.
    11.1. NOTE: CONDUIT PENETRATIONS TO THE TOP SIDE OF ENCLOSURES ALLOWED WITH THREADED CONDUIT HUBS ONLY.

KEYNOTES:

1A. PROVIDE AND INSTALL CT METERING CABINET AND METER SOCKET BASE PER DUKE ENERGY CONSTRUCTION STANDARDS. COORDINATE LOCATION WITH DUKE ENERGY AND OWNER.

1B. PROVIDE AND INSTALL 4.0"C PVC UNDERGROUND FROM UTILITY POLE TO CT METERING CABINET STUB-UP LOCATION. CONTRACTOR SHALL COORDINATE LOCATION AND BURIAL DEPTH WITH DUKE PRIOR TO INSTALLATION

1C. PROVIDE AND INSTALL SURGE PROTECTIVE DEVICE PER DUKE ENERGY CONSTRUCTION STANDARDS.

2A. PROVIDE AND INSTALL RACEWAYS AND CONDUCTORS FOR THOSE MISCELLANEOUS BRANCH CIRCUITRY AS REQUIRED (REFERENCE DRAWINGS E4.0 AND E5.0)

3A. ENCLOSURE BOX PROVIDED BY VENDOR FOR INSTALLATION BY DIV-26.

4A. PROVIDE AND INSTALL 480V 3ϕ 50A NEMA H-38 ANGLED TWIST-LOCK RECEPTACLE, PLUG AND SURFACE MOUNTED BOX ASSEMBLY RATED FOR CORROSIVE ENVIRONMENT.

4B. PROVIDE AND INSTALL 480V 3ϕ 30A NEMA L16-30 TWIST-LOCK RECEPTACLE, PLUG AND SURFACE MOUNTED BOX ASSEMBLY RATED FOR CORROSIVE ENVIRONMENT.

4C. 125V/20A SINGLE RECEPTACLE FOR CORROSIVE ENVIRONMENT WITH WEATHER-RESISTANT DIE-CAST IN-USE COVER FED FROM CLASS B BREAKER INSIDE PANELBOARD:
FD NON-FERROUS BACK BOX
PASS & SEYMOUR P/N FD22 OR APPROVED EQUAL

5. INTEGRAL SURGE PROTECTION DEVICE PROVIDED BY PANELBOARD MANUFACTURER

6A. PROVIDE AND INSTALL NEMA-4X/SS COMBINATION MOTOR STARTER 'COM-EF-XXX' AND ALL ASSOCIATED POWER AND CONTROL CIRCUITRY AS SHOWN.
(REFERENCE DRAWING E6.0)

6B. PROVIDE AND INSTALL HEAVY-DUTY STAINLESS-STEEL LIMIT SWITCH INTRUSION ALARM WITH STAINLESS STEEL LEVER MOUNTED ON CHEMICAL BUILDING DOOR AS SHOWN IN THE CONTRACT DOCUMENTS.
HONEYWELL MICRO SWITCH LS2 SERIES OR APPROVED EQUAL

7. PROVIDE AND INSTALL SIGNAL CONDUCTOR CABLE WITH INDIVIDUAL AND OVERALL FOIL SCREEN

POWER AND CONTROL RISER SCHEMATIC

SCALE: N.T.S.

REV.NO.	DESCRIPTION	DATE
C	ISSUED FOR BID - NOT FOR CONSTRUCTION	07 APR 2020
B	FINAL DESIGN - NOT FOR CONSTRUCTION	06 MAR 2020
A	PRELIMINARY DESIGN - NOT FOR CONSTRUCTION	10 JAN 2020

REVISIONS

NORTH CAROLINA PROFESSIONAL SEAL 041530 ENGINEER JASON A GILLENTINE
7 APR 2020

McKIM&CREED
Venture IV Building, Suite 500
1730 Varsity Drive
Raleigh, North Carolina 27606
Phone: (919) 233-8091, Fax: (919) 233-8031
NC License# F-1222
www.mckimcreed.com

PENDER COUNTY

ROCKY POINT/TOPSAIL WATER AND SEWER DISTRICT

HAMPSTEAD / SCOTT'S HILL WELL PROJECT

ELECTRICAL

ANNEX - WELL NO.6 POWER AND CONTROL RISER DIAGRAM

PROJ. START DATE:	2019.12
MCE PROJ. #	00542-0079
DRAWN	SN/RCR
DESIGNED	SN/JAG
CHECKED	JAG
PROJ. MGR.	SJK

SCALE
HORIZONTAL: N/A
VERTICAL: N/A

E3.0
DRAWING NUMBER
C
REVISION

STATUS: ISSUED FOR BID NOT FOR CONSTRUCTION

I:\00542\0079\WATER\80-DRAWINGS\ELECTRICAL\ES100_00542-0079.DWG 04/07/2020 12:55:28 JASON GILLENTINE

WELL No.6 ELECTRICAL SITE PLAN
SCALE: 1" = 20'

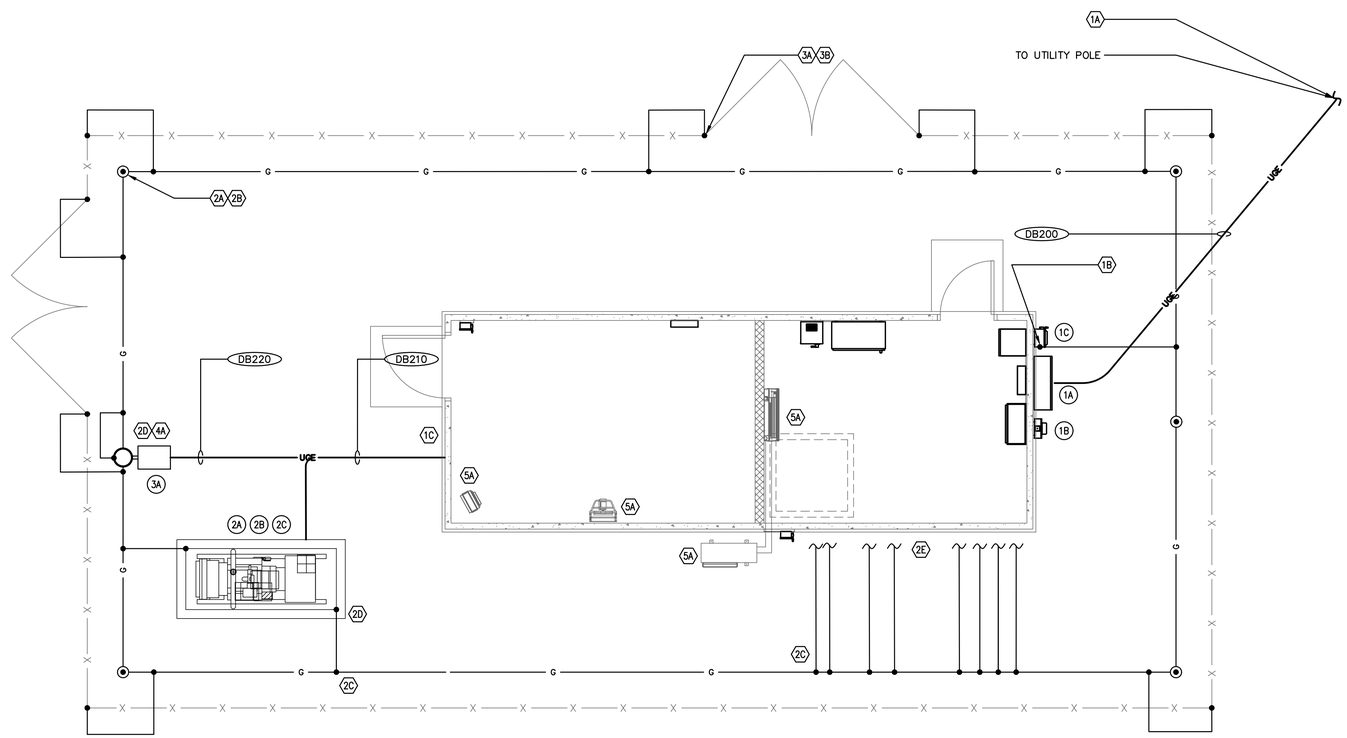

WELL No.6 POWER AND GROUNDING PLAN
SCALE: 1/4" = 1' - 0"

GENERAL NOTES:

1. REFERENCE ALL SPECIFICATIONS AND CONTRACT DRAWINGS FOR ADDITIONAL REQUIREMENTS AND CONTRACT RESPONSIBILITIES PRIOR TO COMMENCING WORK.
2. CONTRACTOR SHALL REFERENCE ALL CONTRACT DRAWINGS PRIOR TO EXCAVATION AND INSTALLATION OF UNDERGROUND RACEWAYS, DUCTBANKS AND GROUNDING/BONDING COMPONENTS.
4. ALL POWER CONDUCTORS SHALL BE STRANDED COPPER 600V XHHW-2 90°C.
5. ALL CONTROL CONDUCTORS SHALL BE STRANDED COPPER 600V THHN/THWN 75°C.
6. ALL UNDERGROUND CONDUIT SHALL BE PVC SCH-80. PVC SCH-40 SHALL BE ACCEPTABLE.
7. CONCEALED CONDUIT EMBEDDED IN CONCRETE SHALL BE SCH-40 PVC
8. TRANSITIONS THROUGH FINISHED GRADE AND CONCRETE SHALL BE PVC-COATED ALUMINUM CONDUIT EXTENDING 12-INCHES ABOVE AND BELOW TRANSITION..
9. ALL EXPOSED CONDUIT SHALL BE RIGID ALUMINUM CONDUIT (RAC).
10. ALL FLEXIBLE CONDUIT SHALL BE LIQUID-TIGHT METALLIC STEEL (LFMC) MADE UP WITH DIE-CAST ALUMINUM METALLIC FITTINGS.
11. ALL CONDUIT SHALL ENTER EXTERIOR ENCLOSURES FROM THE BOTTOM AND FITTED WITH GROUNDING CONDUIT HUBS.
    11.1. NOTE: CONDUIT PENETRATIONS TO THE TOP SIDE OF ENCLOSURES ALLOWED WITH THREADED CONDUIT HUBS ONLY.

KEYNOTES:

1A INSTALL 4.0"C PVC SCH-80 CONDUIT UNDERGROUND FROM UTILITY POLE TO NEW CT METERING CABINET. CONTRACTOR SHALL COORDINATE WITH UTILITY PRIOR TO INSTALLATION.

1B ROUTE #2AWG GROUNDING ELECTRODE CONDUCTOR IN PVC SCH-80 0.75"C MECHANICALLY CONNECTED TO NEW MAIN DISCONNECT NEUTRAL

1C INSTALL POWER AND CONTROL CONDUITS FROM 'ATS-200' TO 'GEN-200' AS DESCRIBED BELOW:
a. ALL CONDUITS SHALL BE ROUTED IN DIRECT-BURIED DUCTBANK UNDER SLAB INSIDE WELL HOUSE
b. ALL CONDUITS SHALL BE ROUTED IN CONCRETE-ENCASED NON-REINFORCED DUCTBANK OUTSIDE WELL HOUSE

2A CONTRACTOR SHALL PROVIDE AND INSTALL 3/4" x 120" CU-CLAD GROUND ROD (TYPICAL ALL):
HARGER P/N 3410C OR APPROVED EQUAL

2B EXOTHERMIC WELD 4/0AWG CABLE TO 3/4-INCH GROUND ROD: TYPE-GT OR EQUAL (TYPICAL ALL)

2C EXOTHERMIC WELD 4/0AWG CABLE RUN TO #2AWG CABLE TAP: TYPE-TA OR EQUAL (TYPICAL ALL)

2D BOND ELECTRICAL EQUIPMENT AND/OR FRAMING SUPPORTS WITH BARE #2AWG BARE CU WIRE WITH HIGH-PRESS MECHANICAL LUG CONNECTIONS USING STAINLESS-STEEL ANTI-VIBRATION FASTENERS (TYPICAL ALL)

2E BOND ELECTRICAL EQUIPMENT, WELL CASING, PIPING AND/OR FLANGES LOCATED INSIDE WELL HOUSE No.6 WITH BARE #2AWG BARE CU WIRE WITH HIGH-PRESS MECHANICAL LUG CONNECTIONS USING STAINLESS-STEEL ANTI-VIBRATION FASTENERS (TYPICAL ALL) (REFERENCE DRAWING E5.0 FOR BONDING CONNECTIONS INSIDE WELL HOUSE)

3A PROVIDE AND INSTALL BONDING CONNECTIONS (TYPICAL ALL) FROM FENCE POSTS TO PERIMETER GROUNDING RING WITH UL LISTED FENCE POST CLAMP:
HARGER P/N CPC1.5/2TP OR APPROVED EQUAL

3B PROVIDE AND INSTALL (TYPICAL ALL) FLEXIBLE BONDING CONNECTIONS FROM FENCE POSTS TO FENCE GATES WITH UL LISTED CLAMPS AND FLEXIBLE BRAIDED CONDUCTORS:
HARGER P/N CPC1.5/2TP OR APPROVED EQUAL
HARGER P/N GS1.51252417/8F OR APPROVED EQUAL

4A PROVIDE AND INSTALL NEW LED FULL CUT-OFF LIGHT FIXTURE WITH PHOTOSENSOR CONTROL:
LITHONIA P/N RSX1-LED-P1-30K-R3S-MVOLT-RPA-PE-DDBXD OR EQUAL
LIGHT FIXTURE SHALL BE MOUNTED ON NEW TRANSMISSION GRADE, CLASS 3 OR BETTER WOODEN POLE

5A REFERENCE DRAWING E5.0 FOR HVAC EQUIPMENT INSIDE WELL HOUSE

EQUIPMENT IDENTIFIERS

1A UTILITY CT CABINET 'CTB-200'
1B UTILITY METER SOCKET BASE 'MSB-200'
1C MAIN DISCONNECT SWITCH 'MDS-200'
2A GENERATOR 'GEN-200'
2B GENERATOR BLOCK HEATER
2C GENERATOR BATTERY CHARGER
3A AREA POLE LIGHT
4A SUMP PUMP W/INTEGRAL FLOAT

DUCTBANK CALL-OUTS

DB200 FROM UTILITY POLE TO 'CTB-200':
[PULL-STRING] 4.0"C

DB210 FROM 'GEN-200' TO ATS-200:
10#14 #12G 0.75"C
3#4/0 #4/0N #6G 2.0"C

FROM 'GEN-200' TO 'PCP-200':
10#14 #12G 0.75"C

FROM 'GEN-200' TO 'LP-200':
2#10 2#12 #10G 1.0"C

FROM 'LP-200' TO AREA POLE LIGHT:
2#12 #12G 0.75"C

DB220 FROM 'LP-200' TO AREA POLE LIGHT:
2#12 #12G 0.75"C

REV.NO.	DESCRIPTION	DATE
C	ISSUED FOR BID - NOT FOR CONSTRUCTION	07 APR 2020
B	FINAL DESIGN - NOT FOR CONSTRUCTION	06 MAR 2020
A	PRELIMINARY DESIGN - NOT FOR CONSTRUCTION	10 JAN 2020

REVISIONS

NORTH CAROLINA PROFESSIONAL SEAL 041530 ENGINEER JASON A GILLENTINE
7 APR 2020

McKIM&CREED
Venture IV Building, Suite 500
1730 Varsity Drive
Raleigh, North Carolina 27606
Phone: (919) 233-8091, Fax: (919) 233-8031
NC License# F-1222
www.mckimcreed.com

PENDER COUNTY
ROCKY POINT/TOPSAIL WATER AND SEWER DISTRICT

HAMPSTEAD / SCOTT'S HILL WELL PROJECT

ELECTRICAL

ANNEX - WELL NO.6 ELECTRICAL SITE PLAN

PROJ. START DATE:	2019.12
MCE PROJ. #	00542-0079
DRAWN	SN/RCR
DESIGNED	SN/JAG
CHECKED	JAG
PROJ. MGR.	SJK

SCALE
HORIZONTAL: AS SHOWN
VERTICAL: N/A

DRAWING NUMBER: E3.1
REVISION: C

STATUS: ISSUED FOR BID
NOT FOR CONSTRUCTION

I:\00542\0079\WATER\80-DRAWINGS\ELECTRICAL\EB100_00542-0079.DWG 04/07/2020 12:55:48 JASON GILLENTINE

ELECTRICAL PANEL: PP-100

LOCATION: WELL No.4 BUIDLING/ELECTRICAL ROOM

ENCLOSURE: NEMA-12 MOUNTING: SURFACE
VOLTS: 480/270V 3 PHASE/4 WIRE
BRACING: 35kAIC FULLY RATED

MAIN: 200A MCB
NEUTRAL: 100%
FEED: 3#4/0 #4/0N #6G 2.0"C

LOAD SERVED	LOAD (KVA) A	LOAD (KVA) B	LOAD (KVA) C	BREAKER AMP	BREAKER POLE	FEEDER CIRCUIT CONDUIT & WIRING	POSITION	PH	POSITION	FEEDER CIRCUIT CONDUIT & WIRING	BREAKER POLE	BREAKER AMP	LOAD (KVA) C	LOAD (KVA) B	LOAD (KVA) A	LOAD SERVED
UNIT SUB-STATION "LP-100"	23.000			60	3	3#6 #10G 1.0"C	1	A	2	3#4 #8G 1.25"C	3	80			18.100	WELL PUMP MOTOR No.4 VFD "VFD-MTR-11011"
		3.077						B						18.100		
			3.574					C					18.100			
TEMPERED WATER HEATER - EYE WASH "WTR-HTR-100"	10.700			50	3	3#8 #10G 1.0"C	3	A	4	3#10 #10G 1.0"C	3	30			1.100	UNIT HEATER "UH-100"
		10.700						B						1.100		
			10.700					C					1.100			
SPARE BREAKER	0.000			30	3		5	A	6		1	20			0.000	SPARE BREAKER
		0.000						B	7		1	20		0.000		SPARE BREAKER
			0.000					C	8		1	20	0.000			SPARE BREAKER
TOTAL(S):	33.700	13.777	14.274										19.200	19.200	19.200	

TOTAL BUS A LOAD: 52.900 KVA
TOTAL BUS B LOAD: 32.977 KVA
TOTAL BUS C LOAD: 33.474 KVA
TOTAL CONNECTED KVA: 119.351

ELECTRICAL PANEL: LP-100

LOCATION: WELL No.4 BUIDLING/ELECTRICAL ROOM

ENCLOSURE: NEMA-12 MOUNTING: SURFACE
VOLTS: 208/120V 3 PHASE/4 WIRE
BRACING: 35kAIC FULLY RATED

MAIN: 60A MCB
NEUTRAL: 100%
FEED: 3#8 #10G 1.25"C (FROM 15kVA TRANSFORMER)

	LOAD SERVED	LOAD (KVA) A	LOAD (KVA) B	LOAD (KVA) C	BREAKER AMP	BREAKER POLE	FEEDER CIRCUIT CONDUIT & WIRING	CIRCUIT	PH	CIRCUIT	FEEDER CIRCUIT CONDUIT & WIRING	BREAKER POLE	BREAKER AMP	LOAD (KVA) C	LOAD (KVA) B	LOAD (KVA) A	LOAD SERVED	
	SPARE BREAKER	0.000			30	3		1	A	2	2#8 #10N #10G 1.25"C	2	30			0.840	AC UNIT "ACU-100"	
			0.000					3	B	4					0.840			
				0.000				5	C	6	2#12 #12G 0.75"C	1	20	0.313			EXHAUST FAN "EF-100"	
	"FT/FE-11411", "AIT/AE-11441"	0.350			20	1	2#12 #12G 0.75"C	7	A	8	2#12 #12G 0.75"C	1	20			0.500	RECP: ELECTRICAL/CHEMICAL ROOM	
1	CHEM DOSING PUMP "CMP-11021"		0.933		20G	1	2#10 #10G 0.75"C	9	B	10	2#12 #12G 0.75"C	1	20		0.500		RECP: ELECTRICAL/CHEMICAL ROOM	
	LTS: ELECTRICAL ROOM			0.094	20	1	2#12 #12G 0.75"C	11	C	12	2#12 #12G 0.75"C	1	20	0.500			RECP: BUILDING EXTERIOR	
	LTS: CHEMICAL ROOM	0.057			20	1	2#12 #12G 0.75"C	13	A	14	2#10 2#12 #10G 1.0"C	1	20			0.250	GENERATOR BATTERY	
	LTS: EXTERIOR EMERGENCY WALL-PACK		0.054		20	1	2#12 #12G 0.75"C	15	B	16		2	20		0.750		GENERATOR BLOCK HEATER	
	AREA POLE LIGHT			0.051	20	1	2#12 #12G 0.75"C	17	C	18				0.750				
1	SUMP PUMP	0.500			20G	1	2#10 #12G 0.75"C	19	A	20	2#10 #10G 0.75"C	1	20			0.500	MODULATING CONTROL VALVE "SOV-11211"	
	SPARE BREAKER		0.000		20	1		21	B	22		1	20		0.000		SPARE BREAKER	
1	CHEM DOSING PUMP "CMP-11031"			0.933	20G	1	2#10 #10G 0.75"C	23	C	24	2#10 #10G 0.75"C	1	20G	0.933			CHEMICAL DOSING PUMP "CMP-11041"	1
	TOTAL(S):	0.907	0.987	1.078										2.496	2.090	2.090		

TOTAL BUS A LOAD: 2.997 KVA
TOTAL BUS B LOAD: 3.077 KVA
TOTAL BUS C LOAD: 3.574 KVA
TOTAL CONNECTED KVA: 9.648

ELECTRICAL PANEL: PP-200

LOCATION: WELL No.6 BUIDLING/ELECTRICAL ROOM

ENCLOSURE: NEMA-12 MOUNTING: SURFACE
VOLTS: 480/270V 3 PHASE/4 WIRE
BRACING: 35kAIC FULLY RATED

MAIN: 150A MCB
NEUTRAL: 100%
FEED: 3#4/0 #4/0N #6G 2.0"C

LOAD SERVED	LOAD (KVA) A	LOAD (KVA) B	LOAD (KVA) C	BREAKER AMP	BREAKER POLE	FEEDER CIRCUIT CONDUIT & WIRING	POSITION	PH	POSITION	FEEDER CIRCUIT CONDUIT & WIRING	BREAKER POLE	BREAKER AMP	LOAD (KVA) C	LOAD (KVA) B	LOAD (KVA) A	LOAD SERVED
UNIT SUB-STATION "LP-200"	2.997			60	3	3#6 #10G 1.0"C	1	A	2	3#4 #8G 1.25"C	3	80			18.100	WELL PUMP MOTOR No.6 VFD "VFD-MTR-21011"
		3.077						B						18.100		
			3.574					C					18.100			
TEMPERED WATER HEATER - EYE WASH "WTR-HTR-200"	10.700			50	3	3#8 #10G 1.0"C	3	A	4	3#10 #10G 1.0"C	3	30			1.100	UNIT HEATER "UH-200"
		10.700						B						1.100		
			10.700					C					1.100			
SPARE BREAKER	0.000			30	3		5	A	6		1	20			0.000	SPARE BREAKER
		0.000						B	7		1	20		0.000		SPARE BREAKER
			0.000					C	8		1	20	0.000			SPARE BREAKER
TOTAL(S):	13.697	13.777	14.274										19.200	19.200	19.200	

TOTAL BUS A LOAD: 32.897 KVA
TOTAL BUS B LOAD: 32.977 KVA
TOTAL BUS C LOAD: 33.474 KVA
TOTAL CONNECTED KVA: 99.348

ELECTRICAL PANEL: LP-200

LOCATION: WELL No.6 BUIDLING/ELECTRICAL ROOM

ENCLOSURE: NEMA-12 MOUNTING: SURFACE
VOLTS: 208/120V 3 PHASE/4 WIRE
BRACING: 35kAIC FULLY RATED

MAIN: 60A MCB
NEUTRAL: 100%
FEED: 3#8 #10G 1.25"C (FROM 15kVA TRANSFORMER)

	LOAD SERVED	LOAD (KVA) A	LOAD (KVA) B	LOAD (KVA) C	BREAKER AMP	BREAKER POLE	FEEDER CIRCUIT CONDUIT & WIRING	CIRCUIT	PH	CIRCUIT	FEEDER CIRCUIT CONDUIT & WIRING	BREAKER POLE	BREAKER AMP	LOAD (KVA) C	LOAD (KVA) B	LOAD (KVA) A	LOAD SERVED	
	SPARE BREAKER	0.000			30	3		1	A	2	2#8 #10N #10G 1.25"C	2	30			0.840	AC UNIT "ACU-200"	
			0.000					3	B	4					0.840			
				0.000				5	C	6	2#12 #12G 0.75"C	1	20	0.313			EXHAUST FAN "EF-200"	
	"FT/FE-21411", "AIT/AE-21441"	0.350			20	1	2#12 #12G 0.75"C	7	A	8	2#12 #12G 0.75"C	1	20			0.500	RECP: ELECTRICAL/CHEMICAL ROOM	
1	CHEM DOSING PUMP "CMP-21021"		0.933		20G	1	2#10 #10G 0.75"C	9	B	10	2#12 #12G 0.75"C	1	20		0.500		RECP: ELECTRICAL/CHEMICAL ROOM	
	LTS: ELECTRICAL ROOM			0.094	20	1	2#12 #12G 0.75"C	11	C	12	2#12 #12G 0.75"C	1	20	0.500			RECP: BUILDING EXTERIOR	
	LTS: CHEMICAL ROOM	0.057			20	1	2#12 #12G 0.75"C	13	A	14	2#10 2#12 #10G 1.0"C	1	20			0.250	GENERATOR BATTERY	
	LTS: EXTERIOR EMERGENCY WALL-PACK		0.054		20	1	2#12 #12G 0.75"C	15	B	16		2	20		0.750		GENERATOR BLOCK HEATER	
	AREA POLE LIGHT			0.051	20	1	2#12 #12G 0.75"C	17	C	18				0.750				
1	SUMP PUMP	0.500			20G	1	2#10 #10G 0.75"C	19	A	20	2#10 #10G 0.75"C	1	20			0.500	MODULATING CONTROL VALVE "SOV-21211"	
	SPARE BREAKER		0.000		20	1		21	B	22		1	20		0.000		SPARE BREAKER	
1	CHEM DOSING PUMP "CMP-21031"			0.933	20G	1	2#10 #10G 0.75"C	23	C	24	2#10 #10G 0.75"C	1	20G	0.933			CHEMICAL DOSING PUMP "CMP-21041"	1
	TOTAL(S):	0.907	0.987	1.078										2.496	2.090	2.090		

TOTAL BUS A LOAD: 2.997 KVA
TOTAL BUS B LOAD: 3.077 KVA
TOTAL BUS C LOAD: 3.574 KVA
TOTAL CONNECTED KVA: 9.648

ELECTRICAL LOAD DEMAND CALCULATION

WELL No.4 ELECTRICAL LOADS

DESCRIPTION	TYPE	DEMAND FACTOR	kVA	DEMAND kVA
WELL PUMP MOTOR ASSEMBLY No.4	CONTINUOUS	1.25	46.63	58.28
TEMPERED WATER SYSTEM "WTR-HTR-100"	NONCONTINUOUS	1.00	32.00	32.00
UNIT HEATER "UH-100"	CONTINUOUS	1.25	3.30	4.12
PANEL "LP-100":				
RAW WATER CONTROL VALVE "SOV-11211"	NONCONTINUOUS	1.00	0.50	0.50
CHEMICAL DOSING PUMP "CMP-11021"	NONCONTINUOUS	1.00	0.93	0.93
CHEMICAL DOSING PUMP "CMP-11031"	NONCONTINUOUS	1.00	0.93	0.93
HVAC:				
AC UNIT "ACU-100"	NONCONTINUOUS	1.00	2.70	2.70
EXHAUST FAN "EF-100"	NONCONTINUOUS	1.00	0.31	0.31
LIGHTING:				
0.256kVA @ 100%	NONCONTINUOUS	1.00	0.26	0.26
RECEPTACLES:				
1.5kVA @ 100%	NONCONTINUOUS	1.00	1.50	1.50
GENERATOR:				
BLOCK HEATER	NONCONTINUOUS	1.00	1.50	1.50
BATTERY CHARGER/HEATER	NONCONTINUOUS	1.00	0.25	0.25
MISCELLANEOUS EQUIPMENT	NONCONTINUOUS	1.00	0.35	0.35
			(SUM) DEMAND LOAD:	103.64
			(20%) DEMAND VARIANCE:	20.73
			TOTAL ADJUSTED DEMAND LOAD:	124.37

ESTIMATED NORMALIZED DEMAND FEEDER AMPERAGE

124.37kVA 460V/3ϕ= 156A

ELECTRICAL LOAD DEMAND CALCULATION

WELL No.6 ELECTRICAL LOADS

DESCRIPTION	TYPE	DEMAND FACTOR	kVA	DEMAND kVA
WELL PUMP MOTOR ASSEMBLY No.6	CONTINUOUS	1.25	37.30	46.63
TEMPERED WATER SYSTEM "WTR-HTR-200"	NONCONTINUOUS	1.00	32.00	32.00
UNIT HEATER "UH-200"	CONTINUOUS	1.250	3.30	4.12
PANEL "LP-200":				
RAW WATER CONTROL VALVE "SOV-21211"	NONCONTINUOUS	1.00	0.50	0.50
CHEMICAL DOSING PUMP "CMP-21021"	NONCONTINUOUS	1.00	0.93	0.93
CHEMICAL DOSING PUMP "CMP-21031"	NONCONTINUOUS	1.00	0.93	0.93
HVAC:				
AC UNIT "ACU-200"	NONCONTINUOUS	1.00	2.70	2.70
EXHAUST FAN "EF-200"	NONCONTINUOUS	1.00	0.31	0.31
LIGHTING:				
0.256kVA @ 100%	NONCONTINUOUS	1.00	0.26	0.26
RECEPTACLES:				
1.5kVA @ 100%	NONCONTINUOUS	1.00	1.50	1.50
GENERATOR:				
BLOCK HEATER	NONCONTINUOUS	1.00	1.50	1.50
BATTERY CHARGER/HEATER	NONCONTINUOUS	1.00	0.25	0.25
MISCELLANEOUS EQUIPMENT	NONCONTINUOUS	1.00	0.35	0.35
			(SUM) DEMAND LOAD:	91.98
			(20%) DEMAND VARIANCE:	18.40
			TOTAL ADJUSTED DEMAND LOAD:	110.38

ESTIMATED NORMALIZED DEMAND FEEDER AMPERAGE

110.38kVA 460V/3ϕ= 139A

KEYNOTES:

1. PROVIDE AND INSTALL GFCI CLASS B CIRCUIT BREAKERS

PANEL SCHEDULES

SCALE: N.T.S.

REV.NO.	DESCRIPTION	DATE
C	ISSUED FOR BID - NOT FOR CONSTRUCTION	07 APR 2020
B	FINAL DESIGN - NOT FOR CONSTRUCTION	06 MAR 2020
A	PRELIMINARY DESIGN - NOT FOR CONSTRUCTION	10 JAN 2020

REVISIONS

NORTH CAROLINA PROFESSIONAL SEAL 041530 ENGINEER JASON A GILLENTINE 7 APR 2020

McKIM&CREED
Venture IV Building, Suite 500
1730 Varsity Drive
Raleigh, North Carolina 27606
Phone: (919) 233-8091, Fax: (919) 233-8031
NC License# F-1222
www.mckimcreed.com

PENDER COUNTY

ROCKY POINT/TOPSAIL WATER AND SEWER DISTRICT

HAMPSTEAD / SCOTT'S HILL WELL PROJECT

ELECTRICAL

PANEL SCHEDULES AND LOAD TABLES

PROJ. START DATE:	2019.12
MCE PROJ. #	00542-0079
DRAWN	SN/RCR
DESIGNED	SN/JAG
CHECKED	JAG
PROJ. MGR.	SJK

SCALE
HORIZONTAL: N/A
VERTICAL: N/A

DRAWING NUMBER: E4.0
REVISION: C

STATUS: ISSUED FOR BID NOT FOR CONSTRUCTION

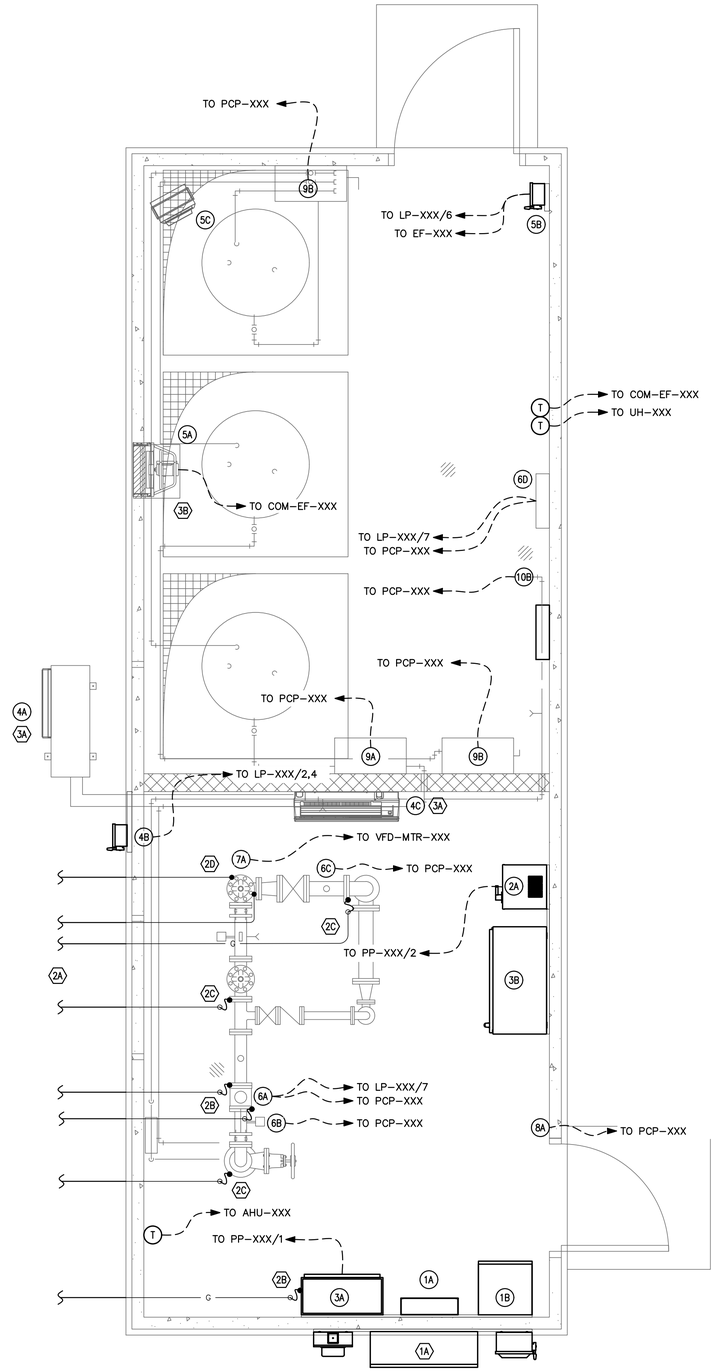

TYPICAL WELL HOUSE POWER AND GROUNDING PLAN
SCALE: 1/2" = 1' – 0"

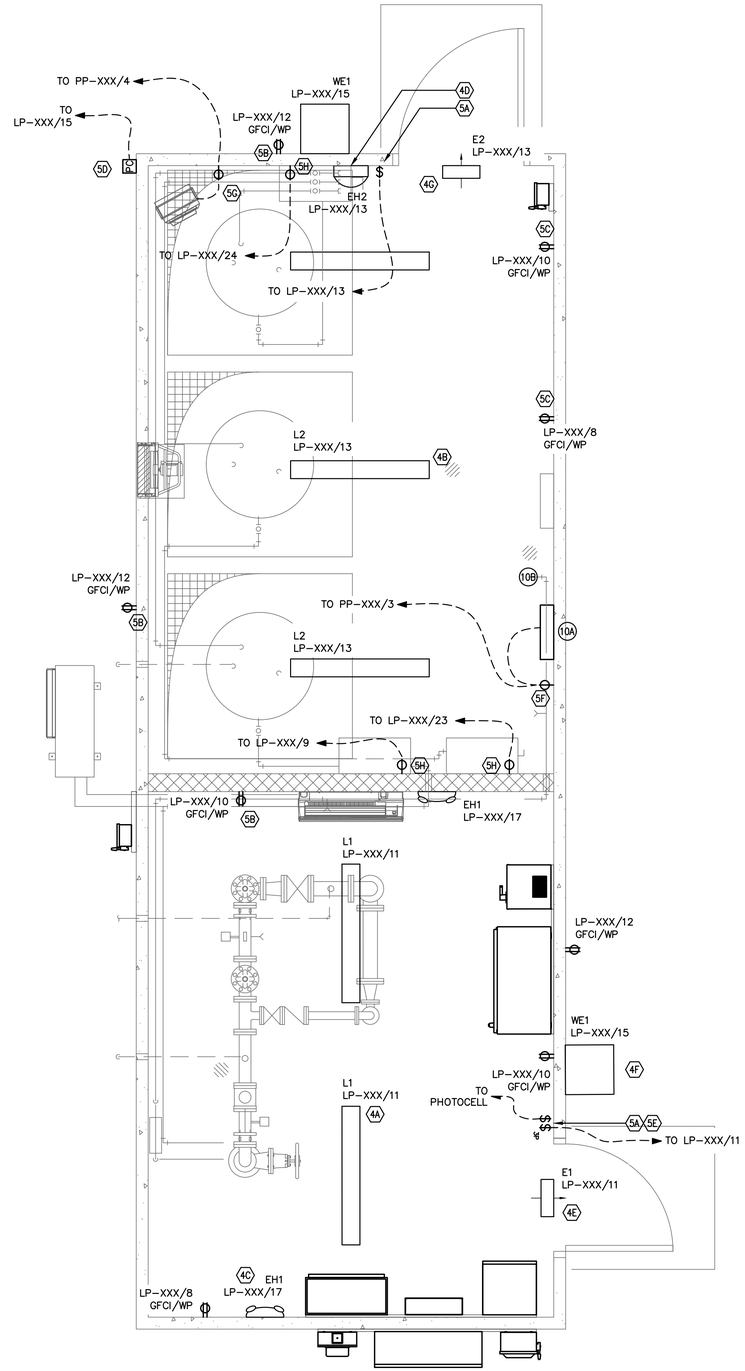

TYPICAL WELL LIGHTING AND RECEPTACLE PLAN
SCALE: 1/2" = 1' – 0"

EQUIPMENT IDENTIFIERS

- 1A 480/277V PANELBOARD 'PP-XXX'
- 1B AUTOMATIC TRANSFER SWITCH 'ATS-XXX'
- 2A WELL PUMP MOTOR No.X VARIABLE FREQUENCY DRIVE 'VFD-MTR-XXX'
- 3A UNIT SUB-STATION 'LP-XXX'
- 3B PUMP CONTROL PANEL 'PCP-XXX'
- 4A AIR CONDITIONING UNIT 'ACU-XXX'
- 4B AIR CONDITIONING UNIT DISCONNECT 'DIS-ACU-XXX'
- 4C AIR HANDLING UNIT 'AHU-XXX'
- 5A EXHAUST FAN 'EF-XXX'
- 5B EXHAUST FAN COMBINATION STARTER 'COM-EF-XXX'
- 5C UNIT HEATER 'UH-XXX'
- 6A WELL No.X FLOW ELEMENT/TRANSMITTER 'FT/FE-XXXXX'
- 6B WELL No.X PRESSURE ELEMENT/TRANSMITTER 'PT/PE-XXXXX'
- 6C WELL No.X PRESSURE ELEMENT/TRANSMITTER 'PT/PE-XXXXX'
- 6D WELL No.X CHEMICAL RESIDUAL NAOCL ANALYZER 'AIT/AE-XXXXX'
- 7A WELL No.X RAW WATER CONTROL VALVE 'CV-XXXXX'
- 8A WELL No.X PUMP ROOM INTRUSION SWITCH 'YS-XXXXX'
- 8B WELL No.X CHEMICAL ROOM INTRUSION SWITCH 'YS-XXXXX'
- 9A WELL No.X HYPOCHLORITE PUMP 'CMP-XXXXX'
- 9B WELL No.X POLYPHOSPHATE PUMP 'CMP-XXXXX'
- 9C WELL No.X HYDROGEN PEROXIDE PUMP 'CMP-XXXXX'
- 10A TEMPERED WATER HEATER 'WTR-HTR-XXX'
- 10B EMERGENCY EYEWASH/SHOWER ACTIVE SWITCH 'YS-XXXXX'

GENERAL NOTES:

1. REFERENCE ALL SPECIFICATIONS AND CONTRACT DRAWINGS FOR ADDITIONAL REQUIREMENTS AND CONTRACT RESPONSIBILITIES PRIOR TO COMMENCING WORK.
2. CONTRACTOR SHALL REFERENCE ALL CONTRACT DRAWINGS PRIOR TO EXCAVATION AND INSTALLATION OF UNDERGROUND RACEWAYS, DUCTBANKS AND GROUNDING/BONDING COMPONENTS.
4. ALL POWER CONDUCTORS SHALL BE STRANDED COPPER 600V XHHW-2 90°C.
5. ALL CONTROL CONDUCTORS SHALL BE STRANDED COPPER 600V THHN/THWN 75°C.
6. ALL UNDERGROUND CONDUIT SHALL BE PVC SCH-80. PVC SCH-40 SHALL BE ACCEPTABLE.
7. CONCEALED CONDUIT EMBEDDED IN CONCRETE SHALL BE SCH-40 PVC
8. TRANSITIONS THROUGH FINISHED GRADE AND CONCRETE SHALL BE PVC-COATED ALUMINUM CONDUIT EXTENDING 12-INCHES ABOVE AND BELOW TRANSITION..
9. ALL EXPOSED CONDUIT SHALL BE RIGID ALUMINUM CONDUIT (RAC).
10. ALL FLEXIBLE CONDUIT SHALL BE LIQUID-TIGHT METALLIC STEEL (LFMC) MADE UP WITH DIE-CAST ALUMINUM METALLIC FITTINGS.
11. ALL CONDUIT SHALL ENTER EXTERIOR ENCLOSURES FROM THE BOTTOM AND FITTED WITH GROUNDING CONDUIT HUBS.

11.1. NOTE: CONDUIT PENETRATIONS TO THE TOP SIDE OF ENCLOSURES ALLOWED WITH THREADED CONDUIT HUBS ONLY.

KEYNOTES:

- 1A REFERENCE DRAWINGS E1.1 AND E3.1 FOR SERVICE-ENTRANCE EQUIPMENT AND GENERATOR INFORMATION
- 2A EXOTHERMIC WELD 4/0AWG CABLE RUN TO #2AWG CABLE TAP: TYPE-TA OR EQUAL (TYPICAL ALL)
  (REFERENCE DRAWINGS E1.1 AND E3.1 FOR GROUNDING RING TYPE-TA WELD TAPS ENTERING WELL HOUSE)
- 2B BOND ELECTRICAL EQUIPMENT AND/OR FRAMING SUPPORTS WITH BARE #2AWG BARE CU WIRE WITH HIGH-PRESS MECHANICAL LUG CONNECTIONS USING STAINLESS-STEEL ANTI-VIBRATION FASTENERS (TYPICAL ALL)
- 2C BOND MECHANICAL EQUIPMENT, PIPE AND/OR FLANGE WITH BARE #2AWG BARE CU WIRE WITH HIGH-PRESS MECHANICAL LUG CONNECTIONS USING STAINLESS-STEEL ANTI-VIBRATION FASTENERS (TYPICAL ALL)
- 2D BOND METAL WELL HEAD WITH BARE #2AWG TINNED CU WIRE WITH HIGH-PRESS MECHANICAL LUG CONNECTIONS DRILLED DIRECTLY THROUGH METAL WELL HEAD USING STAINLESS-STEEL FASTENERS (TYPICAL ALL)
- 3A PROVIDE AND INSTALL 208V 1-ϕ AIR CONDITIONING SYSTEM:
  OUTDOOR AIR CONDITIONING UNIT 'ACU-XXX'
  MITSUBISHI ELECTRIC P/N PUZ-A18NHA OR APPROVED EQUAL
  INDOOR AIR HANDLING UNIT 'AHU-XXX'
  MITSUBISHI ELECTRIC PKA-A18HA OR APPROVED EQUAL
- 3B PROVIDE AND INSTALL 120V 1-ϕ EXHAUST FAN 'EF-XX' WITH LOUVER:
  GREENHECK SIDE-WALL DIRECT DRIVE EXHAUST FAN P/N SDPE-D-08G-1-DS OR APPROVED EQUAL
  12"X12" LOUVER WITH BIRD SCREEN:
  RUSKIN P/N ELF375DXH OR APPROVED EQUAL
- 4A PROVIDE AND INSTALL NEW LED LINEAR LIGHT FIXTURES:
  LITHONIA P/N MSL-4000LM-L/LV-MVOLT-40K-80CRI OR EQUAL
  PROVIDE REQUIRED ACCESSORIES FOR CEILING MOUNT
- 4B PROVIDE AND INSTALL NEW LED LINEAR LIGHT FIXTURES:
  LITHONIA P/N VAP-FST-MD-MVOLT-4000LM-40K-80CRI OR EQUAL
  PROVIDE REQUIRED ACCESSORIES FOR CEILING MOUNT
- 4C PROVIDE AND INSTALL NEW LED EGRESS LIGHT FIXTURES:
  LITHONIA P/N ELM4L-UVOLT OR EQUAL
  PROVIDE REQUIRED ACCESSORIES FOR WALL-MOUNT
- 4D PROVIDE AND INSTALL NEW LED EGRESS LIGHT FIXTURES:
  LITHONIA P/N EXTL-SP640L-UVOLT-LTP-SDRT-HO OR EQUAL
  PROVIDE REQUIRED ACCESSORIES FOR WALL-MOUNT
- 4E PROVIDE AND INSTALL NEW LED EXIT LIGHT FIXTURES:
  LITHONIA P/N WLTE-W-1-R-SD OR EQUAL
  PROVIDE REQUIRED ACCESSORIES FOR CEILING MOUNT
- 4F PROVIDE AND INSTALL NEW LED EXTERIOR LIGHT FIXTURES:
  EATON P/N LDWP-FC-3B-120V-ED-EMLED-CD-AP OR EQUAL
  PROVIDE REQUIRED ACCESSORIES FOR WALL MOUNT
- 4G PROVIDE AND INSTALL NEW NEMA-4X EXIT LIGHT FIXTURES:
  LITHONIA P/N LV-S-W-1-R-120-ELN-SD OR EQUAL
  PROVIDE REQUIRED ACCESSORIES FOR WALL MOUNT
- 5A INDUSTRIAL GRADE 120V/20A TWO-POSITION, SINGLE-POLE, TOGGLE LIGHT SWITCH WITH NEMA-4X CORROSIVE AREA RATED ENCLOSURE:
  HUBBELL P/N HBL1221I OR APPROVED EQUAL
- 5B INDUSTRIAL GRADE 125V/20A GFCI OUTLET WITH LED POWER INDICATOR:
  PASS & SEYMOUR P/N 2095TRWRNAI OR APPROVED EQUAL
  WEATHER-RESISTANT DIE-CAST IN-USE COVER:
  MULBERRY P/N 30936 OR APPROVED EQUAL
- 5C 125V/20A GFCI OUTLET FOR CORROSIVE ENVIRONMENT:
  PASS & SEYMOUR P/N 60W47DPLX OR APPROVED EQUAL
  FD NON-FERROUS BACK BOX
  PASS & SEYMOUR P/N FD22 OR APPROVED EQUAL
- 5D INDUSTRIAL GRADE 120V/20A ELECTRONIC TYPE PHOTOCELL CONTROL W/HEAVY-DUTY DIE-CAST HOUSING:
  INTERMATIC P/N EK4436SM OR APPROVED EQUAL
- 5E INDUSTRIAL GRADE 120V/20A THREE-POSITION, TWO-CIRCUIT, CENTER OFF, DOUBLE-POLE, DOUBLE-THROW TOGGLE LIGHT SWITCH:
  HUBBELL P/N HBL1386I OR APPROVED EQUAL
- 5F PROVIDE AND INSTALL 60 INCHES AFF 480V 3ϕ 50A NEMA H-38 ANGLED TWIST-LOCK RECEPTACLE, PLUG AND SURFACE MOUNTED BOX ASSEMBLY RATED FOR CORROSIVE ENVIRONMENT.
- 5G PROVIDE AND INSTALL 60 INCHES AFF 480V 3ϕ 30A NEMA L16-30 TWIST-LOCK RECEPTACLE, PLUG AND SURFACE MOUNTED BOX ASSEMBLY RATED FOR CORROSIVE ENVIRONMENT.
- 5H PROVIDE AND INSTALL 60 INCHES AFF 125V/20A SINGLE RECEPTACLE FOR CORROSIVE ENVIRONMENT WITH WEATHER-RESISTANT DIE-CAST IN-USE COVER FED FROM CLASS B BREAKER INSIDE PANELBOARD:
  FD NON-FERROUS BACK BOX
  PASS & SEYMOUR P/N FD22 OR APPROVED EQUAL

REV.NO.	DESCRIPTION	DATE
C	ISSUED FOR BID - NOT FOR CONSTRUCTION	07 APR 2020
B	FINAL DESIGN - NOT FOR CONSTRUCTION	06 MAR 2020
A	PRELIMINARY DESIGN - NOT FOR CONSTRUCTION	10 JAN 2020

REVISIONS

NORTH CAROLINA PROFESSIONAL SEAL 041530 ENGINEER JASON A GILLENTINE
7 APR 2020

McKIM&CREED
Venture IV Building, Suite 500
1730 Varsity Drive
Raleigh, North Carolina 27606
Phone: (919) 233-8091, Fax: (919) 233-8031
NC License# F-1222
www.mckimcreed.com

COUNTY OF PENDER

PENDER COUNTY

ROCKY POINT/TOPSAIL WATER AND SEWER DISTRICT

HAMPSTEAD / SCOTT'S HILL WELL PROJECT

ELECTRICAL

TYPICAL WELL HOUSE POWER AND GROUNDING PLAN

PROJ. START DATE:	2019.12
MCE PROJ. #	00542-0079
DRAWN	SN/RCR
DESIGNED	SN/JAG/RCR
CHECKED	JAG
PROJ. MGR.	SJK

SCALE
HORIZONTAL: AS SHOWN
VERTICAL: N/A

E5.0
DRAWING NUMBER
C
REVISION

STATUS: ISSUED FOR BID
NOT FOR CONSTRUCTION

I:\00542\0079\WATER\80-DRAWINGS\ELECTRICAL\EP010_00542-0079.DWG 04/07/2020 12:56:29 JASON GILLENTINE

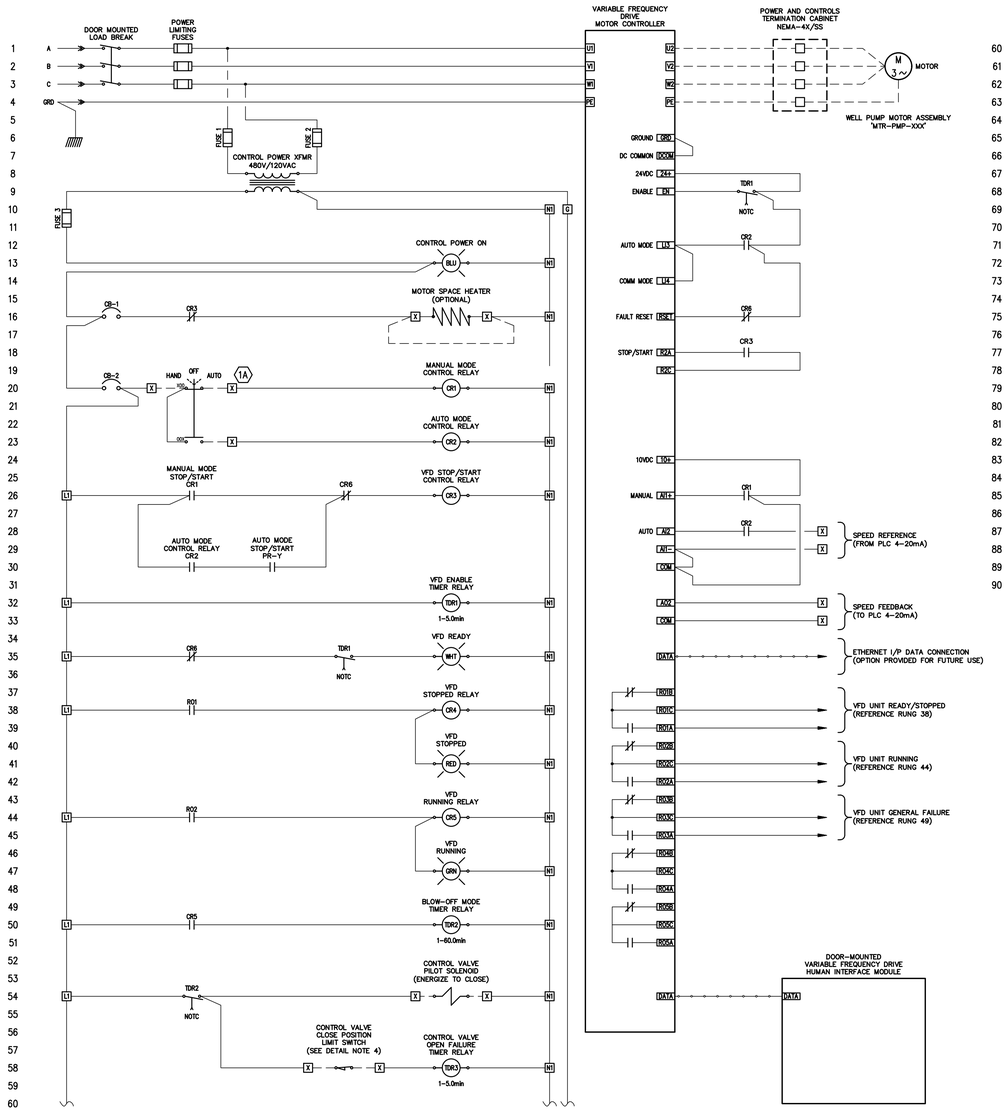

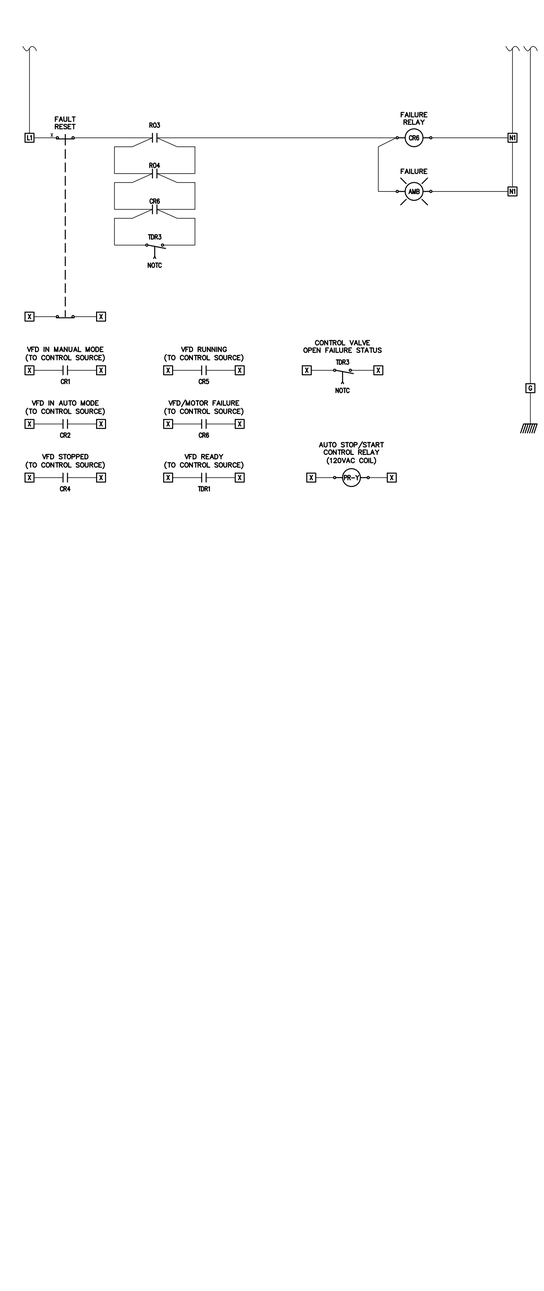

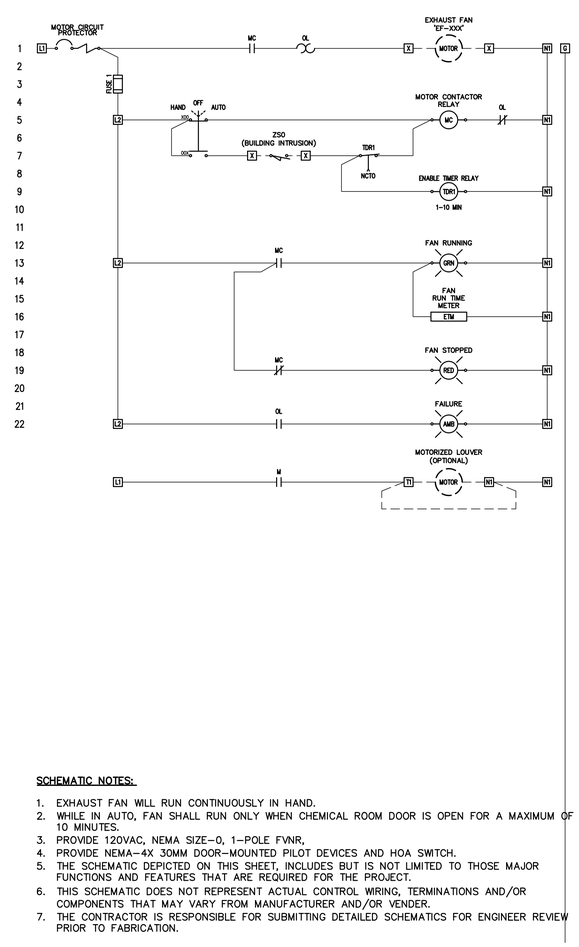

SCHEMATIC NOTES:

1. EXHAUST FAN WILL RUN CONTINUOUSLY IN HAND.
2. WHILE IN AUTO, FAN SHALL RUN ONLY WHEN CHEMICAL ROOM DOOR IS OPEN FOR A MAXIMUM OF 10 MINUTES.
3. PROVIDE 120VAC, NEMA SIZE-0, 1-POLE FVNR,
4. PROVIDE NEMA-4X 30MM DOOR-MOUNTED PILOT DEVICES AND HOA SWITCH.
5. THE SCHEMATIC DEPICTED ON THIS SHEET, INCLUDES BUT IS NOT LIMITED TO THOSE MAJOR FUNCTIONS AND FEATURES THAT ARE REQUIRED FOR THE PROJECT.
6. THIS SCHEMATIC DOES NOT REPRESENT ACTUAL CONTROL WIRING, TERMINATIONS AND/OR COMPONENTS THAT MAY VARY FROM MANUFACTURER AND/OR VENDER.
7. THE CONTRACTOR IS RESPONSIBLE FOR SUBMITTING DETAILED SCHEMATICS FOR ENGINEER REVIEW PRIOR TO FABRICATION.

TYPICAL EXHAUST FAN COMBINATION STARTER SCHEMATIC

SCALE: N.T.S.

SCHEMATIC NOTES:

1. THE SCHEMATIC DEPICTED ON THIS SHEET, INCLUDES BUT IS NOT LIMITED TO THOSE MAJOR FUNCTIONS AND FEATURES THAT ARE REQUIRED FOR THE PROJECT
2. THIS SCHEMATIC DOES NOT REPRESENT ACTUAL CONTROL WIRING, TERMINATIONS AND/OR COMPONENTS THAT MAY VARY FROM MANUFACTURER AND/OR VENDOR
3. THE CONTRACTOR IS RESPONSIBLE FOR SUBMITTING DETAILED SCHEMATICS FOR ENGINEER REVIEW PRIOR TO FABRICATION
4. BASIS OF DESIGN ASSUMES CONTROL VALVE IS NORMALLY OPEN (DE-ENERGIZED STATE) TO BLOW-OFF PIPING AND NORMALLY CLOSED TO THE RAW WATER COLLECTION PIPING
5. WHEN THE CONTROL VALVE IS ACTIVATED (ENERGIZED) TO CLOSE THE BLOW-OFF PIPING AND OPEN THE RAW WATER COLLECTION PIPING

TYPICAL VFD MOTOR-CONTROL SCHEMATIC

SCALE: N.T.S.

REV. NO.	DESCRIPTION	DATE
C	ISSUED FOR BID - NOT FOR CONSTRUCTION	07 APR 2020
B	FINAL DESIGN - NOT FOR CONSTRUCTION	06 MAR 2020
A	PRELIMINARY DESIGN - NOT FOR CONSTRUCTION	10 JAN 2020

REVISIONS

NORTH CAROLINA PROFESSIONAL SEAL 041530 ENGINEER JASON A. GILLENTINE 7 APR 2020

McKIM&CREED
Venture IV Building, Suite 500
1730 Varsity Drive
Raleigh, North Carolina 27606
Phone: (919) 233-8091, Fax: (919) 233-8031
NC License# F-1222
www.mckimcreed.com

PENDER COUNTY

ROCKY POINT/TOPSAIL WATER AND SEWER DISTRICT

HAMPSTEAD / SCOTT'S HILL WELL PROJECT

ELECTRICAL

TYPICAL MOTOR-CONTROL SCHEMATICS

PROJ. START DATE:	2019.12
MCE PROJ. #	00542-0079
DRAWN	SN/RCR
DESIGNED	SN/JAG/RCR
CHECKED	JAG
PROJ. MGR.	SJK

SCALE
HORIZONTAL: N/A
VERTICAL: N/A

E6.0
DRAWING NUMBER
C
REVISION

STATUS: ISSUED FOR BID
NOT FOR CONSTRUCTION

I:\00542\0079\WATER\80-DRAWINGS\ELECTRICAL\EM020_00542-0079.DWG 04/07/2020 12:56:37 JASON GILLENTINE

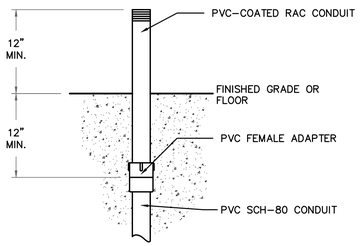

CONDUIT STUB-UP (NEW)
SCALE: N.T.S.

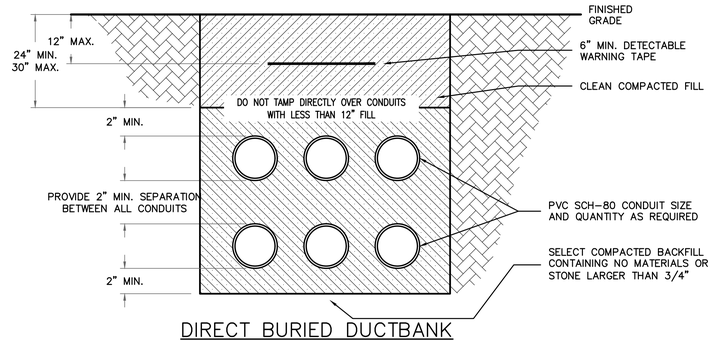

DIRECT BURIED DUCTBANK
SCALE: N.T.S.

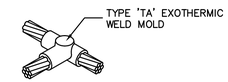

EXOTHERMIC WELD 'TA' CONNECTION
SCALE: N.T.S.

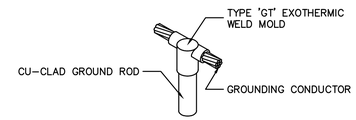

EXOTHERMIC WELD 'GT' CONNECTION
SCALE: N.T.S.

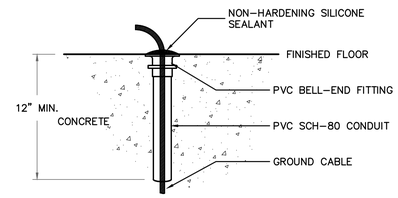

GROUND CABLE SLEEVE DETAIL
SCALE: N.T.S.

GENERAL GROUNDING/BONDING NOTES:

1. GROUNDING AND BONDING SYSTEMS SHALL COMPLY WITH NFPA 70 AND NFPA 780
2. ALL DIRECT-BURIED GROUNDING SYSTEM CONDUCTORS SHALL BE BARE 4/0AWG COPPER
3. ALL CONCRETE ENCASED GROUNDING SYSTEM CONDUCTORS SHALL BE TINNED 4/0AWG COPPER
4. ALL GROUNDING AND BONDING TAPS SHALL BE TINNED #2AWG COPPER MINIMUM
5. GROUNDING SYSTEM CONDUCTORS SHALL BE BURIED 30-INCH BELOW FINISHED GRADE
6. UNDERGROUND OR CONCRETE ENCASED GROUNDING SYSTEM CONNECTIONS SHALL BE MADE WITH EXOTHERMIC WELDS
7. CONNECTIONS TO STRUCTURAL STEEL AND/OR REBAR SHALL BE MADE WITH EXOTHERMIC WELDS
8. ELECTRICAL EQUIPMENT AND/OR FRAMING SUPPORTS SHALL BE BONDED TO GROUNDING SYSTEM USING TINNED #2AWG COPPER; MECHANICAL LUGS; 316L STAINLESS-STEEL, ANTI-VIBRATION FASTENERS AND BLUE 'LOCTITE' OR EQUAL THREAD COMPOUND (MINIMUM 2 LOCATIONS)
9. MECHANICAL EQUIPMENT AND/OR SKID FRAMING SHALL BE BONDED TO GROUNDING SYSTEM USING TINNED #2AWG COPPER; MECHANICAL LUGS; 316L STAINLESS-STEEL, ANTI-VIBRATION FASTENERS AND BLUE 'LOCTITE' OR EQUAL THREAD COMPOUND (MINIMUM 2 LOCATIONS)
10. MAN-WAY AND/OR EQUIPMENT HATCH FRAMES SHALL BE BONDED TO GROUNDING SYSTEM USING TINNED #2AWG COPPER; MECHANICAL LUGS; 316L STAINLESS-STEEL, ANTI-VIBRATION FASTENERS AND BLUE 'LOCTITE' OR EQUAL THREAD COMPOUND (MINIMUM 2 LOCATIONS)

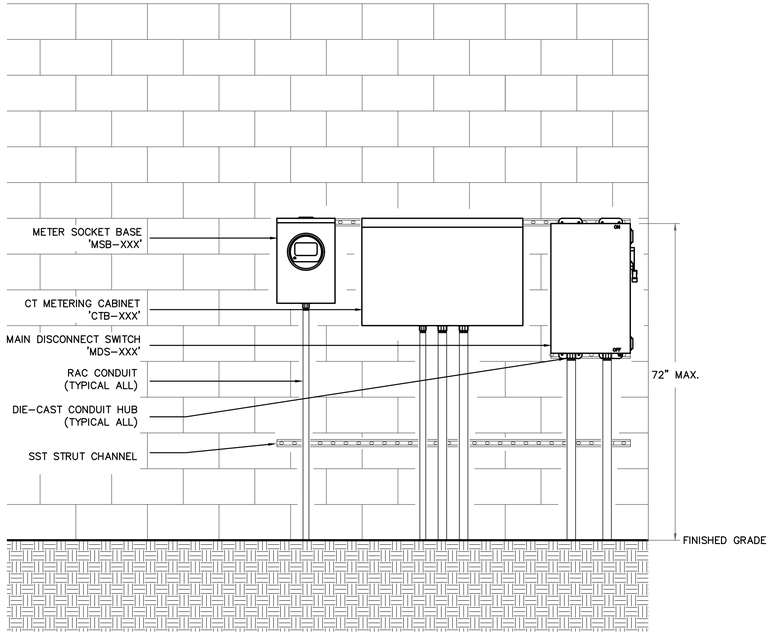

TYPICAL ELECTRICAL EQUIPMENT INSTALLATION DETAIL – EXTERIOR
SCALE: 3/4" = 1' – 0"

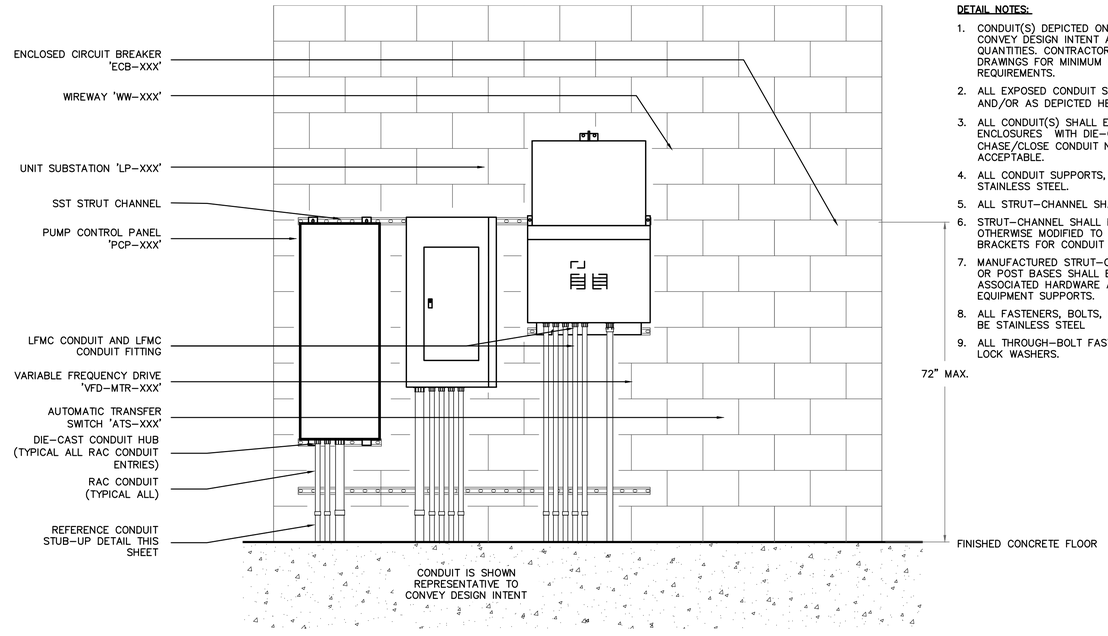

DETAIL NOTES:

1. CONDUIT(S) DEPICTED ON FRONT ELEVATIONS ARE SHOWN TO CONVEY DESIGN INTENT AND DO NOT DEPICT ACTUAL SIZES OR QUANTITIES. CONTRACTOR SHALL REFERENCE ALL CONTRACT DRAWINGS FOR MINIMUM CONDUIT AND CONDUCTOR REQUIREMENTS.
2. ALL EXPOSED CONDUIT SHALL BE RIGID ALUMINUM CONDUIT AND/OR AS DEPICTED HERE.
3. ALL CONDUIT(S) SHALL ENTER THE BOTTOM OR TOP OF ALL ENCLOSURES WITH DIE-CAST ALUMINUM CONDUIT HUBS – CHASE/CLOSE CONDUIT NIPPLES AND SIDE ENTRIES ARE NOT ACCEPTABLE.
4. ALL CONDUIT SUPPORTS, CLAMPS, HANGERS, ETC. SHALL BE STAINLESS STEEL.
5. ALL STRUT-CHANNEL SHALL BE STAINLESS-STEEL.
6. STRUT-CHANNEL SHALL NOT BE BENT, DRILLED, CUT OR OTHERWISE MODIFIED TO PRODUCE FITTINGS, BRACES OR BRACKETS FOR CONDUIT AND EQUIPMENT SUPPORTS.
7. MANUFACTURED STRUT-CHANNEL BRACES, BRACKETS, FITTINGS OR POST BASES SHALL BE PROVIDED AND INSTALLED WITH ASSOCIATED HARDWARE AND FASTENERS FOR CONDUIT AND EQUIPMENT SUPPORTS.
8. ALL FASTENERS, BOLTS, NUTS, SCREWS, WASHERS, ETC. SHALL BE STAINLESS STEEL
9. ALL THROUGH-BOLT FASTENINGS SHALL HAVE SST. FENDER AND LOCK WASHERS.

TYPICAL ELECTRICAL EQUIPMENT INSTALLATION DETAIL – INTERIOR
SCALE: 3/4" = 1' – 0"

REV.NO.	DESCRIPTION	DATE
C	ISSUED FOR BID - NOT FOR CONSTRUCTION	07 APR 2020
B	FINAL DESIGN - NOT FOR CONSTRUCTION	06 MAR 2020
A	PRELIMINARY DESIGN - NOT FOR CONSTRUCTION	10 JAN 2020

REVISIONS

NORTH CAROLINA PROFESSIONAL SEAL 041530 ENGINEER JASON A GILLENTINE 7 APR 2020

McKIM&CREED
Venture IV Building, Suite 500
1730 Varsity Drive
Raleigh, North Carolina 27606
Phone: (919) 233-8091, Fax: (919) 233-8031
NC License# F-1222
www.mckimcreed.com

COUNTY OF PENDER

PENDER COUNTY

ROCKY POINT/TOPSAIL WATER AND SEWER DISTRICT

HAMPSTEAD / SCOTT'S HILL WELL PROJECT

ELECTRICAL

TYPICAL INSTALLATION DETAILS

PROJ. START DATE:	2019.12
MCE PROJ. #	00542-0079
DRAWN	SN
DESIGNED	SN/JAG
CHECKED	JAG
PROJ. MGR.	SJK

SCALE
HORIZONTAL: N/A
VERTICAL: N/A

E7.0
DRAWING NUMBER
C
REVISION

STATUS: **ISSUED FOR BID NOT FOR CONSTRUCTION**

I:\00542\0079\WATER\80-DRAWINGS\ELECTRICAL\EH030_00542-0079.DWG 04/07/2020 12:56:43 JASON GILLENTINE

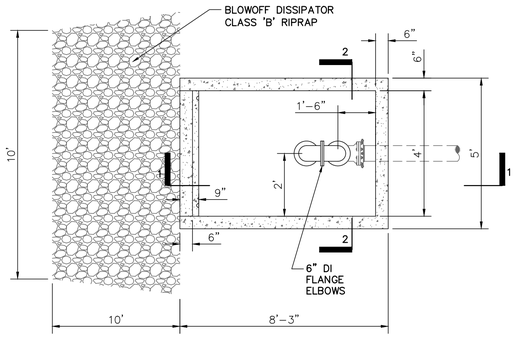

PLAN VIEW

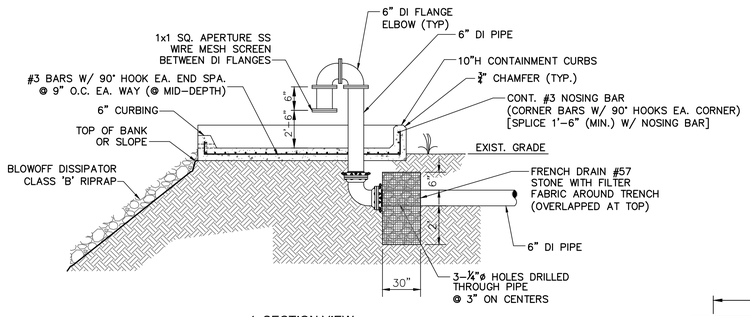

1. SECTION VIEW

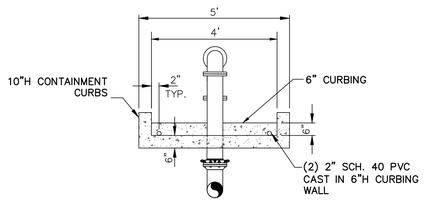

2. SECTION VIEW

BLOW-OFF ASSEMBLY

N.T.S.

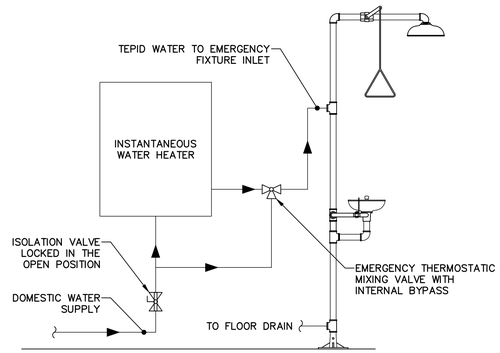

INTERIOR EYE WASH AND EMERGENCY SHOWER DETAIL

N.T.S.

DESIGN PARAMETERS
DEPTH OF BURY: 3 FT
SAFETY FACTOR: 2:1
TRENCH TYPE: 3 (PIPE BEDDING IN 4" LOOSE SOIL. BACKFILL LIGHTLY CONSOLIDATED TO TOP OF PIPE)
TEST PRESSURE: 200 PSI
SOIL TYPE :(CL,CH,SC,SM) TOPSOIL, INORGANIC CLAYS OF LOW, MODERATE, & HIGH PLASTICITY. SILTY & CLAYEY SAND. BACK FILLED USING NATIVE SOILS.

NOTE:
1. THE CONTRACTOR SHALL INSTALL RESTRAINED JOINT THRUST PROTECTION AT ALL BENDS, TEES, REDUCERS, VERTICAL OFFSETS. THE LENGTHS SHOWN BELOW ARE TYPICAL LENGTHS REQUIRED FOR THE DESIGN PARAMETERS SHOWN ABOVE. THESE RESTRAINING CONDITIONS ARE COMMON CONDITIONS ENCOUNTERED IN NORMAL PIPELINE CONSTRUCTION, ANY OTHER CONDITIONS SHALL BE BROUGHT TO THE ATTENTION OF THE PROJECT ENGINEER.
2. WHEN USING MECHANICAL JOINT RESTRAINTS SUCH AS MEGA-LUGS FOR PVC & DIP OR TR FLEX AND GRIFFIN SNAP-LOK, CONCRETE BLOCKING IS EXCLUDED FROM THE INSTALLATION.
3. THE RESTRAINED LENGTHS PROVIDED IN THE TABLE BELOW ARE MEASURED IN FEET AND SHALL BE APPLIED TO EACH SIDE OF THE SPECIFIED FITTING AS SHOWN IN THE DETAIL.

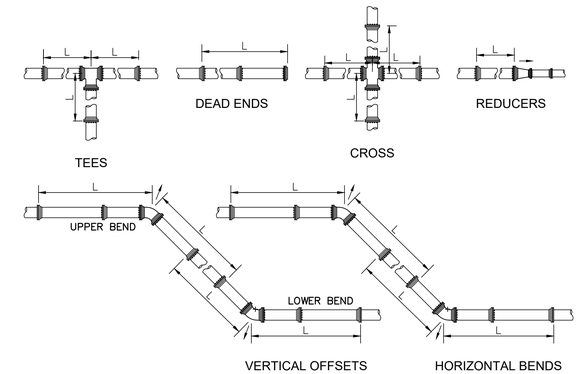

MINIMUM RESTRAINED PIPE LENGTHS (LINEAR FEET) TABLE

Main Pipe Diameter (inches)	Horizontal Bends (Degrees)				Tees	Reducers (Main Diameter x Reducer Diameter (inches)				Dead Ends	Vertical Offsets (All Bend Angles)	
	90	45	22.5	11.3		x6	x8	x10	x12		Upper	Lower
24	140	58	28	14	10	305	289	268	243	329	137	33
20	121	50	24	12	10	253	233	208	177	282	117	28
18	111	46	23	11	10	226	202	174	140	258	107	26
16	101	42	21	10	10	196	170	138	99	233	97	23
12	80	33	16	8	10	132	96	53		181	75	18
10	68	29	14	7	10	95	52			154	64	15
8	57	24	12	6	10	54				128	53	13
6	44	19	9	5	10					98	41	10
4	32	13	7	4	10					70	29	7
3	27	11	6	3	10					58	24	6

MECHANICAL JOINT RESTRAINT DETAILS

N.T.S.

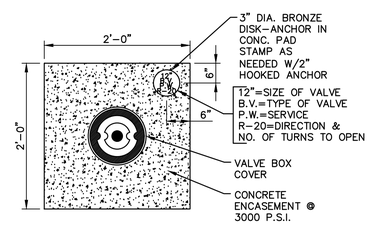

PLAN

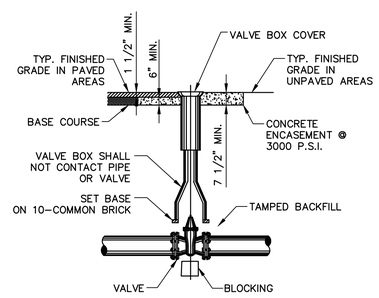

SECTION

NOTE: THE VALVE BOX SHALL BE CENTERED AND SET PLUMB WITH THE TOP OF THE BOX NEATLY TO GRADE OF THE SURFACE OF THE EXISTING GROUND, UNLESS OTHERWISE DIRECTED BY THE OWNER. SHOCK AND STRESS SHALL NOT BE TRANSFERRED FROM THE BOX TO THE VALVE. THE TOP OF THE OPERATING NUT SHALL BE NO MORE THAN 48-INCHES BELOW THE TOP RIM OF THE VALVE BOX (AS MEASURED FROM FINAL GRADE). THE CONTRACTOR SHALL INSTALL AN APPROVED VALVE STEM EXTENSION DEVICE WHERE NECESSARY TO COMPLY WITH THE 48-INCHES MAXIMUM DISTANCE.

VALVE BOX DETAIL

NOT TO SCALE

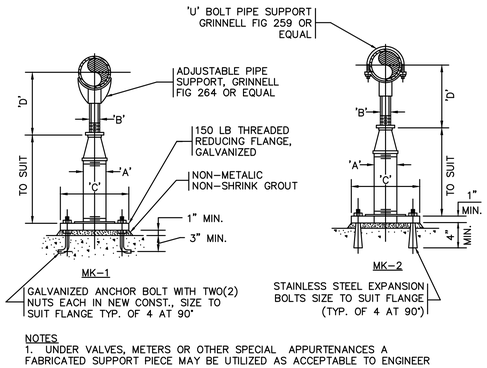

NOTES
1. UNDER VALVES, METERS OR OTHER SPECIAL APPURTENANCES A FABRICATED SUPPORT PIECE MAY BE UTILIZED AS ACCEPTABLE TO ENGINEER

ADJUSTABLE PIPE SUPPORT
APPROX DIMENSIONS IN INCHES

PIPE SIZE	A	B	C	D MIN	D MAX
3	2-1/2	1-1/2	9	8-1/4	11-3/4
4	3	2-1/2	9	10-1/4	14
6	3	2-1/2	9	11-5/8	15-1/4
8	3	2-1/2	9	13-5/8	16-1/2
10	3	2-1/2	9	14-5/8	18-1/4
12	3	2-1/2	9	15-5/8	19-3/4
14	4	3	11	18-7/8	20-3/4
16	4	3	11	19-7/8	22-1/4
18	6	3-1/2	13-1/2	21-1/4	24
20	6	3-1/2	13-1/2	23-1/4	25-1/2
24	6	4	13-1/2	26-1/2	28-1/4

ADJUSTABLE PIPE SUPPORT:

AS A CLARIFICATION THE CONTRACTOR SHALL PREPARE AND SUBMIT FOR APPROVAL BY THE ENGINEER PIPING SHOP DRAWINGS SHOWING THE LOCATION AND TYPE OF PIPE SUPPORTS PROPOSED. THE TYPE AND SPACING OF PIPE SUPPORTS SHALL BE DETERMINED AS APPROPRIATE FOR THE APPLICATION AND THE WEIGHT TO BE SUPPORTED. THE OPERATING WEIGHT ON ANY PIPE SUPPORT SHALL BE WITHIN THE DESIGN OPERATING WEIGHT OF THE PROPOSED PIPE SUPPORT AS DETERMINED BY THE MANUFACTURER OF THE SUPPORT. SUPPORTS SHALL BE PROVIDED WITHIN THE MAXIMUM RECOMMENDED SPAN FOR A GIVEN SIZE PIPE. SHOP DRAWINGS FOR THE PIPE SUPPORTS SHALL BE SUBMITTED THAT INDICATE THE RECOMMENDED MAXIMUM LOAD FOR THE PROPOSED PIPE SUPPORT. CALCULATIONS SHALL BE PREPARED TO DEMONSTRATE THAT THE APPLIED WEIGHT IS WITHIN THE MAXIMUM LOAD LIMIT.

ADJUSTABLE PIPE SUPPORT

N.T.S.

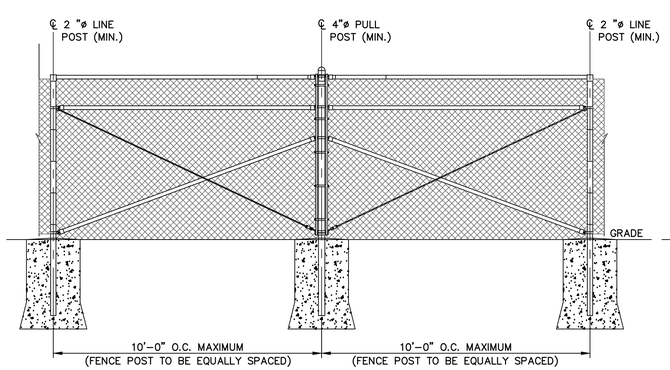

TYPICAL FENCE BRACE PANEL ELEVATION

N.T.S.

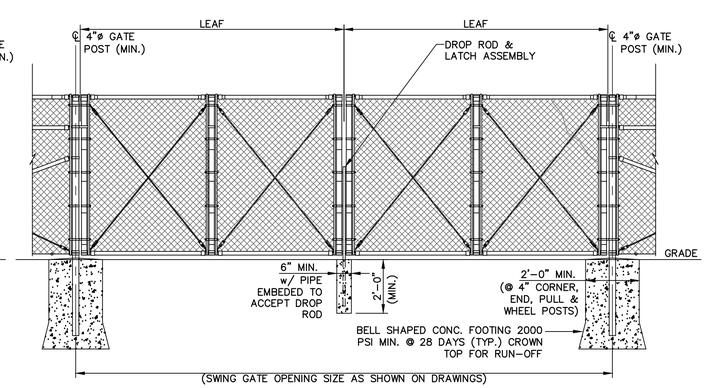

TYPICAL FENCE GATE ELEVATION

N.T.S.

REV.NO.	DESCRIPTION	DATE
C	ISSUED FOR BID - NOT FOR CONSTRUCTION	2020.04
B	FINAL DESIGN - NOT FOR CONSTRUCTION	2020.03
A	PRELIMINARY DESIGN - NOT FOR CONSTRUCTION	2019.12

REVISIONS

NORTH CAROLINA PROFESSIONAL SEAL 025512 ENGINEER ANTHONY W. BOARN 4-7-20

McKIM&CREED
Venture IV Building, Suite 500
1730 Varsity Drive
Raleigh, North Carolina 27606
Phone: (919) 233-8091, Fax: (919) 233-8031
NC License# F-1222
www.mckimcreed.com

PENDER COUNTY

ROCKY POINT/TOPSAIL
WATER AND SEWER DISTRICT

HAMPSTEAD / SCOTT'S HILL WELL PROJECT

DETAILS

DETAILS

PROJ. START DATE:	2019.12
MCE PROJ. #	00542-0079
DRAWN	MTN
DESIGNED	STM
CHECKED	SJK
PROJ. MGR.	SJK

SCALE
HORIZONTAL: N/A
VERTICAL: N/A

D01.0
DRAWING NUMBER
C
REVISION

STATUS: ISSUED FOR BID
NOT FOR CONSTRUCTION

NOTES:

1. FOR TRENCHES REQUIRING SHORING AND BRACING, DIMENSIONS SHALL BE TAKEN FROM THE INSIDE FACE OF THE SHORING AND BRACING.
2. NO ROCKS OR BOULDERS 2" OR LARGER TO BE USED IN TOP 6" OF INITIAL BACKFILL AND NONE 6" OR LARGER IN FINAL BACKFILL.
3. BACKFILL SHALL BE TAMPED IN 6" LIFTS IN TRAFFIC AREAS, 12" IN NON-TRAFFIC AREAS.
4. ACHIEVE 90% COMPACTION IN BEDDING, HAUNCHING AND INITIAL BACKFILL. SEE TECHNICAL SPECIFICATION SECTION 31 23 33 FOR COMPACTION REQUIREMENTS FOR ALL FILL.
5. CONTRACTOR SHALL UTILIZE METHODS NECESSARY TO MAIN A FULL 6" OF STONE OVER THE FRP PIPE FOLLOWING EXTRACTION OF TRENCH BOX AND/OR SHEETING.
6. CONTRACTOR SHALL ENSURE PIPE COUPLINGS/JOINTS ARE NOT DEFLECTED WHEN TWO PIPES ARE JOINED.

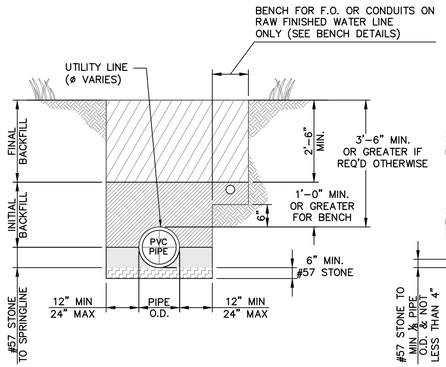

TRENCH DETAIL FOR PVC PIPE

w/ BENCH FOR ARMORED FIBER OPTIC CABLE OR CONDUITS
w/ RAW / FINISHED WATER MAIN ONLY
N.T.S.

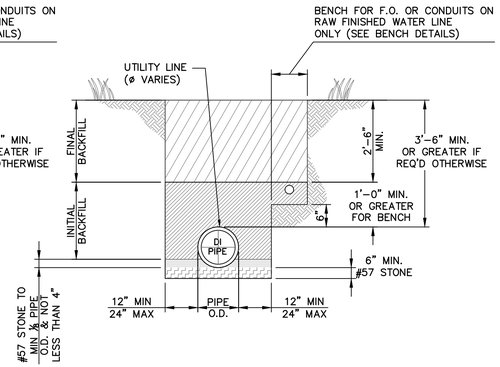

TRENCH DETAIL FOR DUCTILE IRON PIPE

w/ BENCH FOR ARMORED FIBER OPTIC CABLE OR CONDUITS w/ RAW / FINISHED WATER MAIN
N.T.S.

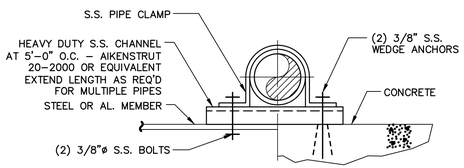

NOTE: USE THIS DETAIL FOR PIPING 2" & SMALLER ATTACHED TO CONCRETE SLAB, WALL, CEILING OR METAL FRAMING MEMBERS.

PIPE SUPPORT

N.T.S.

NOTES:
1. INTERIOR FLOOR DRAINS AND CLEANOUTS TO HAVE NICKEL BRONZE TOPS. EXTERIOR FLOOR DRAINS AND CLEANOUTS TO HAVE LACQUERED CAST IRON TOPS.

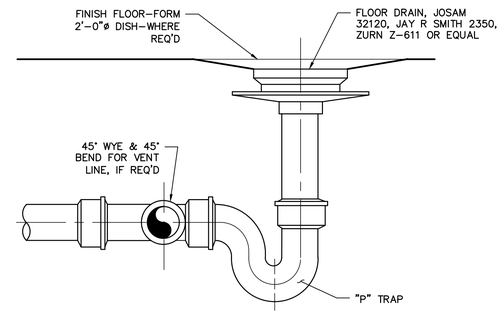

FLOOR DRAIN DETAIL

N.T.S.

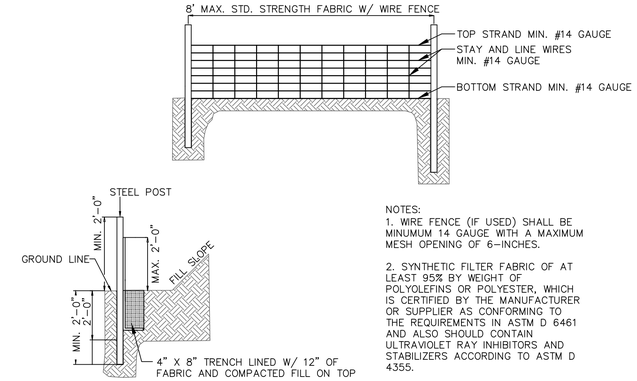

NOTES:
1. WIRE FENCE (IF USED) SHALL BE MINUMUM 14 GAUGE WITH A MAXIMUM MESH OPENING OF 6-INCHES.

2. SYNTHETIC FILTER FABRIC OF AT LEAST 95% BY WEIGHT OF POLYOLEFINS OR POLYESTER, WHICH IS CERTIFIED BY THE MANUFACTURER OR SUPPLIER AS CONFORMING TO THE REQUIREMENTS IN ASTM D 6461 AND ALSO SHOULD CONTAIN ULTRAVIOLET RAY INHIBITORS AND STABILIZERS ACCORDING TO ASTM D 4355.

3. SEE THE NC EROSION CONTROL MANUAL FOR SPECIFICATIONS INSTALLING SEDIMENT FENCE USING THE SLICING METHOD MACHINERY.

TEMPORARY SILT FENCE

N.T.S.

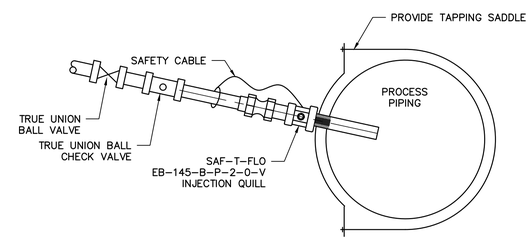

CHEMICAL INJECTION QUILL DETAIL

N.T.S.

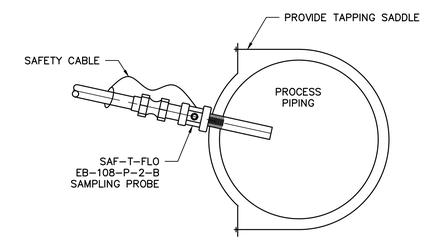

SAMPLING PROBE DETAIL

N.T.S.

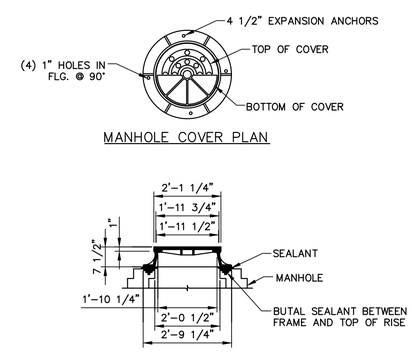

PRE-CAST MANHOLE DETAILS

NOT TO SCALE

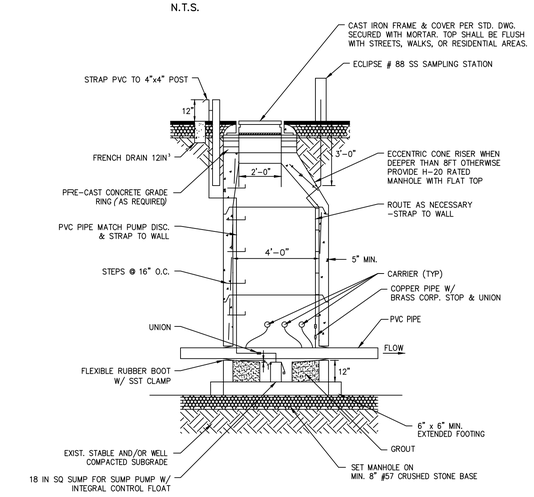

PRECAST CONCRETE MANHOLE
DETAIL S-1

REV NO.	DESCRIPTION	DATE
C	ISSUED FOR BID - NOT FOR CONSTRUCTION	2020.04
B	FINAL DESIGN - NOT FOR CONSTRUCTION	2020.03
A	PRELIMINARY DESIGN - NOT FOR CONSTRUCTION	2019.12

REVISIONS

NORTH CAROLINA PROFESSIONAL SEAL 025512 ENGINEER ANTHONY W. BOAHN 4-1-20

McKIM&CREED
Venture IV Building, Suite 500
1730 Varsity Drive
Raleigh, North Carolina 27606
Phone: (919) 233-8091, Fax: (919) 233-8031
NC License# F-1222
www.mckimcreed.com

COUNTY OF PENDER

PENDER COUNTY

ROCKY POINT/TOPSAIL WATER AND SEWER DISTRICT

HAMPSTEAD / SCOTT'S HILL WELL PROJECT

DETAILS

DETAILS

PROJ. START DATE:	2019.12
MCE PROJ. #	00542-0079
DRAWN	MTN
DESIGNED	STM
CHECKED	SJK
PROJ. MGR.	SJK

SCALE
HORIZONTAL: N/A
VERTICAL: N/A

D02.0
DRAWING NUMBER
C
REVISION

STATUS: ISSUED FOR BID NOT FOR CONSTRUCTION

I:\00542\0079\WATER\80-DRAWINGS\DETAILS\D01.0-005420079.DWG 04/21/2020 08:26:57 MORGAN NORVILLE

PCU STANDARD NOTES

1. A PRECONSTRUCTION MEETING IS REQUIRED BEFORE BEGINNING WORK. THE MEETING MUST BE SCHEDULED WITH PENDER COUNTY UTILITIES (PCU) AT LEAST ONE WEEK IN ADVANCE. ATTENDEES MUST INCLUDE PCU, THE SELECTED CONTRACTOR'S SUPERINTENDENT, THE SUPPLIER, AND THE CONSULTING ENGINEER.
2. ALL MATERIALS USED SHALL CONFORM TO PENDER COUNTY UTILITIES REQUIREMENTS. NON-CONFORMING MATERIAL WILL NOT BE ACCEPTED FOR FINAL CERTIFICATION.
3. ALL PIPE SHALL BE PVC. PVC PIPE WITHIN A CASING TO BE C900 DR 18 (SEE PCU STANDARD DETAIL). ALL OTHER PVC PIPE TO BE SDR 21. THE USE OF DIP PIPE IS NOT ALLOWED. PCU MUST APPROVE THE USE OF DIP IN THE FIELD BEFORE INSTALLATION AND ONLY WHEN THERE ARE NO OTHER OPTIONS.
4. PCU STANDARD WATERLINE PIPE RESTRAINING METHOD IS MJ GRIP RINGS. AT A MINIMUM ALL FITTINGS, VALVES, ETC. MUST BE RESTRAINED. (SEE PCU STANDARD DETAIL).
5. PCU MUST INSPECT CASING INSTALLATIONS PRIOR TO BACK-FILL. PCU MUST WITNESS PRESSURE TESTS, AND WITHDRAWAL OF BACTERIOLOGICAL SAMPLES. CONTACT BOB FORAND TO SCHEDULE 910-259-0212.
6. CLOSE-OUT DOCUMENTS WHICH MUST BE RECEIVED PRIOR TO PCU SIGNING THE NC PWSS APPLICANT CERTIFICATION INCLUDE: BACTERIOLOGICAL TESTS, PRESSURE TESTS, DEED OF DEDICATION, AFIDAVIT/RELEASE OF LIENS, WARRANTY, AND RECORD DRAWINGS (PDF & CAD).
7. AN 18 MONTH WARRANTY PERIOD APPLIES TO ALL WATERLINE CONSTRUCTION. THIS WARRANTY PERIOD DOES NOT BEGIN UNTIL FINAL APPROVAL OF THE SYSTEM HAS BEEN RECEIVED FROM NC PWSS.

PENDER COUNTY UTILITIES
605 EAST FREMONT STREET
BURGAW, NC 28425

STANDARD NOTES
PCU WATER SYSTEMS
VERSION #1 - OCTOBER 2015

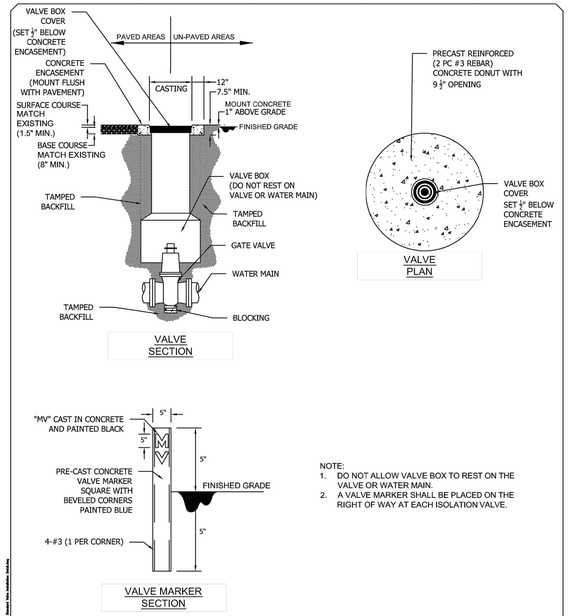

NOTE:
1. DO NOT ALLOW VALVE BOX TO REST ON THE VALVE OR WATER MAIN.
2. A VALVE MARKER SHALL BE PLACED ON THE RIGHT OF WAY AT EACH ISOLATION VALVE.

VALVE INSTALLATION DETAIL
NOT TO SCALE

PENDER COUNTY UTILITIES
605 EAST FREMONT STREET
BURGAW, NC 28425

VALVE INSTALLATION
STANDARD DETAIL
VERSION #3 - JUNE 2016

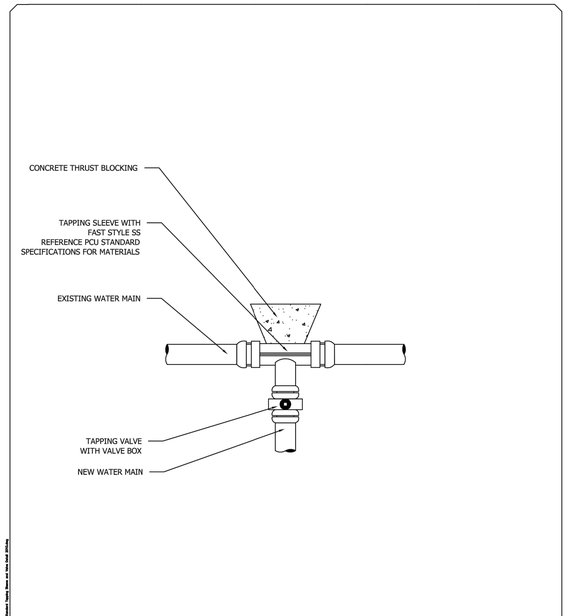

TAPPING SLEEVE AND VALVE ASSEMBLY DETAIL
NOT TO SCALE

PENDER COUNTY UTILITIES
605 EAST FREMONT STREET
BURGAW, NC 28425

TAPPING SLEEVE AND VALVE ASSEMBLY
STANDARD DETAIL
VERSION #3 - FEB 2016

Restrained Length In Feet Each Side of Fitting Joint

PIPE DIAMETER (INCHES)	D. I. P.				P. V. C.			
	90°	45°	22 1/2°	11 1/4°	90°	45°	22 1/2°	11 1/4°
3"	30'	15'	10'	5'	40'	20'	10'	5'
4"	35'	15'	10'	5'	55'	25'	15'	10'
6"	55'	25'	10'	5'	80'	35'	20'	10'
8"	65'	30'	15'	10'	90'	40'	20'	10'
10"	80'	35'	20'	10'	110'	50'	25'	15'
12"	95'	40'	20'	10'	130'	55'	30'	15'
16"	120'	50'	25'	15'	165'	70'	35'	20'
20"	150'	65'	30'	15'	200'	85'	40'	20'
24"	180'	70'	35'	20'	210'	90'	45'	25'
30"	190'	80'	40'	20'	250'	105'	50'	25'
36"	220'	95'	45'	25'	0	0	0	0
42"	245'	105'	50'	25'	0	0	0	0
48"	260'	120'	60'	30'	0	0	0	0

Restrained lengths for valves, dead ends and branches from tees shall be the same as for 90° (degree) bends

Restrained Length In Feet For Reducer

PIPE DIAMETER (INCHES)	3"	4"	6"	8"	10"	12"	16"	20"	24"	30"
3"	0	0	0	0	0	0	0	0	0	0
4"	40'	0	0	0	0	0	0	0	0	0
6"	50'	45'	0	0	0	0	0	0	0	0
8"	75'	70'	40'	0	0	0	0	0	0	0
10"	95'	90'	70'	40'	0	0	0	0	0	0
12"	120'	115'	100'	75'	40'	0	0	0	0	0
16"	160'	155'	140'	125'	100'	70'	0	0	0	0
20"	200'	195'	185'	170'	150'	130'	75'	0	0	0
24"	160'	155'	150'	140'	135'	120'	90'	50'	0	0
30"	195'	190'	185'	180'	170'	160'	120'	105'	70'	0
36"	225'	220'	215'	210'	205'	195'	180'	150'	125'	70'
42"	245'	240'	235'	230'	225'	220'	205'	180'	155'	105'
48"	255'	250'	245'	240'	235'	230'	215'	195'	175'	125'

Length of restrained joint for larger diameter pipe

NOTES:
1. PENDER COUNTY STANDARD RESTRAINT METHOD IS MJ "GRIP RING" TYPE. ALL RJ TO BE MJ "GRIP RING" TYPE, UNLESS SPECIFICALLY APPROVED BY PCU IN WRITING.
2. ALL FITTINGS AND JOINTS SHALL BE RESTRAINED JOINT.
3. "L" ABOVE IS GIVEN IN FEET FROM FITTING JOINT.

PENDER COUNTY UTILITIES
605 EAST FREMONT STREET
BURGAW, NC 28425

RESTRAINED JOINT TABLE
STANDARD DETAIL
VERSION #1 - OCTOBER 2015

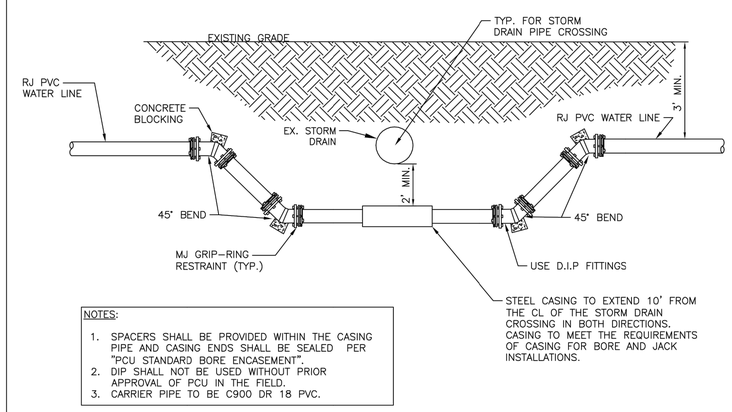

NOTES:
1. SPACERS SHALL BE PROVIDED WITHIN THE CASING PIPE AND CASING ENDS SHALL BE SEALED PER "PCU STANDARD BORE ENCASEMENT".
2. DIP SHALL NOT BE USED WITHOUT PRIOR APPROVAL OF PCU IN THE FIELD.
3. CARRIER PIPE TO BE C900 DR 18 PVC.

PIPE CROSSING "A" DETAIL
NOT TO SCALE

PENDER COUNTY UTILITIES
605 EAST FREMONT STREET
BURGAW, NC 28425

PIPE CROSSING "A"
STANDARD DETAIL
VERSION #1 - SEPTEMBER 2015

NOTE:
1. ALL PVC SHALL BE RESTRAINED PER THE RESTRAINED LENGTH SCHEDULE PROVIDED ELSEWHERE.
2. A BLOW OFF MARKER SHALL BE PLACED ON THE RIGHT OF WAY AT EACH BLOW.
3. BLOW OFF MARKER TO BE SAME DESIGN AS VALVE MARKER EXCEPT DENOTE "BO" ON MARKER RATHER THAN "MV"

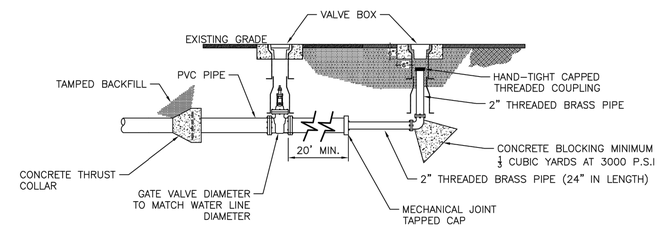

TEMPORARY BLOW-OFF ASSEMBLY DETAIL
NOT TO SCALE

PENDER COUNTY UTILITIES
605 EAST FREMONT STREET
BURGAW, NC 28425

TEMPORARY BLOW-OFF ASSEMBLY
STANDARD DETAIL
VERSION #1 - SEPTEMBER 2015

NOTE:
1. A BLOW OFF MARKER SHALL BE PLACED ON THE RIGHT OF WAY AT EACH BLOW.
2. BLOW OFF MARKER TO BE SAME DESIGN AS VALVE MARKER EXCEPT DENOTE "BO" ON MARKER RATHER THAN "MV"

NOTES:
1. ALL PVC SHALL BE RESTRAINED PER THE RESTRAINED LENGTH SCHEDULE PROVIDED ELSEWHERE.

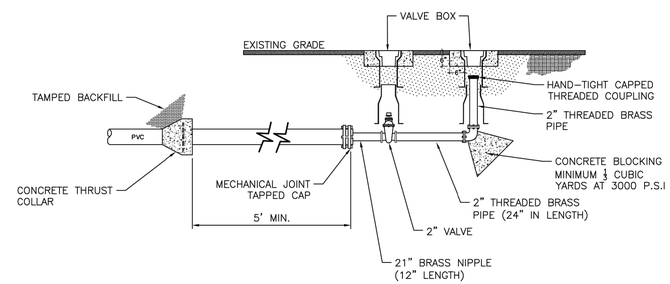

PERMANENT BLOW-OFF ASSEMBLY DETAIL
NOT TO SCALE

PENDER COUNTY UTILITIES
605 EAST FREMONT STREET
BURGAW, NC 28425

PERMANENT BLOW-OFF ASSEMBLY
STANDARD DETAIL
VERSION #1 - SEPTEMBER 2015

REV NO.	DESCRIPTION	DATE
C	ISSUED FOR BID - NOT FOR CONSTRUCTION	2020.04
B	FINAL DESIGN - NOT FOR CONSTRUCTION	2020.03
A	PRELIMINARY DESIGN - NOT FOR CONSTRUCTION	2019.12

REVISIONS

NORTH CAROLINA PROFESSIONAL SEAL 025512 ENGINEER ANTHONY W. BOAHN 4-7-20

McKIM&CREED
Venture IV Building, Suite 500
1730 Varsity Drive
Raleigh, North Carolina 27606
Phone: (919) 233-8091, Fax: (919) 233-8031
NC License# F-1222
www.mckimcreed.com

COUNTY OF PENDER

PENDER COUNTY
ROCKY POINT/TOPSAIL WATER AND SEWER DISTRICT

HAMPSTEAD / SCOTT'S HILL WELL PROJECT

DETAILS
PENDER COUNTY UTILITIES - STANDARD DETAILS

PROJ. START DATE:	2019.12
MCE PROJ. #	00542-0079
DRAWN	MTN
DESIGNED	STM
CHECKED	SJK
PROJ. MGR.	SJK

SCALE
HORIZONTAL: N/A
VERTICAL: N/A

D03.0
DRAWING NUMBER
C
REVISION

STATUS: ISSUED FOR BID NOT FOR CONSTRUCTION

I:\00542\0079\WATER\80-DRAWINGS\DETAILS\D01.0-005420079.DWG 04/21/2020 08:26:59 MORGAN NORVILLE